SHEET OF

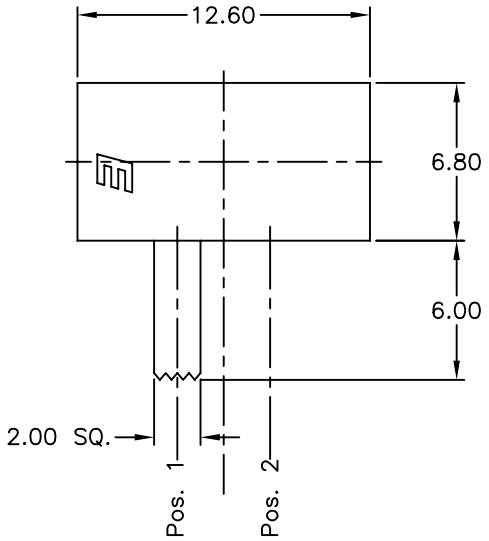

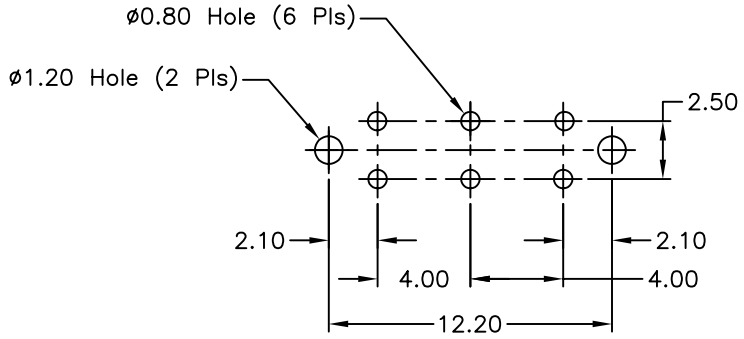

RECOMMEND P.C.B. LAYOUT

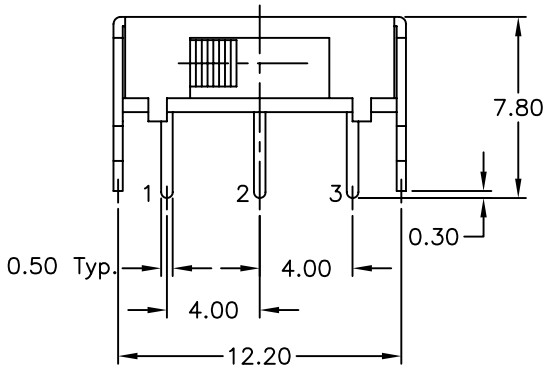

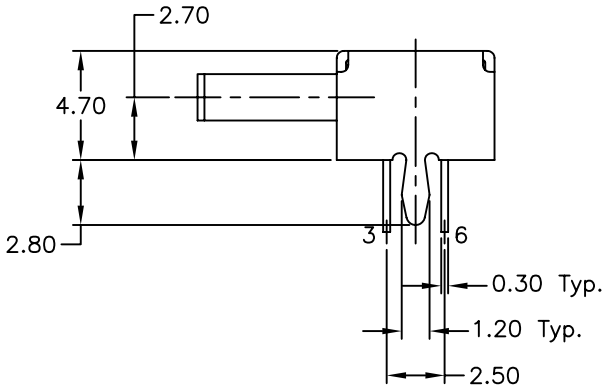

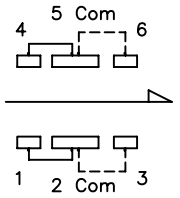

CIRCUIT: DPDT
CONTACT CONFIGURATION

SWITCH FUNCTION	
POS. 1	POS. 2
2-1,5-4	2-3,5-6

NOTES:

1. ALL DIMENSIONS IN MM
2. GENERAL TOLERANCE: 0.0=±0.4
   0.00=±0.25
3. TERM. NOS. FOR REF. ONLY
4. RATING: 0.2A, @30V DC
5. OPERATING FORCE: 200±100gf
6. TRAVEL TO MAKE: 4.00mm

REV.	ECN No.	DESCRIPTION	DATE	CHKD
A	10001	RELEASED FOR PRODUCTION		

THE INFORMATION CONTAINED IN THIS DOCUMENT IS PROPRIETARY TO E-SWITCH AND IS NOT TO BE COPIED OR TRANSFERRED

E-SWITCH®

TITLE: EG 2210

SCALE	DATE	DR	DWG	REV
3:1	10/21/98	MM	P040130	A

Mouser Electronics

Authorized Distributor

Click to View Pricing, Inventory, Delivery & Lifecycle Information:

E-Switch:

EG2210