KA2206

DATASHEET

Specification Revision History:

Version	Date	Description
V1.0	2020/04	New
V1.1	2021/02	Modify Ordering Information
V1.2	2023/02	Modify Ordering Information
V1.3	2024/03	Add application precautions and overall typesetting.

Description

The KA2206 is a monolithic integrated circuit consisting of a 2-channel power amplifier.It is suitable for stereo and bridge amplifier application of radio cassette tape recorder.

KA2206 is available in HDIP12 package.

FEATURES

· High output power

Stereo:Po=2.3W(Typ)at Vcc=9V,RL=4Ω

Bridge:Po=4.7W(Typ)at Vcc=9V,RL=8Ω

· Low switching distortion at high frequency.

· Small shock noise at the time of power on/off due to a built-in muting circuit

· Good ripple rejection due to a built-in ripple filter.

· Good channel separation.

· Soft tone at the time of output saturation.

· Closed loop voltage gain fixed 45dB (Bridge:51dB)but availability with external resistor added.

· Minimum number of external parts required.

· Easy to design radiator fin

The appearance of the product



HDIP-12

Ordering Information

Product Model	Package Type	Marking	Packing	Packing Qty
KA2206BID	HDIP-12	KA2206B C05	TUBE	1000PCS/BOX
KA2206	HDIP-12	KA2206	TUBE	1000PCS/BOX

Block Diagram and Pin Connection

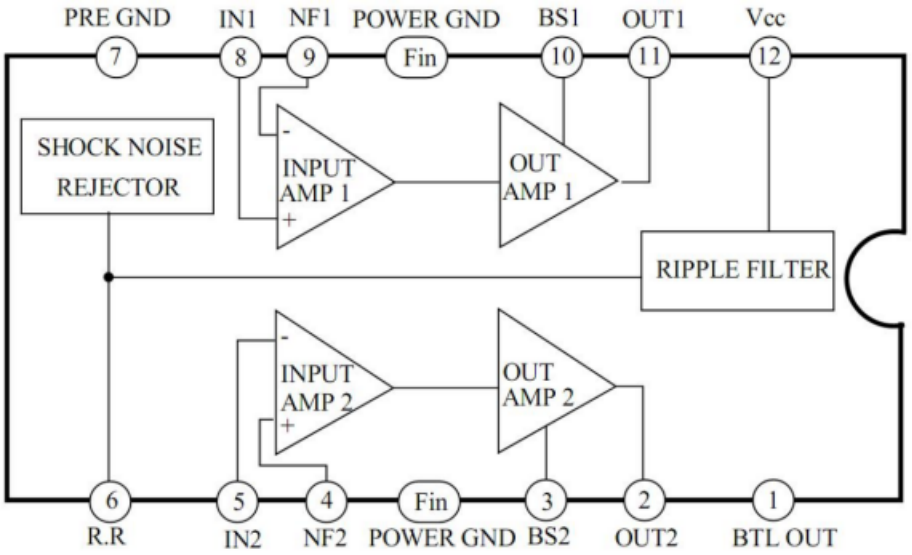

Absolute Maximum Ratings (Tamb=25℃)

Characteristic	Symbol	Value	Unit
Supply Voltage	Vcc	15	V
Out Peak Currentt	Io	1.5	A
Operating Temperature	Topr	-25~85	℃
Storage Temperature	Tstg	-40~150	℃

*Fin is soldering on the PCB

Electrical Characteristics

(Unless otherwise specified:Ta=25°C,Vcc=9V;Rg=600Ω,f=1kHz)

Characteristics	Test conditions		Symbol	Min.	Typ.	Max.	Unit
Operating Supply Voltage			Vcc		9	11	V
Quiescent Current	Vi=0V,Stereo		IccQ		40	55	mA
Closed Loop Voltage Gain	Stereo	Vi=-45dBm	Gvc	43	45	47	dB
	Bridge			49	51	53	
Channel Balance	Stereo		CB	-1	0	+1	dB
Output Power	Stereo	THD=10%,R_L=4Ω	Po	1.7	2.3		W
		THD=10%,R_L=8Ω			1.3		
	Bridge	THD=10%,R_L=8Ω			4.7		
Total Harmonic Distortion	Stereo	Po=250Mw,RL=4Ω	THD		0.3	1.5	%
	Bridge				0.5		
Input Resistance			Ri	21	30		kΩ
Ripple Rejection Ratio	Stereo,Rg=0Ω,Vi=150mW,f=100Hz		RR	40	46		dB
Output Noise Voltage	Stereo Rg=0Ω		Vno		0.3	1.0	mV
	Stereo Rg=10kΩ				0.5	2.0	
Cross Talk	Stereo Rg=10kQ,Vo=0dBm		CT	40	55		dB

Bridge Amplifier Test and Application Circuit

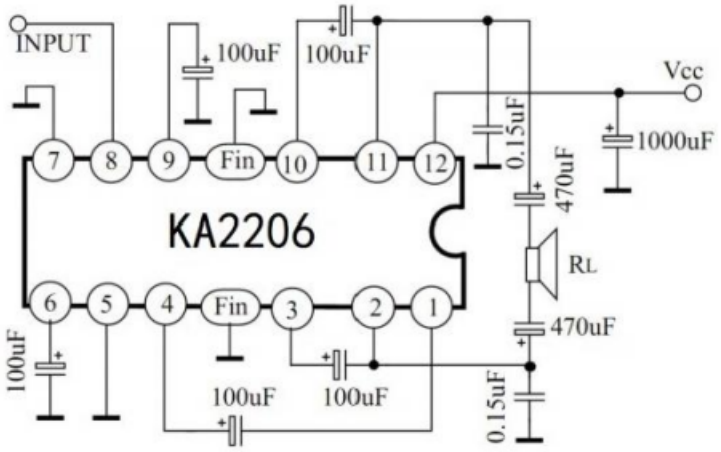

Application Information

1.Stereo application

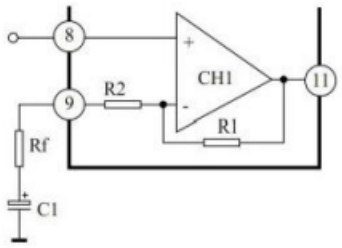

(1)Fixed Voltage gain

(Pin 9 connected to GND directly) Gv=20 log(R1/R2)

(2)Variable voltage gain

(Rf and C,Connected with pin 9) Gv=20 log(R1/(R2+Rf)

2.Bridge application

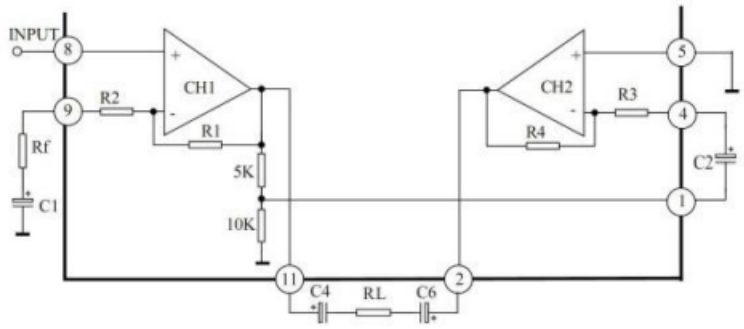

(1)Fixed voltage gain(pin 9 connected to GND directly) Gv=20log(R1/R2)

(2)Variable voltage gain Rf and C1 connected with pin 9 Gv=20 log(R1/(R2+Rf))

Outline Drawing

HDIP-12: **Unit:mm**

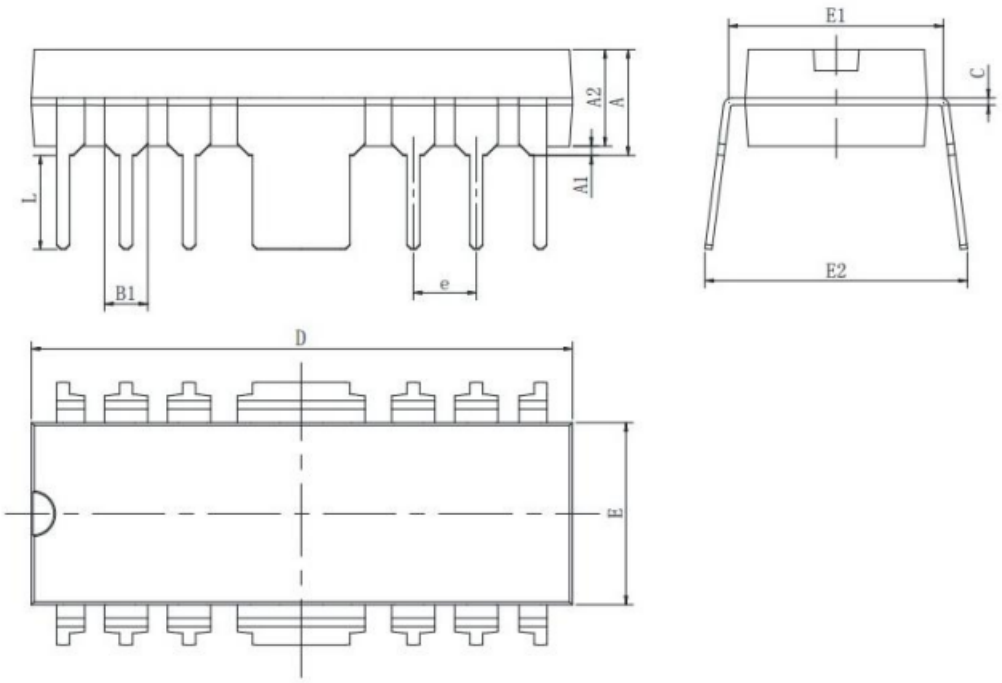

Symbol	Dimensions In Millimenters		Dimensions In Inches	
	Min	Max	Min	Max
A	3.710	4.310	0.146	0.170
A1	0.510		0.020	
A2	3.200	3.600	0.126	0.142
B	0.330	0.510	0.013	0.020
B1	1.524(BSC)		0.060(BSC)	
C	0.204	0.360	0.008	0.014
D	18.800	19.200	0.740	0.756
E	6.200	6.600	0.244	0.260
E1	7.320	7.920	0.288	0.312
e	2.540(BSC)		0.100(BSC)	
L	3.000	3.600	0.118	0.142
E2	7.800	9.000	0.307	0.354

Important Notice:

- Green Micro chip reserves the right to change products and documents without notice. Customers should obtain and verify the completeness of the latest technical information before placing orders. Meanwhile, Green Micro chip shall not assume any responsibility or obligation for non-officially revised documents.

- Any parameters in the entire product specification are for reference only, and actual application testing shall prevail. When customers use the products for system design, they must comply with safety regulations and independently assume the following responsibilities: selecting suitable Green Micro chip products according to application requirements; completing design verification and full-link testing of the application; and ensuring that the application complies with safety regulations or other requirements of the target market. Customers shall bear all personal or property losses caused by design defects or illegal operations, which shall have no relation to Green Micro chip.

- Green Micro chip products are prohibited from being used in scenarios such as life support, military equipment, and key aerospace applications. All accidents and legal liabilities arising from out-of-scope use shall be borne by the user, and Green Micro chip shall not be held responsible.

- All technical resources of Green Micro chip (including data sheets and reference designs) are provided "as is", without guarantee of no defects or universality, and without any express or implied warranties. The documents are only authorized for product development and research described in this document. Unauthorized use of intellectual property, public reproduction, and reverse engineering are strictly prohibited. All claims and losses caused by illegal use shall be borne by the user, and Green Micro chip shall not be liable.