650V 54mΩ SolidGaN with DESAT Protection

1. Features

- 54mΩ E-Mode GaN with Integrated Gate Clamp
- 650V Continuous, 800V Transient Voltage Rating
- Wide 10V to 24V Gate Input Voltage Range
- Adjustable Turn-On and Turn-Off Slew Rate by External Gate Resistors
- Accurate LDO-Based Integrated Gate Clamp to Protect GaN Device
- Integrated Miller Clamp for dv/dt-Induced Shoot-Through Protection: dv/dt Immunity up to 200V/ns
- Paralleling Capability
- Zero Reverse Recovery Charge
- High Frequency Operation up to 2MHz
- Built-In DESAT, Input UVLO, and OTP Protection
- Available in TOLL-4L Package

2. Applications

- High-Power Switch-Mode Power Supplies
- AC-DC, DC-DC, DC-AC Converters
- Half-Bridge and Full-Bridge Converters
- TV Power, Air Conditioner Power
- Solar Micro Inverter, Motor Drive, OBC

3. Description

The ISG6124 SolidGaN IC seamlessly integrates a 650V E-Mode GaN FET with advanced features, setting a new standard for performance, easy-of-use, and reliability in power electronics. The integrated gate clamp, driven by an accurate LDO-based circuitry, maintains a tightly regulated driving voltage for the GaN FET within a flexible gate-input voltage range of 10V to 24V, ensuring full protection of the GaN power transistor against excessive voltage stress while maximizing GaN performance.

Equipped with built-in protections including DESAT protection, Input UVLO, and OTP, the ISG6124 further ensures device robustness and system safety. The integrated miller clamp prevents false turn-ons caused by the high dv/dt slope of the drain voltage.

The ISG6124 offers users the ability to adjust the turn-on and turn-off slew rate of the GaN FET using external gate resistors. This feature optimizes both electromagnetic interference (EMI) and switching loss.

The ISG6124's high integration level with a GaN FET and robust protections, makes it suitable for a range of applications, from simple setups with low component counts to high-frequency and high-power applications.

4. Typical Application

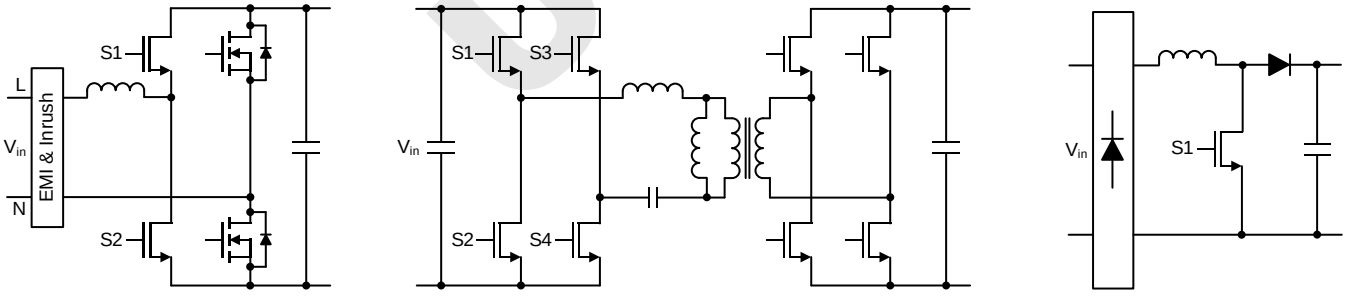

Totem Pole PFC　　LLC or CLLC　　Boost PFC

Confidential For use only 禾川

Table of contents

1. Features 1
2. Applications 1
3. Description 1
4. Typical Application 1
5. Revision history 2
6. Pin Configuration and Functions 3
7. Absolute Maximum Ratings 4
8. ESD Ratings 4
9. Recommended Operating Conditions 4
10. Thermal Information 4
11. Electrical Characteristics 5
12. Switching Characteristics 5
13. Typical Characteristics 6
14. Block Diagram 7
15. Function Description 8
16. Package Information 9
17. Tape and Reel Information 10
18. Recommended Land Pattern 10
19. Order Information 10

5. Revision history

Major changes since the last revision

Revision	Date	Description of changes
0.1	2024-01-08	Preliminary datasheet

Confidential 英诺赛科 For Use Only

6. Pin Configuration and Functions

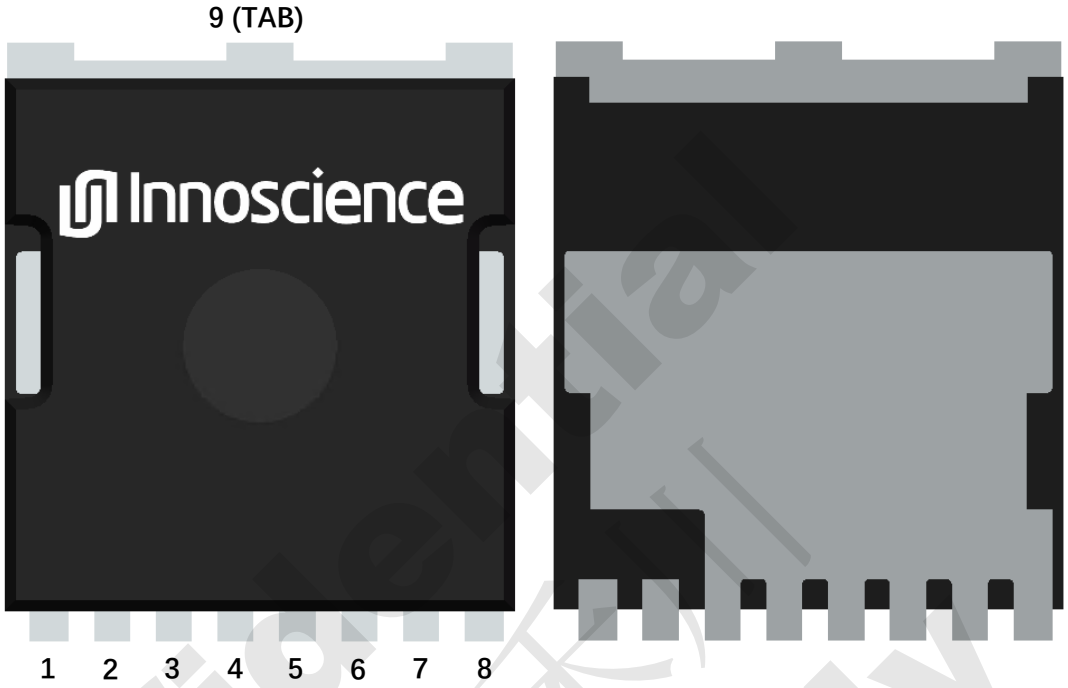

4-Lead TOLL Package – Top and Bottom View

Pin Number	Pin Name	Description
9 (TAB)	D	Drain of Power GaN FET.
1-6	S	Source of Power GaN FET.
7	K	Kelvin Source.
8	G	Gate Input. Connect to the drive output of controller or gate driver.

Confidential For Use Only

7. Absolute Maximum Ratings

All pins are referred to S pins, unless otherwise specified. Stress beyond the absolute maximum ratings can cause permanent damage or deteriorate device lifetime.

Parameter	Min	Max	Unit
Drain Voltage, Continuous	-7	650	V
Drain Voltage, Transient (1)		800	V
Drain Voltage, Pulsed (2)		750	V
Drain Current, Continuous (T_C = 25°C)		24	A
Drain Current, Continuous (T_C = 125°C)		16	A
Drain Current, Pulsed (10us @ T_C = 25°C)		42	A
Drain Current, Pulsed (10us @ T_C = 125°C)		21	A
Gate Input Voltage	-0.3	27	V
Drain-to-Source Slew Rate – dV/dt		200	V/ns
Operating Junction Temperature T_J	-55	150	˚C
Storage Temperature	-55	150	˚C

(1) $V_{DS(TRAN)}$ is intended for non-repetitive events, t_{PULSE} < 200us.

(2) $V_{DS(PULS)}$ is intended for repetitive events, t_{PULSE} < 100ns.

8. ESD Ratings

T_J = 25°C unless otherwise specified.

Parameter	Value	Unit
Human Body Model (HBM), per ANSI/ESDA/JEDEC JS-001	±2000	V
Charged Device Model (CDM), per ANSI/ESDA/JEDEC JS-002	±1000	V

9. Recommended Operating Conditions

Parameter	Min	Max	Unit
Drain Voltage	-5	520	V
Gate Input High Voltage	10	24	V
Gate Input Low Voltage	-0.3	0.3	V

10. Thermal Information

Symbol	Parameter	ISG6124TA	Unit
$R_{\theta JA}$	Thermal Resistance, Junction to Ambient	40	˚C/W
$R_{\theta JC}$	Thermal Resistance, Junction to Case	0.3	˚C/W

Confidential 禾川 For Use Only

11. Electrical Characteristics

T_J = 25°C, V_{GS} = 15V, V_{DS} = 400V, I_{DS} = 30A, unless otherwise noted.

Parameter	Symbol	Min	Typ	Max	Unit	Test Condition
Gate Characteristics						
Gate input threshold voltage	$V_{G(TH)}$		4		V	Gate Rising
Gate quiescent current	I_{G_Q}		1800		uA	V_{GS} = 15V, V_{DS} = 0V
Gate turn-on peak current (3)	I_{GON_PK}		1.4		A	V_{GS} = 15V
Miller clamp pull-down Resistance (3)	R_{GOFF_MC}		0.5		Ω	V_{GS} = 0V
Protection						
DESAT protection threshold (3)	V_{D_DESAT}		7.3		V	
DESAT blanking time	t_{BLK_DESAT}		300		ns	
Gate UVLO threshold	V_{G_UVLO}		8.5		V	
Over temperature threshold (3)	T_{OTP}		160		°C	
Over temperature hysteresis (3)	T_{HYS}		20		°C	
Power GaN FET						
Drain-source leakage current	I_{DSS}		6	78	uA	V_{DS} = 650V, V_{GS} = 0V
Drain-source resistance	$R_{DS(ON)}$		54	70	mΩ	V_{GS} = 15V, I_{DS} = 16A
Source-drain reverse voltage	V_{SD}		4		V	V_{GS} = 0V, I_{SD} = 16A
Output charge (3)	Q_{OSS}		TBA		nC	V_{DS} = 400V, V_{GS} = 0V
Reverse recovery charge (3)	Q_{RR}		0		nC	
Output capacitance (3)	C_{OSS}		84		pF	V_{DS} = 400V, V_{GS} = 0V
Effective output capacitance, energy related (3)	$C_{O(er)}$		125		pF	V_{DS} = 400V, V_{GS} = 0V
Effective output capacitance, time related (3)	$C_{O(tr)}$		179		pF	V_{DS} = 400V, V_{GS} = 0V

12. Switching Characteristics

T_J = 25°C, V_{GS} = 15V, V_{DS} = 400V, I_{DS} = 30A, unless otherwise noted.

Parameter	Symbol	Min	Typ	Max	Unit	Test Condition
Minimum input pulse width that changes the output (3)	t_{GH_PW}		10		ns	
Turn-on propagation delay (3)	t_{ON_PD}		25		ns	
Turn-off propagation delay (3)	t_{OFF_PD}		15		ns	
Minimum on time (3)			40		ns	

(3) Not 100% tested and guaranteed by design.

Confidential For Use Only

13. Typical Characteristics

Confidential
For 禾川
Use Only

14. Block Diagram

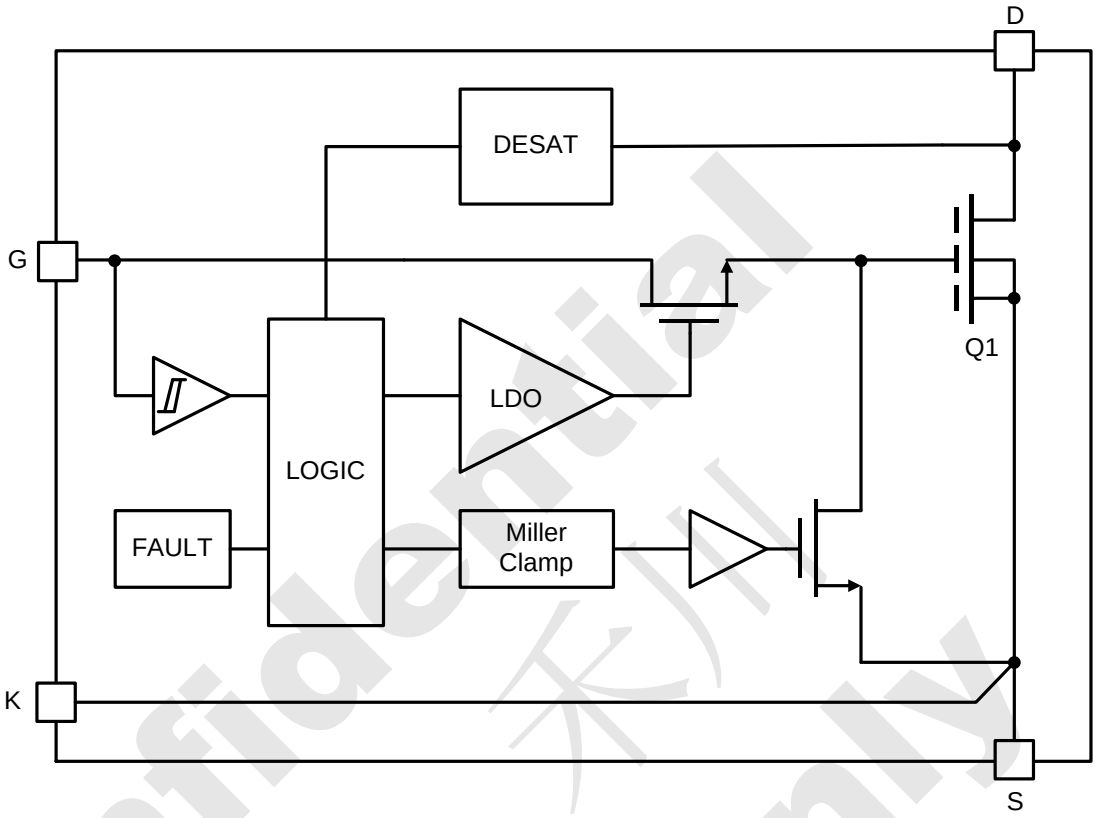

Confidential For Use Only

15. Function Description

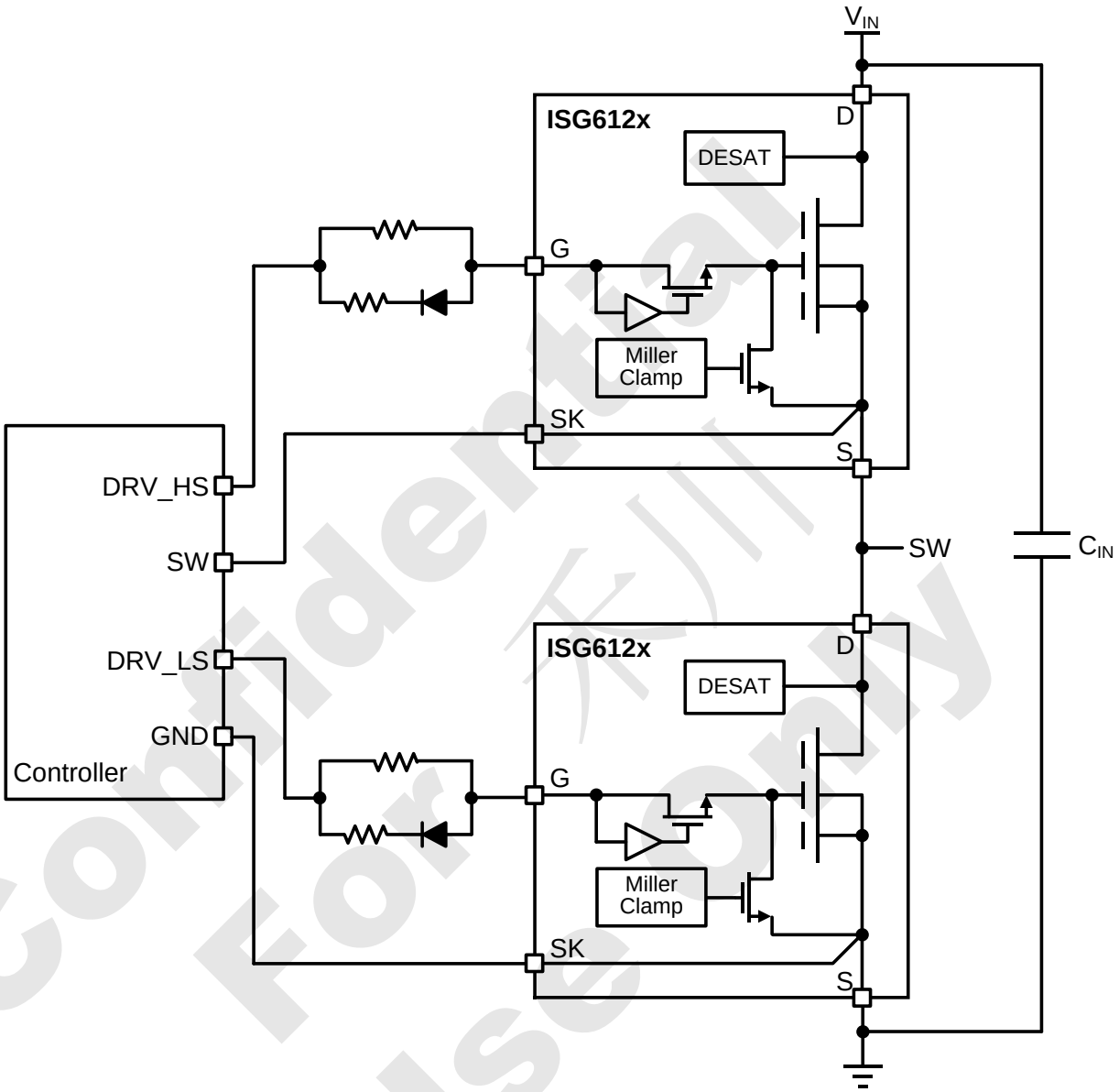

Confidential For Use Only

16. Package Information

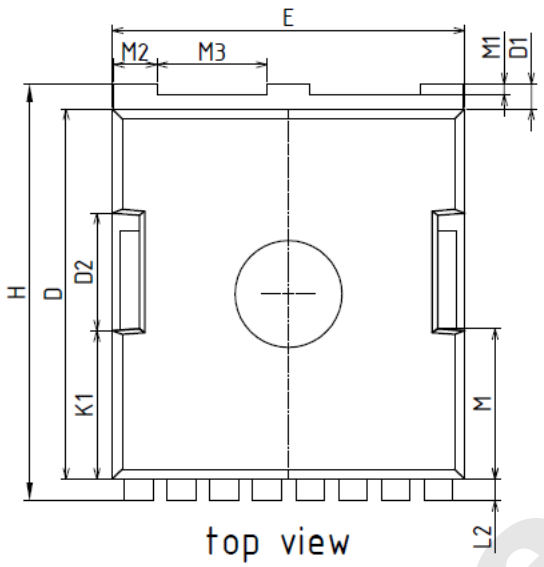

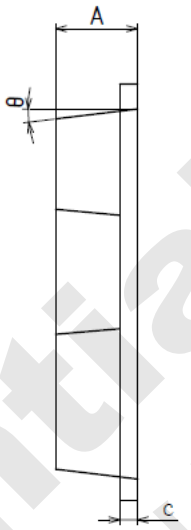

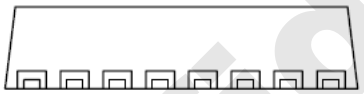

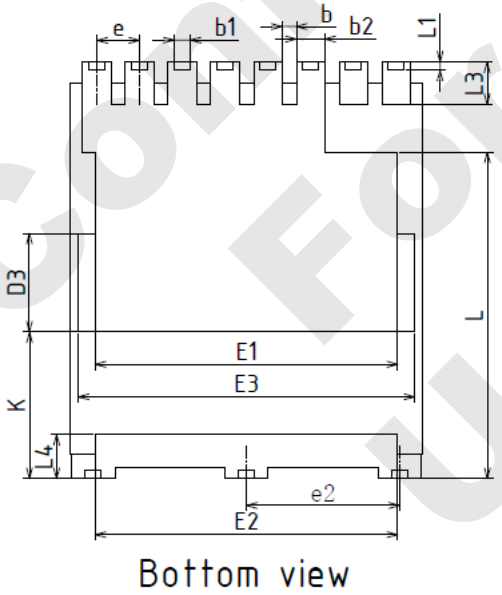

SYMBOL	MILLIMETER		
	MIN	NOM	MAX
A	2.15	2.30	2.45
b	0.30	0.40	0.50
b1	0.31	0.43	0.55
b2	0.65	0.80	0.90
c	0.40	0.50	0.60
D	10.18	10.38	10.58
D1	0.50	0.70	0.90
D2	3.30REF		
D3	2.77REF		
E	9.70	9.90	10.10
E1	8.50REF		
E2	8.50REF		
E3	9.46REF		
e	1.10	1.20	1.30
H	11.48	11.68	11.88
K	4.08REF		
K1	4.18REF		
L	9.13REF		
L1	0.23REF		
L2	0.50	0.60	0.70
L3	1.00	1.20	1.40
L4	1.00	1.20	1.40
M	4.18REF		
M1	0.26REF		
M2	1.10	1.20	1.30
M3	3.10REF		
Θ	10.00REF		
e2	4.20	4.30	4.40

Confidential For Use Only

17. Tape and Reel Information

TBA

18. Recommended Land Pattern

TBA

19. Order Information

Ordering Code	Package	Product Code	MSL	Packing (Tape & Reel)
ISG6124TA	TOLL-4L	6124TA	TBD	13” 2500PCS/reel

Confidential For 禾川 Use Only

Important Notice

The information provided in this document is intended as a guide only and shall not in any event be regarded as a guarantee of conditions, characteristics, or performance. Innoscience does not assume any liability arising out of the application or use of any product described herein, including but not limited to any personal injury, death, or property or environmental damage. No licenses, patent rights, or any other intellectual property rights is granted or conveyed. Innoscience reserves the right to modify without notice. All rights reserved.

Confidential For 禾川 Use Only