QUARTZ CRYSTAL MHZ

Part Number: 830108340909 | CFPX-180

AKA Number: LFXTAL083409

General Information

Standard 3.2 x 2.5mm SMD crystal in a ceramic package with a seam sealed metal lid, hermetically sealed.

Dimensions [mm]

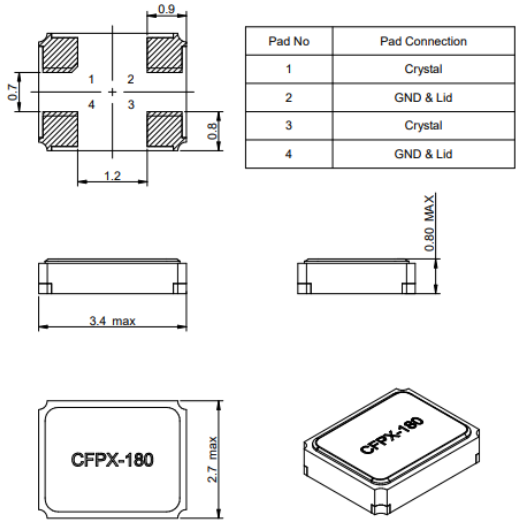

Pad No	Pad Connection
1	Crystal
2	GND & Lid
3	Crystal
4	GND & Lid



Recommended Land Pattern [mm]

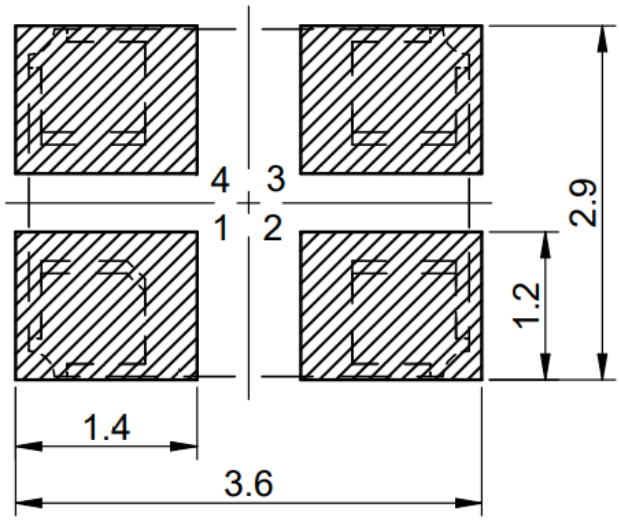

QUARTZ CRYSTAL MHZ

Part Number: 830108340909 | CFPX-180

AKA Number: LFXTAL083409

Frequency Parameters

Frequency	26.0 MHz
Frequency Tolerance	± 10 ppm @25°C
Frequency Stability	± 20 ppm
Operating Temperature	-40 °C to 105 °C
Overtone Order	Fundamental
Ageing	± 5 ppm max per year @ 25 °C

Material Parameters

Termination Finish	Ni Au
Moisture Sensitivity Level (MSL)	Not Applicable

Manufacturing Details

Reflow: 260 °C max over 10 seconds.

Electrical Parameters

Load Capacitance C_L	12 pF
Shunt Capacitance C_0	7 pF max.
Drive Level	100 µW max.
ESR	50 Ω max.

Environmental Parameters

Storage Temperature Range:	-55 °C to 125 °C

- Shock: 1500 g, 0.5 ms, 3 times in each of the 3 mutually perpendicular planes.
- Vibration: MIL-STD-883F, 20 g (20 Hz ~ 2000 Hz), 1.52 mm amplitude, 20 minutes in 3 mutually perpendicular planes, 4 cycles.

Technical Standards

RoHS Status	2015/863/EU - Compliant
REACH Status	(EC)1907/2006 - Compliant

Packaging Details

Packaging SPQ	Tape & Reel 3000 pcs

Tape & reel in accordance with EIA-481
Quantities below the standard reel size to be supplied on cut tape.

Company Address

Würth Elektronik eiSos GmbH & Co. KG
EMC & Inductive Solutions
Max-Eyth-Str. 1
74638 Waldenburg
Germany
Tel. +49 (0) 79 42 945 - 0
www.we-online.com
eiSos@we-online.com