1. Scope

This specification applied to the products of current sensing resistor of metal alloy for RLT series manufactured by TA-I TECHNOLOGY CO., LTD.

2. Type Designation

RLT10	F	T	S	R002
Series No.	**Tolerance**	**Packaging**	**Power**	**Resistance**
06：0603 10：0805 12：1206	F= ±1% G= ±2 % J= ±5%	T= Paper	S= 0.5W I= 0.75W C= 1.0W	e.g. R002= 2mΩ R0015=1.5mΩ

3. Construction and Dimension

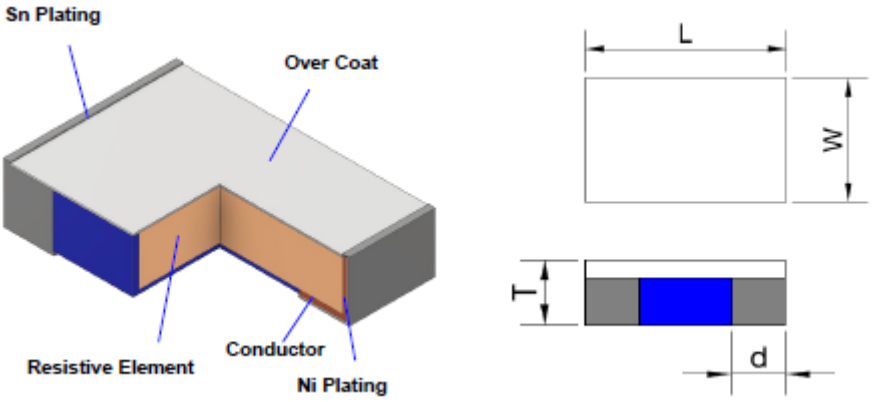

Type	L	W	d	T
RLT06	1.60±0.15	0.80±0.20	0.6 ± 0.20 (R = 1mΩ)	0.40±0.10
			0.35 ± 0.20 (R > 1mΩ)	
RLT10	2.05±0.15	1.30±0.20	0.35±0.20	0.40 ±0.10 (R≦2mΩ)
				0.25 ±0.10 (R>2mΩ)
RLT12	3.2±0.15	1.6±0.20	0.9±0.30	0.40±0.10

UNIT: mm

4. Features

Characteristics	Feature			Measurement Method
	RLT06	RLT10	RLT12	
Size	0603	0805	1206	
Power Ratings (W)	0.5W	0.75W	1W	JIS Code 3A / JIS Code 3D
Resistance Value (mΩ)	1~3mΩ	1~3mΩ	1~3mΩ	Refer to JIS C 5201-1 4.5
T.C.R (ppm/°C)	±50 ppm/°C			Refer to JIS C 5201-1 4.8
Operation Temperature Range	-55 ~ +155			
Resistance Tolerance (%)	±1%、±2%、±5%			JIS C 5201 4.2.5
Insulation Resistance (MΩ)	Over 100			Refer to JIS C 5201-1 4.6
Maximum Working Voltage (V)	$(P * R)^{1/2}$			

5. Reliability Tests

Test Items	Reference	Condition of Test	Test Limits
Temperature Coefficient of Resistance	IEC60115-1 4.8	+25 ~ 125°C	Refer 4.0
High Temperature Exposure (Storage)	AEC-Q200-REV D-Test 3 MIL-STD202 Method 108	T=125°C,1000hrs, Measurement at 24hrs after test conclusion.	< ±1%
Temperature Cycling	AEC-Q200-REV D-Test 4 JESD22 Method JA-104	1000Cycle (-55°C to 125°C) Measurement at 24hrs after test conclusion.	< ±1%
Short time overload	IEC60115-1 4.13	5 X rated power for 5s	< ±1%
Moisture Resistance	AEC-Q200-REV D-Test 6 MIL-STD-202 Method 106	T=24 hours / Cycle ,10 Cycles. Notes: Steps 7a& 7b not required. Unpowered	< ±1%
Biased Humidity	AEC-Q200-REV D-Test 7 MIL-STD-202 Method 103	10% Rated power at 85°C, RH:85%, 1000Hrs, Measurement at 24hrs after test conclusion.	< ±1%
Operation life	AEC-Q200-REV D-Test 8 MIL-STD-202 Method 108	1000 hours TA=125°C at 35% rated power. Measurement at 24±4 hours after test conclusion.	< ±1%
External Visual	AEC-Q200-REV D-Test 9 MIL-STD-883 Method 2009	Electrical test not required. Inspect device construction, marking and workmanship	
Physical Dimension	AEC-Q200-REV D-Test 10 JESD22 Method JB-100	Verify physical dimensions to the applicable device detail specification. Note: User(s) and Suppliers spec. Electrical test not required.	
Resistance to Solvents	AEC-Q200-REV D-Test 12 MIL-STD-202 Method 215	a: Isopropyl Alcohol：Mineral Spirits= 1：3 b: Terpene Defluxer (Bioact EC-7R) c: Deionized water：Propylene Glycol Monomethyl Ether：monoethanolamine =42：1：1	Marking and protective layer Cannot be detached

Resistance to Soldering Heat	AEC-Q200-REV D-Test 15 MIL-STD-202 Method 210	T=260+/-5°C solder,10+/-1 sec dwell	< ±0.5%
Mechanical Shock	AEC-Q200-REV D-Test 13 MIL-STD-202 Method 213	100g's, Normal duration is 6ms, half sine shock pulse	< ±1%
Resistance to vibration	AEC-Q200-REV D-Test 14 MIL-STD-202 Method 204	5g's for 20min.12cycles, 10-2000Hz	<±1%
Board Flex	AEC-Q200-REV D-Test 21 AEC-Q200-005	Min 2mm deflection ,60sec.	< ±0.5%
Flammability	AEC-Q200-REV D-Test 20 UL-94	V-0 or V-1are acceptable, Electrical test not required	V-0
Thermal Shock	AEC-Q200-REV D-Test 16 MIL-STD-202 Method 107	-55°C/+155°C. Note: Number of cycles required-300, Maximum transfer time-20 seconds, Dwell time-15 minutes. Air-Air.	< ±1.0%
ESD	AEC-Q200-REV D-Test 17 AEC-Q200-002 or ISO/DIS 10605	verify the voltage setting at 500V	< ±1.0%
Solderability	AEC-Q200-REV D-Test 18 J-STD-002	Method B, aging 4 hours at 155 °C dry heat Lead-free solder bath at 235±3 °C Dipping time: 3±0.5 seconds	> 95% area covered with tin
Terminal Strength (SMD)	AEC-Q200-REV D-Test 22 AEC-Q200-006	Force of 1.8kg for 60 seconds Remarks: 0201-NA	< ±1.0%

5.1 Derating Curve

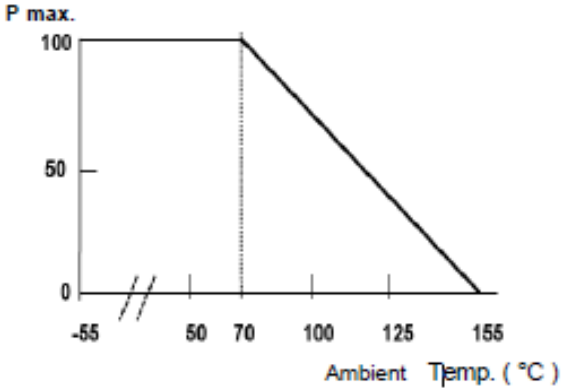

Figure 1

5.2 Rated Current

The rated current is calculated by the following formula:

$$I = \sqrt{P \div R}$$

I: Rated Current (A)

P: Rated Power (W)

R: Resistance Value (Ω)

6. Recommended Solder Pad Dimension

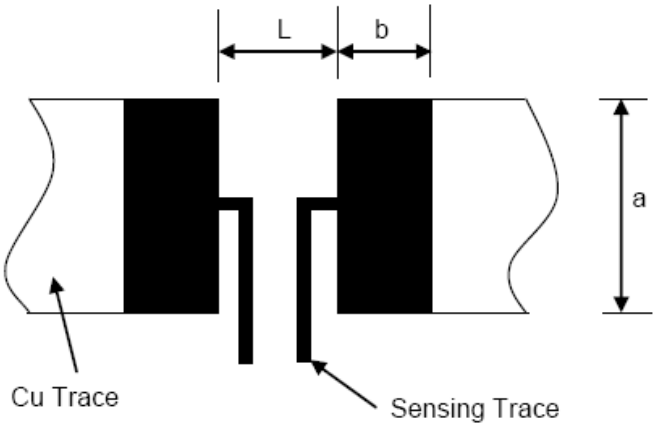

Type \ Land pattern Size		Dimension (mm)		
		A	B	L
RLT	06 (0603)	1.0	0.75	0.45 (R = 1mΩ)
		1.0	0.75	0.80 (R > 1mΩ)
RLT	10 (0805)	1.4	1.20	0.80
RLT	12 (1206)	1.8	1.70	1.60

UNIT: mm

7. Number of Package

Type	Paper Tape
	4 mm pitch
	178mm/R
RLT	5000

8. Label

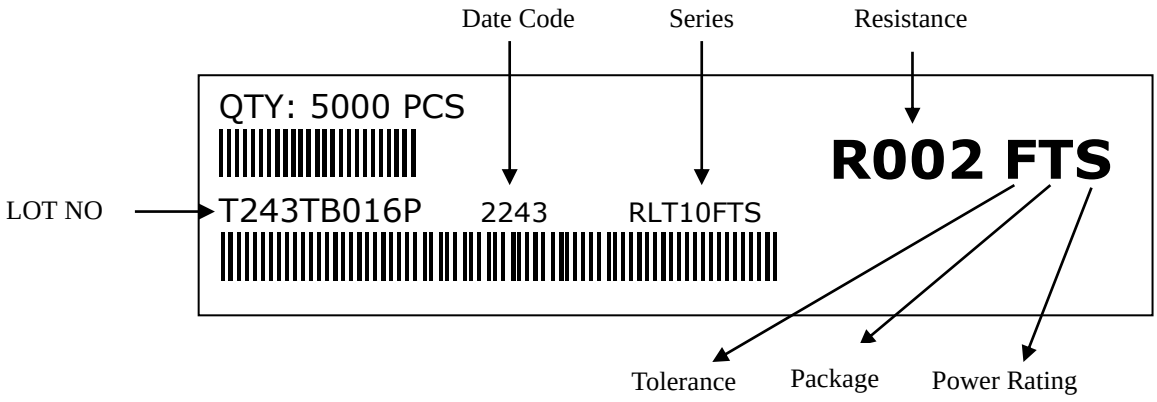

9. Packaging

4mm pitch paper

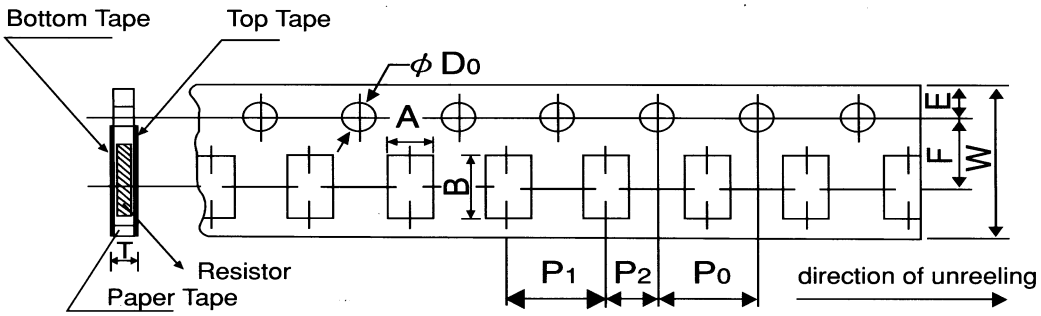

Packing	Type	A	B	W	F	E	P_1	P_2	P_0	ψ D_0	T
Paper Tape	RLT06	1.1 ±0.1	1.9 ±0.1	8.0±0.2	3.5±0.05	1.75±0.1	4.0±0.1	2.0±0.05	4.0±0.1	φ1.5 +0.1 -0	0.64 ±0.1
	RLT10	1.6 ±0.15	2.4 ±0.2								
	RLT12	2.0 ±0.15	3.6 ±0.2								

Unit: mm

10. Reel Specification

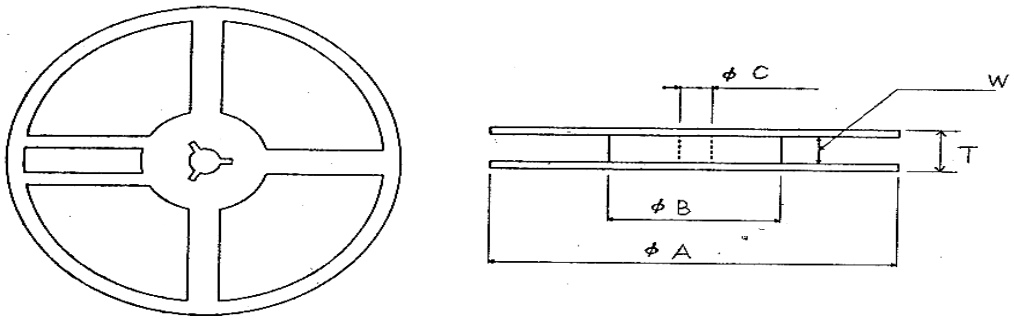

Series	ψA	ψB	ψC	W	T
RLT	178.0 ±2.0	60.0 ±1.0	13.0 ±1.0	9.0 ±1.0	11.5 ±1.0

Unit: mm

11. Peeling Strength of Top Cover Tape

Peel – off force of paper and blister tape is in accordance with "JIS"
that is, 0.1 to 0.7 N at a peel-off speed of 300 mm / minute.

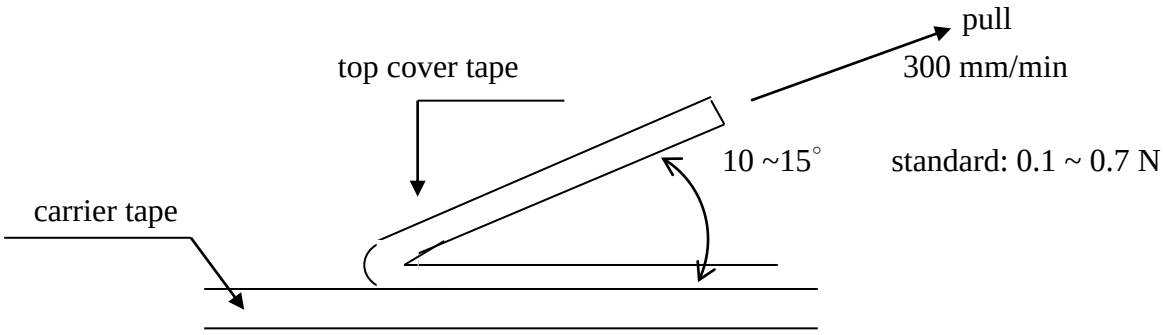

12. Storage Conditions:

Temperature: 5℃~35℃, Humidity:40%~75%

13. Shelf Life:

2 years from manufacturing date.

14. Recommend IR – Reflow profile (solder: Sn96.5 / Ag3 / Cu0.5)

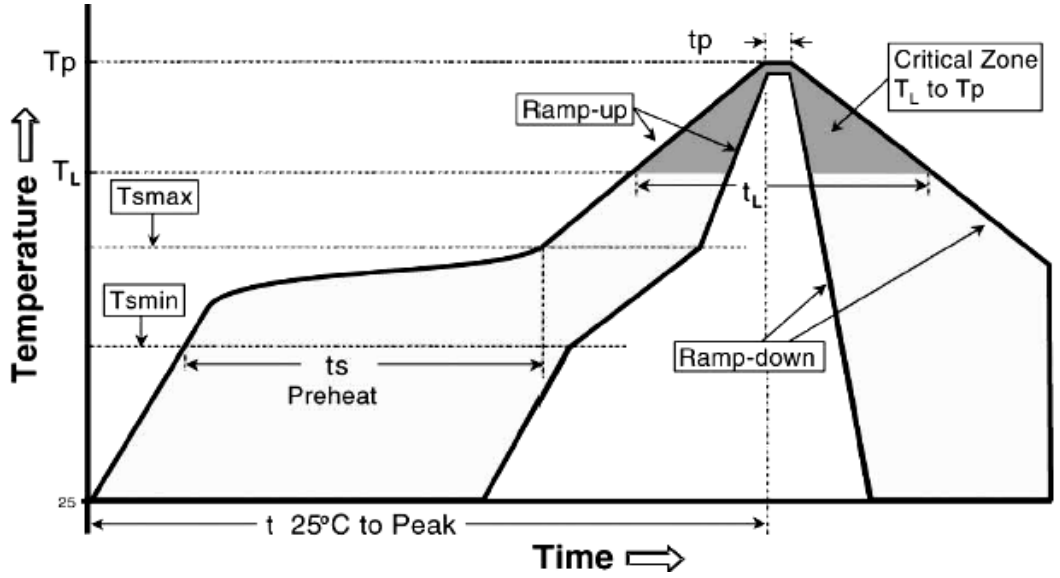

Profile Feature	Lead (Pb)-Free Assembly
Average ramp-up rate (Tsmax to Tp)	3°C / second max.
Preheat - Temperature Min (Ts_{min}) - Temperature Max (Ts_{max}) - Time (Ts_{min} to Ts_{max}) (ts)	 150°C 200°C 60 -120 seconds
Time maintained above: - Temperature (T_L) - Time (T_L)	 217°C 60-150 seconds
Peak Temperature (Tp)	260°C
Time within $^{+0}_{-5}$ °C of actual Peak Temperature (tp)[2]	10 seconds
Ramp-down Rate	6°C/second max.
Time 25°C to Peak Temperature	8mimutes max.

Allowed Re-flow times: 3 times

Remark: To avoid discoloration phenomena of chip on terminal electrodes, please use N2 Re-flow furnace.

15. ECN

Engineering Change Notice: The customer will be informed with ECN if there is significant modification on the characteristics and materials described in Approval Sheet.

16. Manufacturing Country & City:

TA-I TECHNOLOGY CO., LTD. (Taiwan– Tao Yuan)

Tel: (+886) 3-3246169 Fax: (+886) 3-3246167

Associated companies:

(1) TA-I TECHNOLOGY (SU ZHOU) CO., LTD. (China – Su Zhou)

Tel :(+86) 512-63457879 Fax: (+86) 512-63457869

(2) TA-I TECHNOLOGY ELECTRONIC (DONGGUAN) CO., LTD. (China –Dongguan)

Tel : (+86) 769-8339-4790～3 Fax: (+86) 769-8339-4794

(3) FORTUNE TASK RESISTOR FACTORY (China – Dongguan)

Tel : (+86) 769-8339-4790～3 Fax: (+86) 769-8339-4794

(4) TAI OHM ELECTRONICS (M) SDN. BHD. (Malaysia – Penang)

Tel :(+60) 4- 3900480 Fax: (+60) 4-3901481

(5) P.T.TAI ELECTRONIC Indonesia (Indonesia – Jakarta)

Tel: 62-21-89830123 Fax: 62-21-89830703