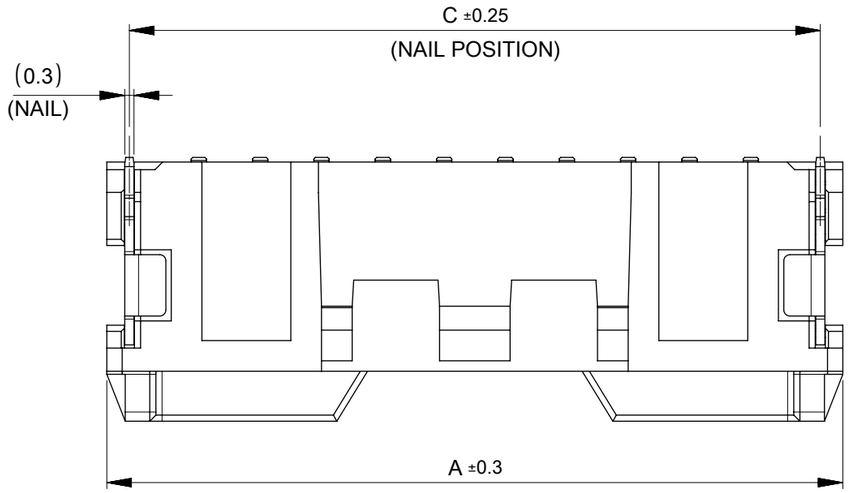

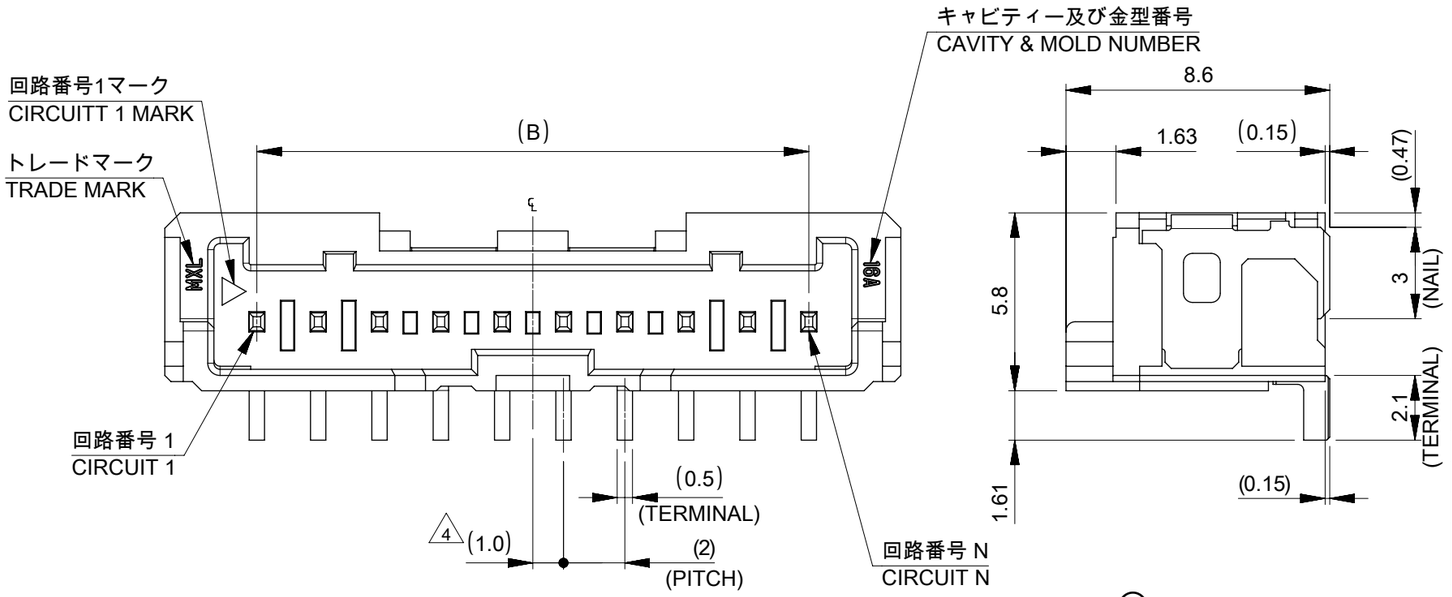

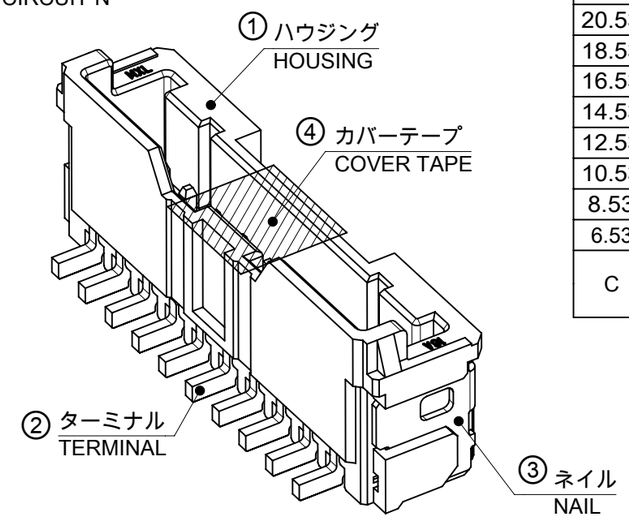

NOTES

1. 材質及び仕上げ(めっき仕様) : TABLE 1, TABLE 2 参照
   MATERIAL AND FINISHES (PLATING SPECIFICATION) : SEE TABLE 1 AND TABLE 2
2. 適合嵌合相手 : 505570シリーズ
   MATE WITH : 505570 SERIES
3. 端子テール部及びネイルの平坦度 : 0.1mm以下
   TAIL AND NAIL COPLANARITY TO BE 0.1mm MAXIMUM.
4. 偶数極に適用
   APPLY TO EVEN CIRCUIT
5. 製品仕様書 : 5055700001-PS PS 000
   PRODUCT SPECIFICATION : 5055700001-PS PS 000
6. コネクタ取扱説明書 : 5055700001 PS A03
   APPLICATION SPECIFICATION : 5055700001 PS A03
7. 本製品は錫めっき品である。
   金めっき品は5055750002-SD PSD 000をご参照下さい。
   THIS IS TIN PLATING PRODUCT.
   PLEASE REFER TO 5055750002-SD PSD 000 FOR GOLD PLATING PRODUCT.
8. 発注番号
   ORDER NUMBER

505575****

極数 CIRCUIT SIZE

番号 NO.	ハウジングカラー HOUSING COLOR
0	ナチュラル(白) NATURAL(WHITE)
1	黒 BLACK

番号 NO.	カバーテープ COVER TAPE
7	無 WITHOUT
8	有 WITH

1 TABLE 1

番号 NO.	部品 PART	材質 MATERIAL
①	ハウジング HOUSING	ポリアミド(PA), UL94 V-0, 色 : 注記8参照 POLYAMIDE(PA), UL94 V-0, COLOR: SEE NOTE 8
②	ターミナル TERMINAL	黄銅 BRASS
		錫めっき : 1.0 MICROMETER MINIMUM MATTE TIN PLATING
		ニッケルめっき (下地めっき) : 1.0 MICROMETER MINIMUM NICKEL PLATING (UNDER PLATING)
③	ネイル NAIL	リン青銅 PHOSPHOR BRONZE
		錫めっき : 1.0 MICROMETER MINIMUM MATTE TIN PLATING
		ニッケルめっき (下地めっき) : 1.0 MICROMETER MINIMUM NICKEL PLATING (UNDER PLATING)
④	カバーテープ COVER TAPE	ポリイミド POLYIMIDE

			WITHOUT		WITH		COVER TAPE
			BLACK	NATURAL(WHITE)	BLACK	NATURAL(WHITE)	HOUSING COLOR
34.53	30	36	5055751671	5055751670	5055751681	5055751680	16
32.53	28	34	5055751571	5055751570	5055751581	5055751580	15
30.53	26	32	5055751471	5055751470	5055751481	5055751480	14
28.53	24	30	5055751371	5055751370	5055751381	5055751380	13
26.53	22	28	5055751271	5055751270	5055751281	5055751280	12
24.53	20	26	5055751171	5055751170	5055751181	5055751180	11
22.53	18	24	5055751071	5055751070	5055751081	5055751080	10
20.53	16	22	5055750971	5055750970	5055750981	5055750980	9
18.53	14	20	5055750871	5055750870	5055750881	5055750880	8
16.53	12	18	5055750771	5055750770	5055750781	5055750780	7
14.53	10	16	5055750671	5055750670	5055750681	5055750680	6
12.53	8	14	5055750571	5055750570	5055750581	5055750580	5
10.53	6	12	5055750471	5055750470	5055750481	5055750480	4
8.53	4	10	5055750371	5055750370	5055750381	5055750380	3
6.53	2	8	5055750271	5055750270	5055750281	5055750280	2
C	B	A	8 発注番号 ORDER NUMBER				極数 CIRCUIT SIZE
			エンボステープ梱包 PACKAGING STYLE : EMBOSSED TAPE AND REEL				

THIS DRAWING CONTAINS INFORMATION THAT IS PROPRIETARY TO MOLEX ELECTRONIC TECHNOLOGIES, LLC AND SHOULD NOT BE USED WITHOUT WRITTEN PERMISSION

DIMENSION UNITS	SCALE
mm	NTS

GENERAL TOLERANCES (UNLESS SPECIFIED)

ANGULAR TOL	±	3.0 °
4 PLACES	±	0.2
3 PLACES	±	0.2
2 PLACES	±	0.2
1 PLACE	±	0.2
0 PLACES	±	0.2

DRAFT WHERE APPLICABLE MUST REMAIN WITHIN DIMENSIONS

CURRENT REV DESC:

EC NO: 718854
DRWN: SOKUMURA01 2023/02/28
CHK'D: SAKIYAMA 2023/08/04
APPR: MARAI 2023/08/04

INITIAL REVISION:
DRWN: TENAGASE 2016/06/07
APPR: TKANEKO 2016/06/23

THIRD ANGLE PROJECTION | DRAWING: A3-SIZE | SERIES: 505575

molex

MICRO-LOCK PLUS 2.0 W/B
SINGLE ROW VERTICAL SMT PLUG ASSEMBLY
TIN PLATING

PRODUCT CUSTOMER DRAWING

DOCUMENT NUMBER	DOC TYPE	DOC PART	REVISION
5055750001	PSD	000	D

MATERIAL NUMBER	CUSTOMER	SHEET NUMBER
SEE CHART	GENERAL	1 OF 4

DOCUMENT STATUS	P1	RELEASE DATE	2023/08/04 04:03:59

FORMAT: molex_mmd-A3
REVISION: J1
DATE: 2021/05/07

製品形状
PRODUCT SHAPE

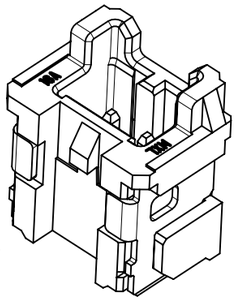

2極
2 CIRCUIT

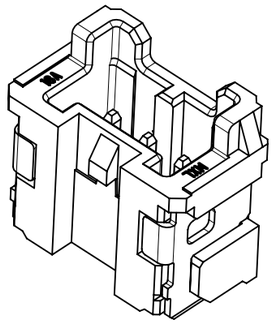

3極
3 CIRCUIT

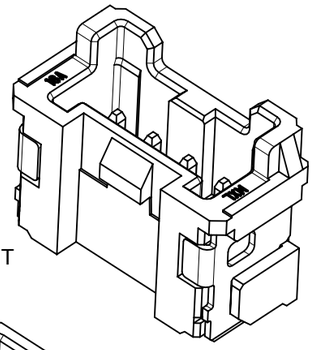

4-5極
4-5 CIRCUIT

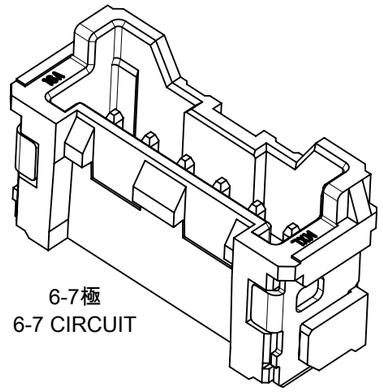

6-7極
6-7 CIRCUIT

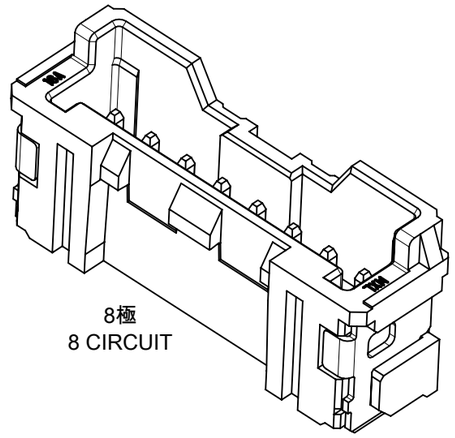

8極
8 CIRCUIT

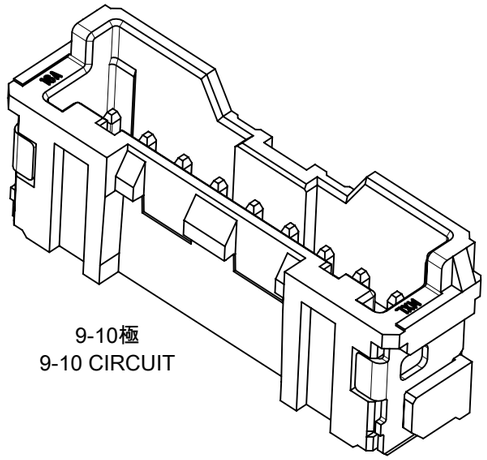

9-10極
9-10 CIRCUIT

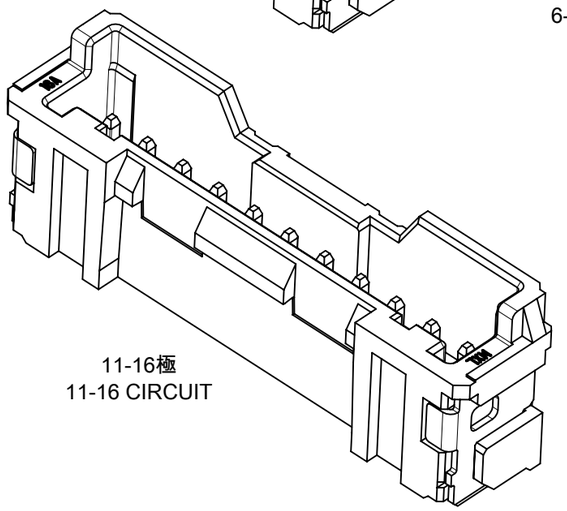

11-16極
11-16 CIRCUIT

基板パターンレイアウト
PCB PATTERN LAYOUT

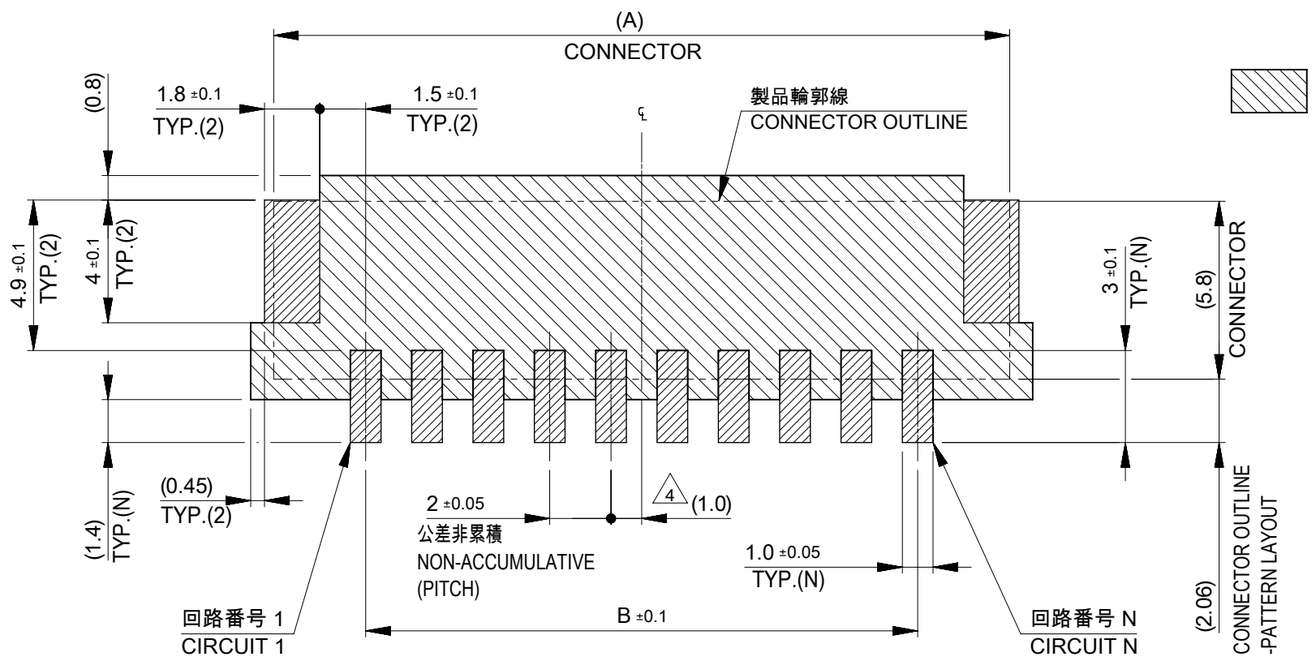

基板パターンレイアウト(参考)
(参考：基板厚1.6mm, メタルマスク厚み0.15mm, マスク開口率100%)
PCB PATTERN LAYOUT (REFERENCE)
(REFERENCE: PCB THICKNESS 1.6mm, STENCIL THICKNESS 0.15mm, APERTURE RATIO 100%)

パターン非推奨エリア
パターンを引き回す際には製品機能に影響がないことを御確認ください。
PATTERN IS NOT RECOMMENDED ON THE HATCHING AREA.
PLEASE CHECK NOT TO HAVE PROBLEM FOR PRODUCT FUNCTION
WHEN SETTING PATTERN ON THE HATCHING AREA.

THIS DRAWING CONTAINS INFORMATION THAT IS PROPRIETARY TO MOLEX ELECTRONIC TECHNOLOGIES, LLC AND SHOULD NOT BE USED WITHOUT WRITTEN PERMISSION

DIMENSION UNITS	SCALE
mm	NTS

GENERAL TOLERANCES (UNLESS SPECIFIED)

ANGULAR TOL	±	3.0 °
4 PLACES	±	0.2
3 PLACES	±	0.2
2 PLACES	±	0.2
1 PLACE	±	0.2
0 PLACES	±	0.2

DRAFT WHERE APPLICABLE MUST REMAIN WITHIN DIMENSIONS

CURRENT REV DESC:

EC NO: 718854
DRWN: SOKUMURA01 2023/02/28
CHK'D: SAKIYAMA 2023/08/04
APPR: MARAI 2023/08/04

INITIAL REVISION:
DRWN: TENAGASE 2016/06/07
APPR: TKANEKO 2016/06/23

THIRD ANGLE PROJECTION | DRAWING: A3-SIZE | SERIES: 505575

molex

MICRO-LOCK PLUS 2.0 W/B
SINGLE ROW VERTICAL SMT PLUG ASSEMBLY
TIN PLATING

PRODUCT CUSTOMER DRAWING

DOCUMENT NUMBER	DOC TYPE	DOC PART	REVISION
5055750001	PSD	000	D

MATERIAL NUMBER	CUSTOMER	SHEET NUMBER
SEE SHEET 1	GENERAL	2 OF 4

DOCUMENT STATUS	P1	RELEASE DATE	2023/08/04 04:03:59

FORMAT: master-B-size-A3
REVISION: J1
DATE: 2021/05/07

吸着エリア
SUCTION AREA

カバーテープ無
WITHOUT COVER TAPE
505575**7*

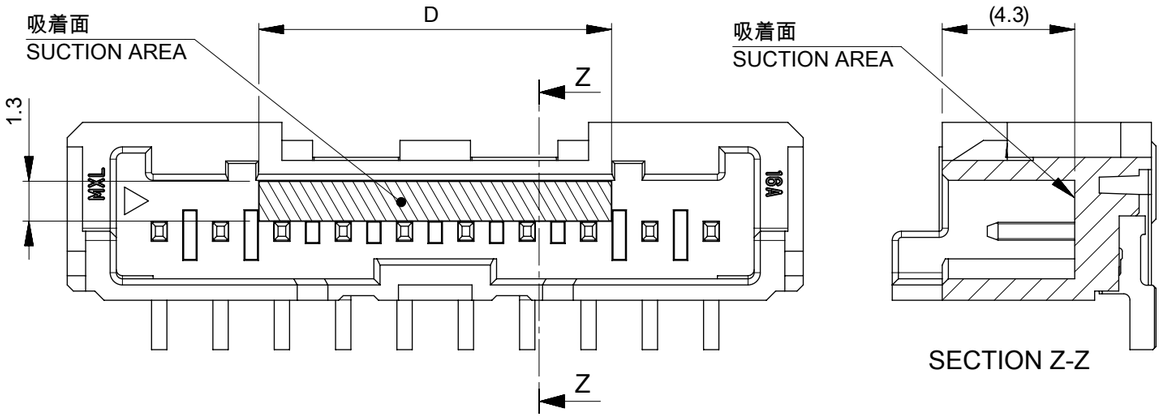

カバーテープ有
WITH COVER TAPE
505575**8*

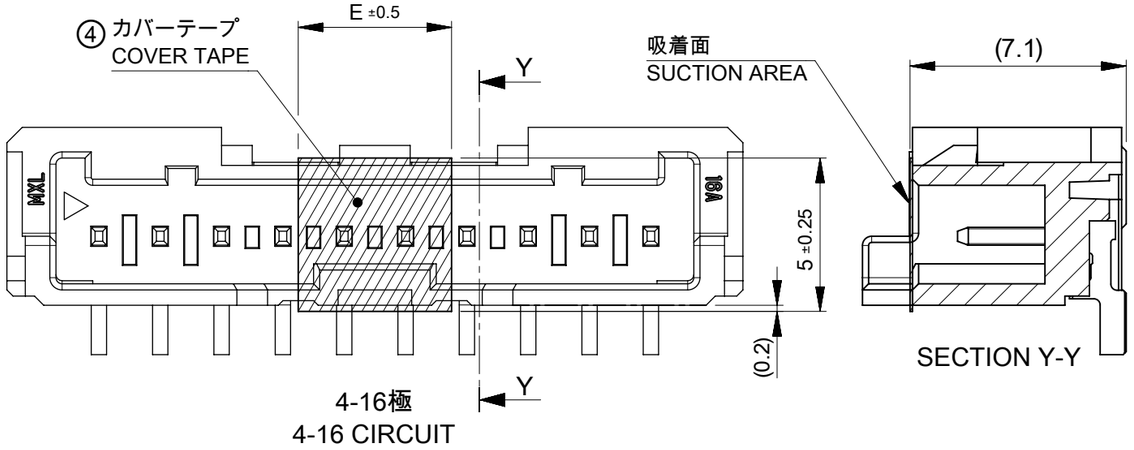

4-16極
4-16 CIRCUIT

嵌合状態図
MATED CONNECTORS

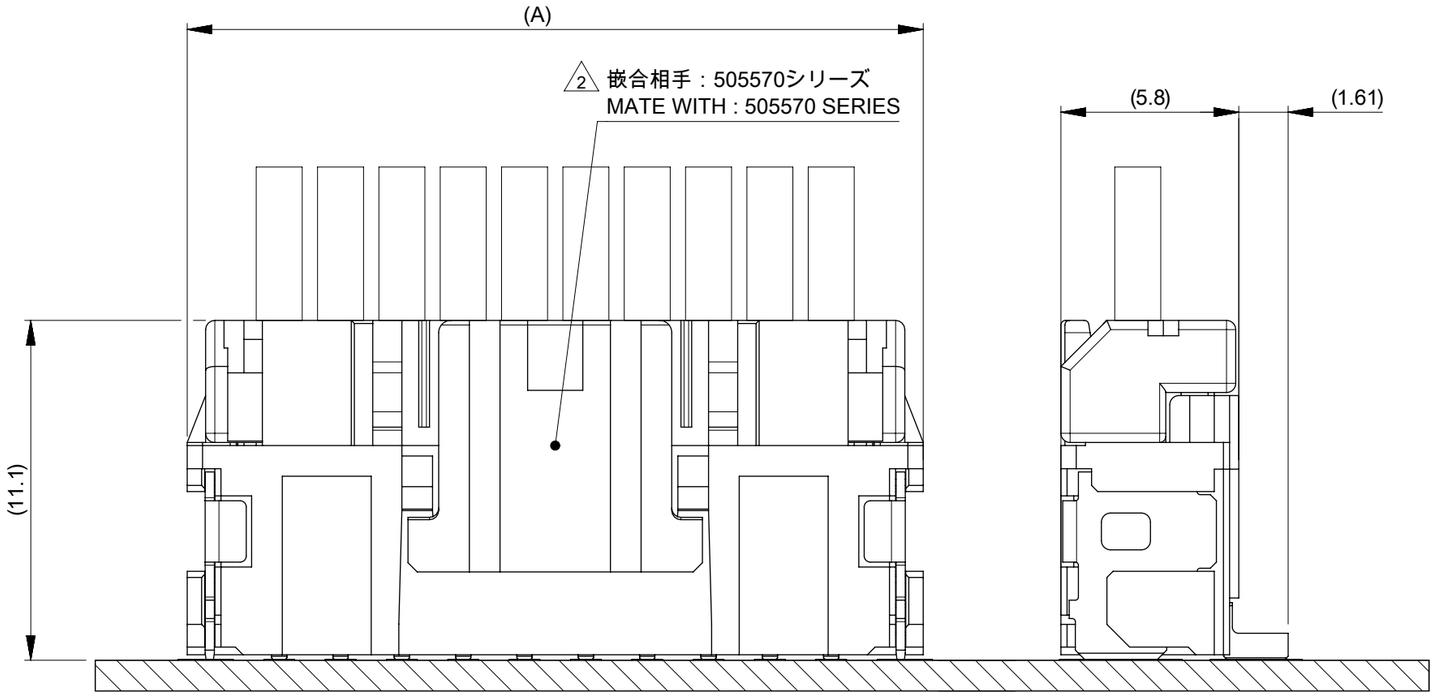

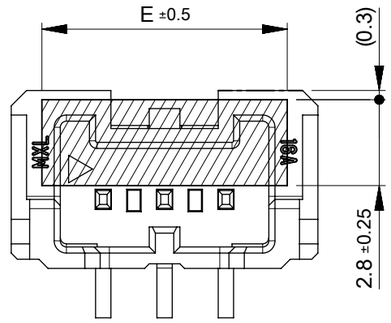

2-3極
2-3 CIRCUIT

5	11.5	16
		15
		14
		13
		12
		11
		10
4	9.5	9
		8
		7
		6
	8.5	5
	6.5	4
8	4.5	3
6	2.5	2
E	D	極数 CIRCUIT SIZE

THIS DRAWING CONTAINS INFORMATION THAT IS PROPRIETARY TO MOLEX ELECTRONIC TECHNOLOGIES, LLC AND SHOULD NOT BE USED WITHOUT WRITTEN PERMISSION

DIMENSION UNITS	SCALE
mm	NTS

GENERAL TOLERANCES (UNLESS SPECIFIED)

ANGULAR TOL	±	3.0 °
4 PLACES	±	0.2
3 PLACES	±	0.2
2 PLACES	±	0.2
1 PLACE	±	0.2
0 PLACES	±	0.2

DRAFT WHERE APPLICABLE MUST REMAIN WITHIN DIMENSIONS

CURRENT REV DESC:

EC NO: 718854
DRWN: SOKUMURA01 2023/02/28
CHK'D: SAKIYAMA 2023/08/04
APPR: MARAI 2023/08/04

INITIAL REVISION:
DRWN: TENAGASE 2016/06/07
APPR: TKANEKO 2016/06/23

THIRD ANGLE PROJECTION | DRAWING: A3-SIZE | SERIES: 505575

molex

MICRO-LOCK PLUS 2.0 W/B
SINGLE ROW VERTICAL SMT PLUG ASSEMBLY
TIN PLATING

PRODUCT CUSTOMER DRAWING

DOCUMENT NUMBER	DOC TYPE	DOC PART	REVISION
5055750001	PSD	000	D

MATERIAL NUMBER	CUSTOMER	SHEET NUMBER
SEE SHEET 1	GENERAL	3 OF 4

DOCUMENT STATUS	P1	RELEASE DATE	2023/08/04 04:03:59

FORMAT: master_format-A3
REVISION: J1
DATE: 2021/05/07

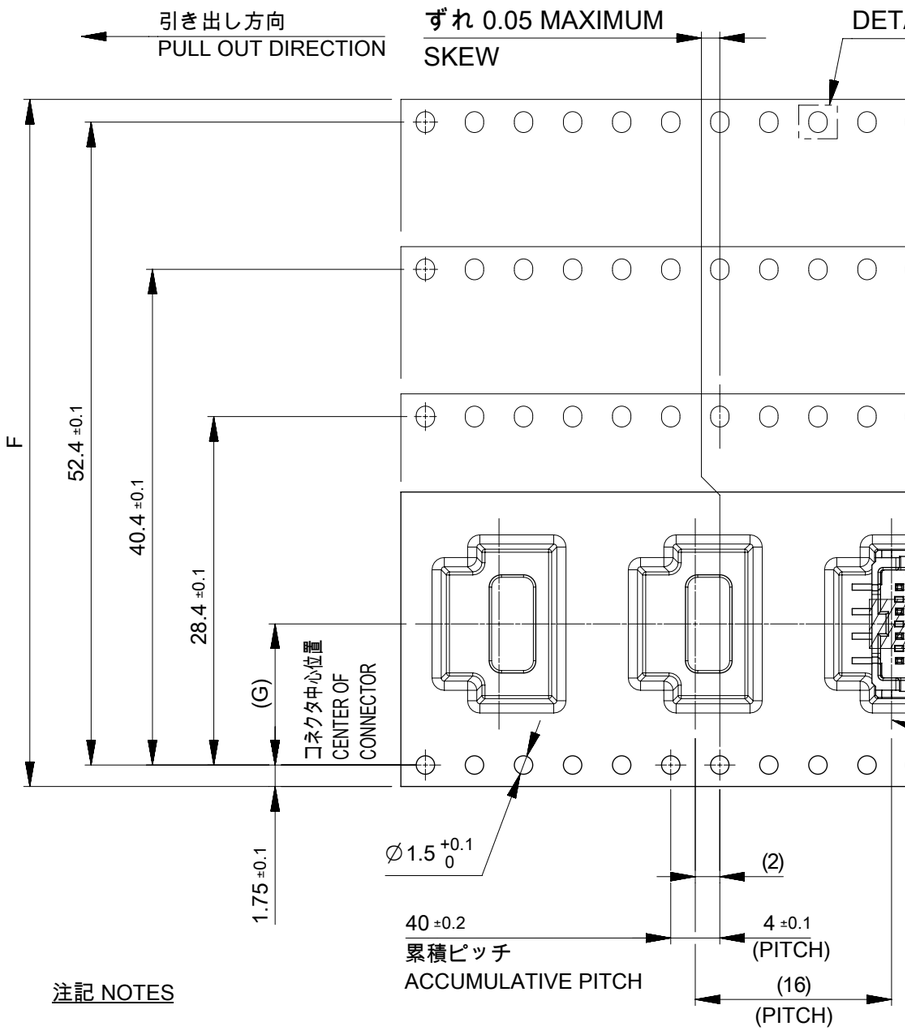

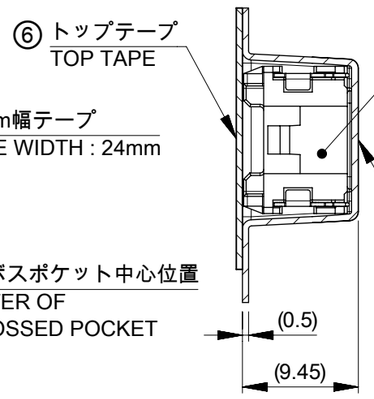

SECTION X-X

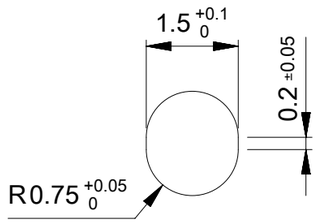

DETAIL V

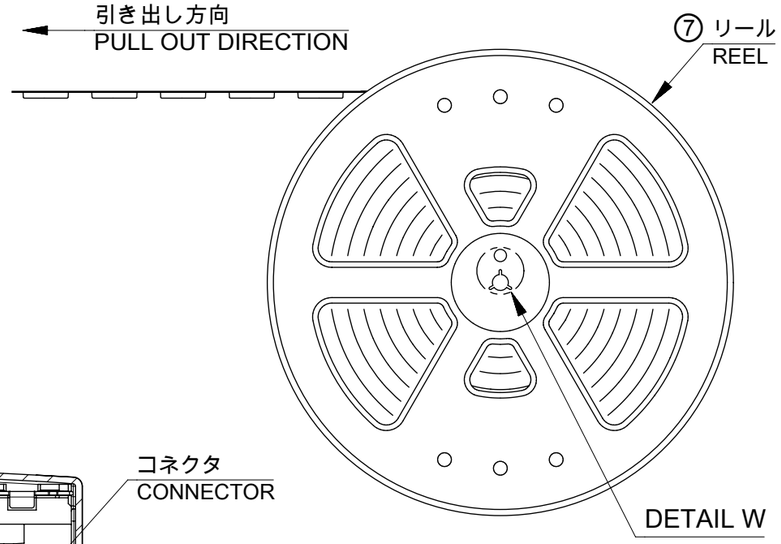

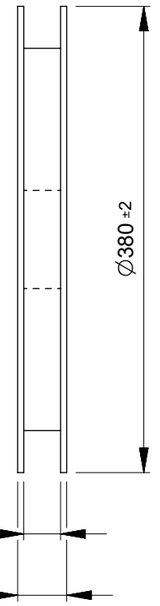

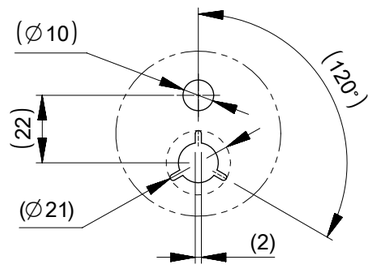

DETAIL W

61.4	57.4	26.2	56±0.3	16
				15
				14
49.4	45.4	20.2	44±0.3	13
				12
				11
				10
				9
				8
37.4	33.4	14.2	32±0.3	7
				6
29.4	25.4	11.5	24 +0.3 -0.1	5
				4
				3
				2
J	H	G	F	極数 CIRCUIT SIZE

注記 NOTES

9. 梱包数量：600個
   NUMBER OF CONNECTORS : 600 PIECES/REEL
10. 梱包仕様書：5055759200 PS 200
    PACKING SPECIFICATION : 5055759200 PS 200
11. リードテープ長さ
    LEAD TAPE LENGTH

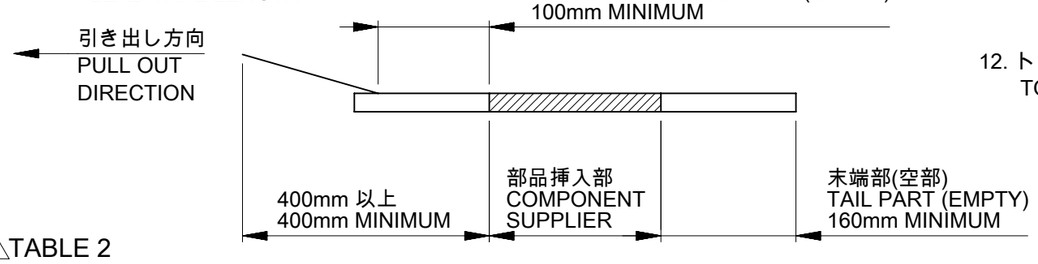

12. トップテープの剥離強度については、IEC 60286-3に準拠
    TOP TAPE PEEL FORCE IS DEFINED BY IEC 60286-3.

△1 TABLE 2

番号 NO.	部品 PART	材質 MATERIAL
⑤	エンボステープ EMBOSSED TAPE	ポリスチレン(PS) POLYSTYRENE(PS)
⑥	トップテープ TOP TAPE	ポリエチレン(PE), その他 POLYETHYLENE(PE), OTHER
⑦	リール REEL	ポリスチレン(PS), [リサイクル材を含む] POLYSTYRENE(PS) [RECYCLE MATERIAL CONTAINED]

DOCUMENT STATUS	P1	RELEASE DATE	2023/08/04 04:03:59

THIS DRAWING CONTAINS INFORMATION THAT IS PROPRIETARY TO MOLEX ELECTRONIC TECHNOLOGIES, LLC AND SHOULD NOT BE USED WITHOUT WRITTEN PERMISSION

DIMENSION UNITS	mm
SCALE	NTS
GENERAL TOLERANCES (UNLESS SPECIFIED)	
ANGULAR TOL ±	3.0 °
4 PLACES ±	0.2
3 PLACES ±	0.2
2 PLACES ±	0.2
1 PLACE ±	0.2
0 PLACES ±	0.2
DRAFT WHERE APPLICABLE MUST REMAIN WITHIN DIMENSIONS	

CURRENT REV DESC:

EC NO: 718854
DRWN: SOKUMURA01 2023/02/28
CHK'D: SAKIYAMA 2023/08/04
APPR: MARAI 2023/08/04

INITIAL REVISION:
DRWN: TENAGASE 2016/06/07
APPR: TKANEKO 2016/06/23

THIRD ANGLE PROJECTION | DRAWING: A3-SIZE | SERIES: 505575

molex

MICRO-LOCK PLUS 2.0 W/B
SINGLE ROW VERTICAL SMT PLUG ASSEMBLY
TIN PLATING

PRODUCT CUSTOMER DRAWING

DOCUMENT NUMBER	DOC TYPE	DOC PART	REVISION
5055750001	PSD	000	D

MATERIAL NUMBER	CUSTOMER	SHEET NUMBER
SEE SHEET 1	GENERAL	4 OF 4

FORMAT: molex_drw-A3
REVISION: J1
DATE: 2021/05/07