MMIC REFLECTIONLESS

Low Pass Filter

XLF-123+

50Ω DC to 12200 MHz

THE BIG DEAL

- Match to 50Ω in the stop band, eliminates undesired reflections
- Cascadable
- Excellent Power handling
- Temperature stable, up to +105°C
- Small size, 3 x 3 mm
- Protected by US Patent No. 8,392,495

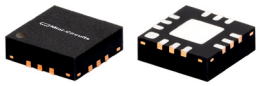

Generic photo used for illustration purposes only

CASE STYLE: DQ1225

+RoHS Compliant
The +Suffix identifies RoHS Compliance.
See our website for methodologies and qualifications

APPLICATIONS

- Harmonics Rejection
- Satellite
- Radar
- Military & Space

PRODUCT OVERVIEW

Mini-Circuits' XLF-123+ reflectionless filter employs a novel filter topology which absorbs and terminates stop band signals internally rather than reflecting them back to the source. This new capability enables unique applications for filter circuits beyond those suited to traditional approaches. Traditional filters are reflective in the stop band, sending signals back to the source at 100% of the power level. These reflections interact with neighboring components and often result in inter-modulation and other interferences. Reflectionless filters eliminate stop band reflections, allowing them to be paired with sensitive devices and used in applications that otherwise require circuits such as isolation amplifiers or attenuators.

KEY FEATURES

Features	Advantages
Reflectionless Technology	Reflectionless filters absorb unwanted signals, preventing reflections back to the source. This reduces generation of additional unwanted signals without the need for extra components like attenuators, improving system dynamic range and saving board space.
50Ω Match in Stopband	Reflectionless filters maintain good impedance matching in the stopband, allowing for integration with high gain, wideband amplifiers without the risk of creating out-of-band instabilities.
Excellent RF Performance Repeatability	Fabricated on a GaAs process, X-series filters are inherently repeatable for large-volume production.
Excellent Stability over temperature	With ±0.3 dB variation over temperature, is ideal for use in wide temperature range applications without the need for additional temperature compensation.
Excellent Power Handling in a Compact Package	High power handling extends the usability of these filters to the transmit path for inter-stage filtering.

REV. B
ECO-020691
XLF-123+
MCL NY
240117

Low Pass Filter

XLF-123+

50Ω DC to 12200 MHz

ELECTRICAL SPECIFICATIONS[1] AT 25°C

Parameter		F#	Frequency (MHz)	Min.	Typ.	Max.	Unit
Passband	Insertion Loss	DC - F1	DC-12200	—	1.8	2.4	dB
	Frequency Cut-off	F2	15000	—	3.0	—	dB
	VSWR	DC - F1	DC-12200	—	1.3	—	:1
Stopband	Rejection	F3 - F4	18100 - 19000	14	16	—	dB
		F4 - F5	19000 - 29000	18	20	—	dB
	VSWR	F3 - F4	18100 - 19000	—	1.3	—	:1
		F4 - F5	19000 - 29000	—	2.5	—	:1

1. Measured on Mini-Circuits Characterization Test Board TB-844-123+

ABSOLUTE MAXIMUM RATINGS[2]

Parameter	Ratings
Operating Temperature	-55°C to +105°C
Storage Temperature	-65°C to +150°C
RF Power Input, Passband (DC-F1)[3]	2 W at 25°C
RF Power Input, Stopband (F2-F5)[4]	50 mW at 25°C

2. Permanent damage may occur if any of these limits are exceeded.
3. Passband rating derates linearly to 1 W at 105°C ambient
4. Stopband rating derates linearly to 25 mW at 105°C ambient

SPECIFICATION DEFINITION

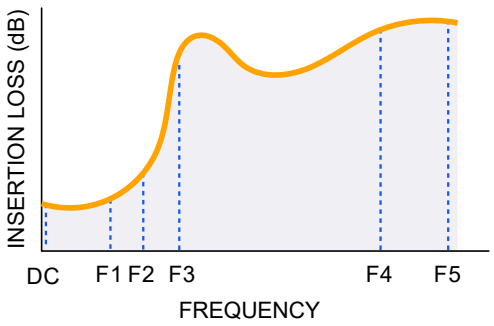

Low Pass Filter

XLF-123+

50Ω DC to 12200 MHz

SIMPLIFIED SCHEMATIC AND PAD DESCRIPTION

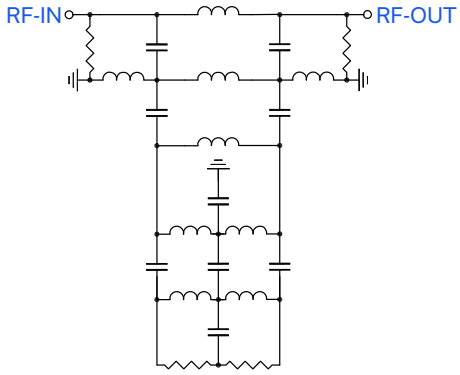

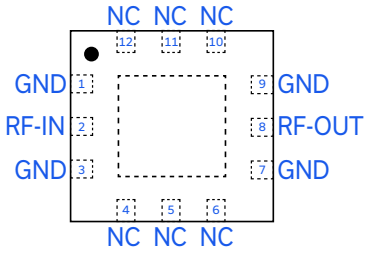

Function	Pad Number	Description
RF-IN	2	RF Input Pad
RF-OUT	8	RF Output Pad
GND	1,3,7,9, Paddle	Connected to ground
NC (GND Externally)	4,5,6,10,11,12	No internal connection

PRODUCT MARKING

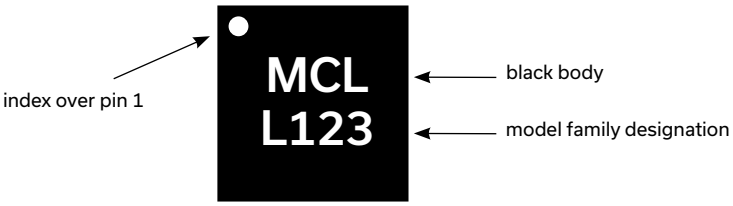

Marking may contain other features or characters for internal lot control

Low Pass Filter

XLF-123+

50Ω DC to 12200 MHz

TYPICAL PERFORMANCE DATA AT 25°C

Frequency (MHz)	Insertion Loss (dB)	VSWR (:1)
10	0.39	1.01
100	0.35	1.02
200	0.37	1.04
400	0.42	1.06
800	0.50	1.13
1600	0.66	1.19
3200	0.83	1.15
5000	0.99	1.24
7000	1.05	1.24
9000	1.19	1.37
11000	1.63	1.72
12200	1.79	1.56
15000	3.04	1.47
18100	15.60	1.29
19000	26.46	1.57
21000	30.52	3.49
23000	21.89	2.33
25000	21.74	1.46
27000	27.66	2.31
29000	21.90	3.86

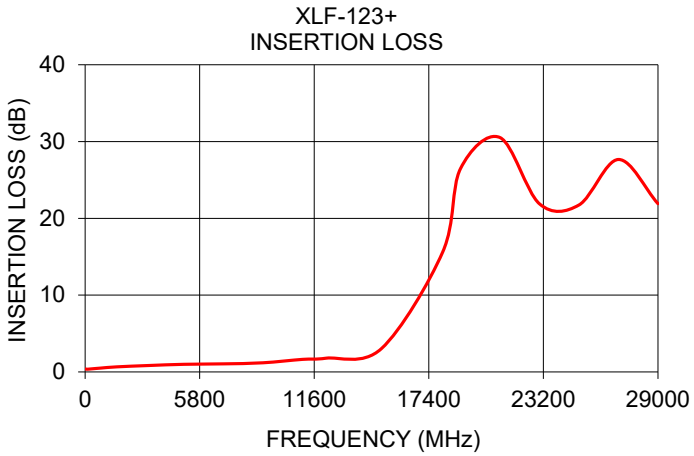

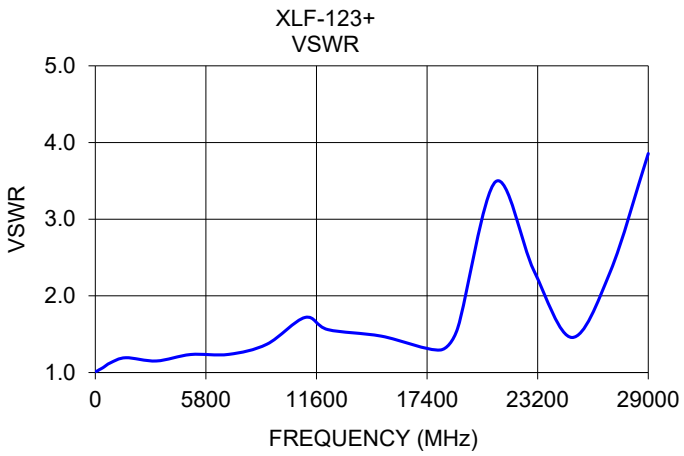

Low Pass Filter

XLF-123+

50Ω DC to 12200 MHz

ADDITIONAL DETAILED TECHNICAL INFORMATION IS AVAILABLE ON OUR DASH BOARD. TO ACCESS CLICK HERE

Performance Data and Graphs	Data Graphs S-Parameter (S3P Files) Data Set (.zip file)
Case Style	DQ1225 Plastic package, exposed paddle lead finish: matte-tin
Tape & Reel **Standard quantities available on reel**	F66 7" reels with 20, 50, 100, 200, 500 ,1000, 2000, 3000 devices
Suggested Layout for PCB Design	PL-451
Evaluation Board	TB-844-123+ (without connectors) TB-844-123C+ (with connectors) B20-118-F1+ connector sold separately
Environmental Ratings	ENV82

ESD RATING

Human body model (HBM): Class 1A (250 to <500V) in accordance with ANSI/ESD 5.1-2001

MSL RATING

Moisture Sensitivity: MSL1 in accordance with IPC/JEDEC J-STD-020D

Low Pass Filter

XLF-123+

50Ω DC to 12200 MHz

REFLECTIONLESS FILTER APPLICATION NOTE

Application Circuit Example: Pairing mixers with reflectionless filters to improve system dynamic range

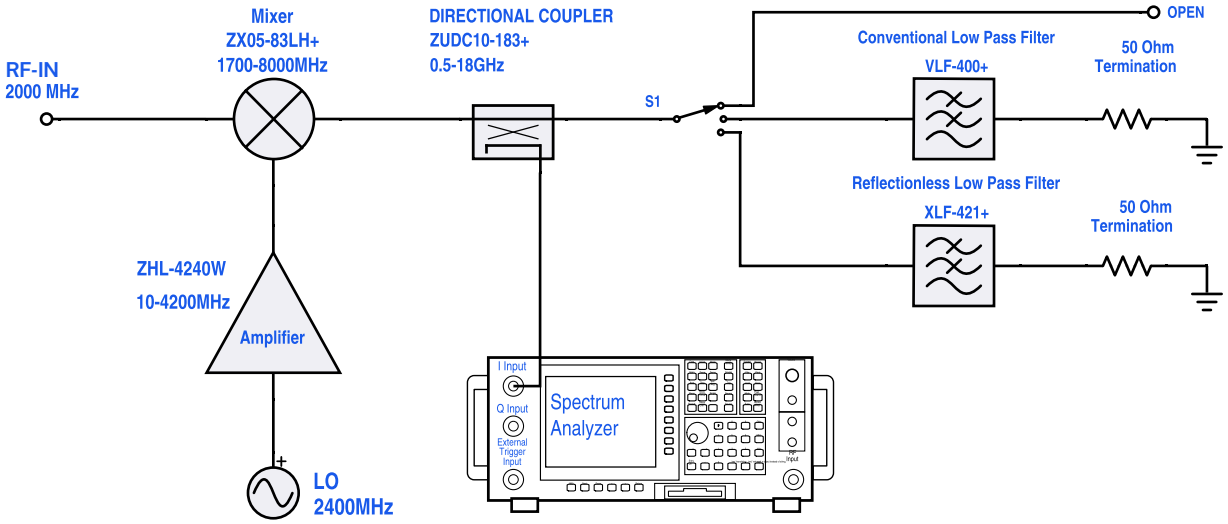

Test block diagram: IF output reflection spectrum with single input frequency

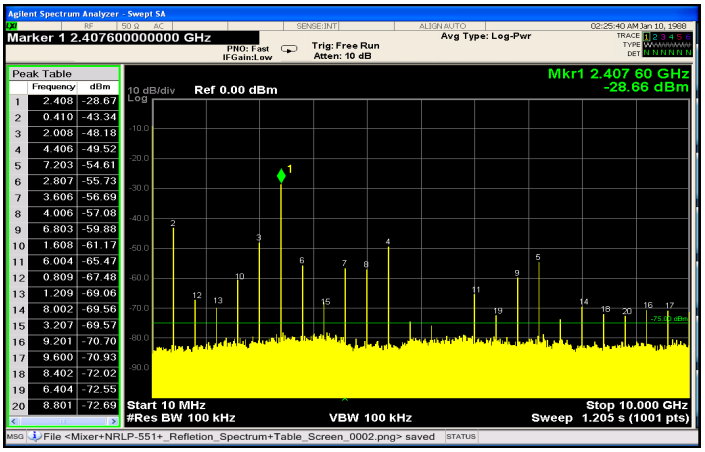

Figure 1. IF output reflection spectrum without filter

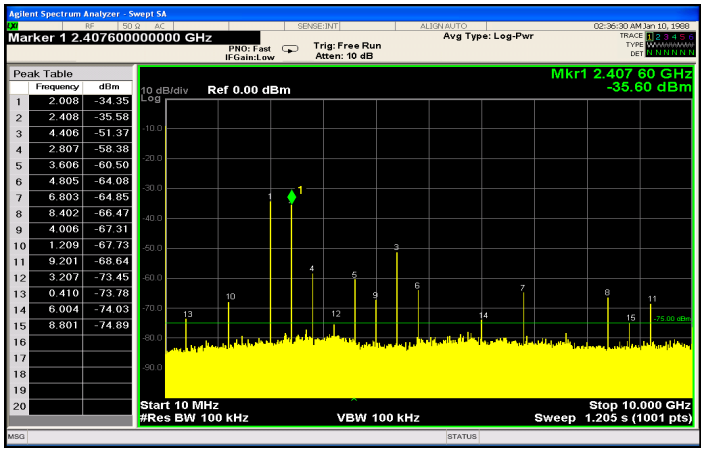

Figure 2. IF output reflection spectrum with conventional filter

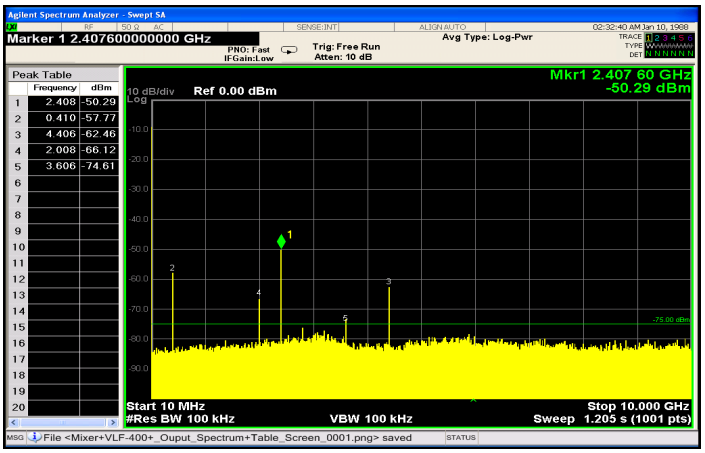

An application circuit was assembled to measure the IF reflection spectrum at the output of a mixer when the mixer was paired with a conventional filter versus a reflectionless filter.

While the conventional filter reduces the reflections present when the mixer is used alone (no filter), the reflectionless filter virtually eliminates those reflections altogether.

The reflected signal at marker 1 in the figures above exhibits a reduction of more than 20 dB from -28.7 dBm to -50.3 dBm when the reflectionless filter is used as compared to the conventional filter, thus eliminating unwanted spurious mixing products and improvingsystem dynamic range.

For more information, refer to application note AN-75-007

NOTES

A. Performance and quality attributes and conditions not expressly stated in this specification document are intended to be excluded and do not form a part of this specification document.

B. Electrical specifications and performance data contained in this specification document are based on Mini-Circuit's applicable established test performance criteria and measurement instructions.

C. The parts covered by this specification document are subject to Mini-Circuits standard limited warranty and terms and conditions (collectively, "Standard Terms"); Purchasers of this part are entitled to the rights and benefits contained therein. For a full statement of the standard terms and the exclusive rights and remedies thereunder, please visit Mini-Circuits' website at www.minicircuits.com/MCLStore/terms.jsp