RoHS Compliant

Rev.	SIGN	DATE	DESCRIPTION	APPROVER
A0		2023.10.20		Guoxue
THIS IS CAD DRAWING, DO NOT REVISE MANUALLY!!!				

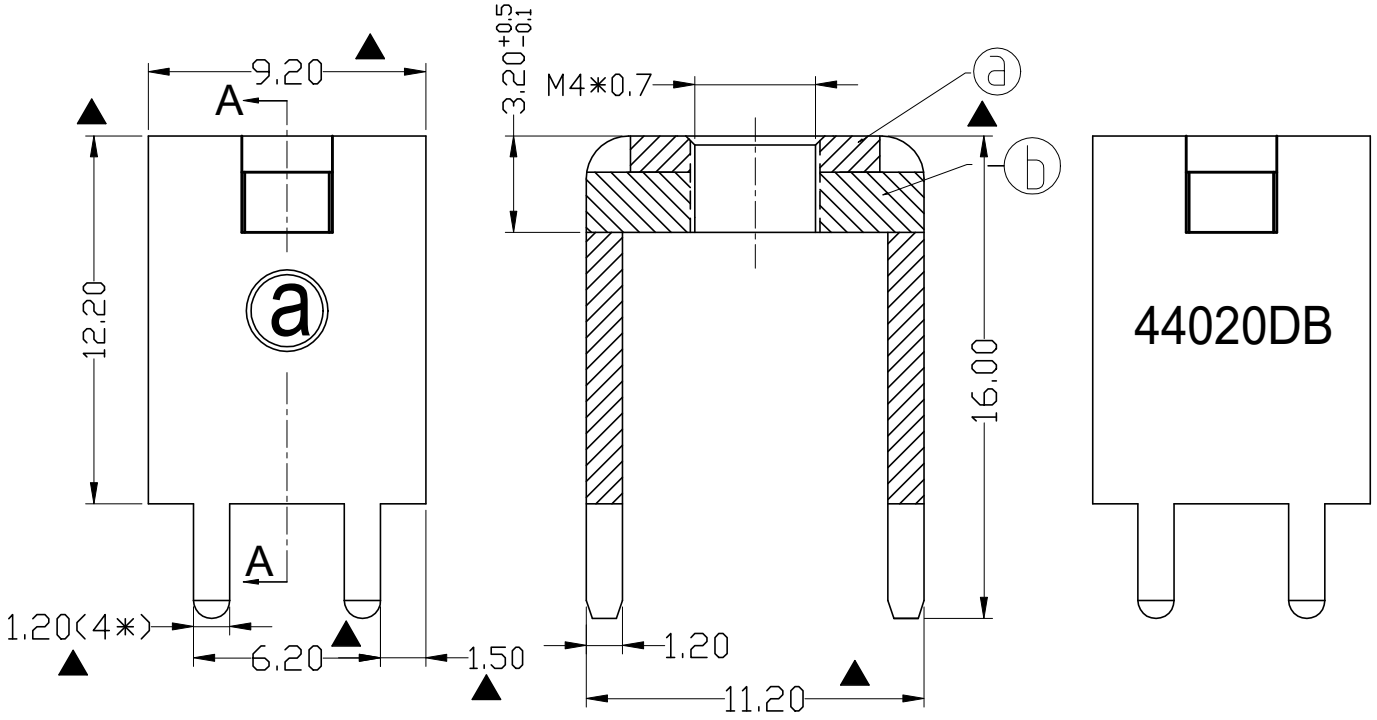

Technical Specification:

1. Current: 40A.
2. Torque: 13 lbf.in.
3. Mark"▲" is the Critical dimension.

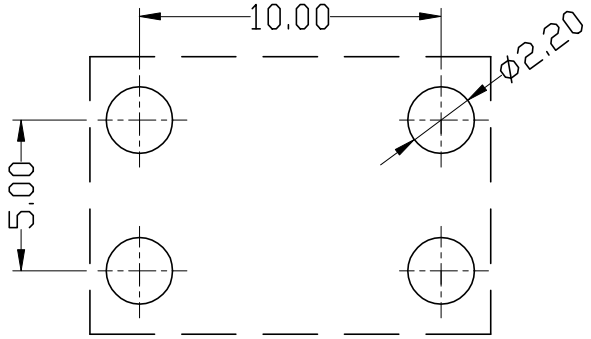

PCB LAYOUT

ITEM	PART NAME	DESCRIPTION	Q`ty
ⓑ	Spacer	Steel , Matte Tin Plated	1PCS
ⓐ	terminal	Copper alloy, Matte Tin Plated	1PCS

Amphenol ANYTEK

CUSTOMER COPY
ALL RIGHTS RESERVED. REPRODUCTION OR ISSUE TO THIRD PARTIES IN ANY FORM WHATEVER IS NOT PERMITTED WITHOUTWRITTEN AUTHORITY FROM THE PROPRIETOR. PROPERTY OF ANYTEK TECHNOLOGY CO., LTD

TITLE	AMT44020DB terminal				
PART NO.	AMT0440020DB0000G			DWG NO.	8AMT0015
APPROVED	CHECKED	DESIGNED	DRAWN	CUST NO.	
		Guoxue 2023.10.17	Guoxue 2023.10.17	UNIT: mm	
				SCALE: NONE	
				SHEET: 01/01	REV.: A0

Tolerance	
>30	±0.60
6-30	±0.40
0-6	±0.30
ANGLES	±1°