AiP74HC/HCT32
Quad 2-input Or Gate

Product Specification

Specification Revision History：

Version	Date	Description
2012-05-A1	2012-05	New
2021-11-A2	2021-11	Modify Ordering Information; Modify ambient temperature to -40℃~+105℃ and add electrical characteristics of -40℃~+105℃
2021-12-A3	2021-12	Modify Ordering Information

1、General Description

The AiP74HC/HCT32 is a quad 2-input OR gate. Inputs include clamp diodes. This enables the use of current limiting resistors to interface inputs to voltages in excess of V_{CC}.

Features:

- Input levels:
  For AiP74HC32: CMOS level
  For AiP74HCT32: TTL level
- Specified from -40℃ to +105℃
- Packaging information: DIP14/SOP14/TSSOP14

i-core

Ordering Information:

Tube packing specifications:

Part number	Packaging form	Marking code	Tube quantity	Boxed tube quantity	Boxed quantity	Notes
AiP74HC32DA14.TB	DIP14	74HC32	25 PCS/tube	40 tube/box	1000 PCS/box	Dimensions of plastic enclosure: 19.0mm×6.4mm Pin spacing: 2.54mm
AiP74HCT32DA14.TB	DIP14	74HCT32	25 PCS/tube	40 tube/box	1000 PCS/box	Dimensions of plastic enclosure: 19.0mm×6.4mm Pin spacing: 2.54mm
AiP74HC32SA14.TB	SOP14	74HC32	50 PCS/tube	200 tube/box	10000 PCS/box	Dimensions of plastic enclosure: 8.7mm×3.9mm Pin spacing: 1.27mm
AiP74HCT32SA14.TB	SOP14	74HCT32	50 PCS/tube	200 tube/box	10000 PCS/box	Dimensions of plastic enclosure: 8.7mm×3.9mm Pin spacing: 1.27mm
AiP74HC32TA14.TB	TSSOP14	74HC32	92 PCS/tube	100 tube/box	9200 PCS/box	Dimensions of plastic enclosure: 5.0mm×4.4mm Pin spacing: 0.65mm
AiP74HCT32TA14.TB	TSSOP14	74HCT32	92 PCS/tube	100 tube/box	9200 PCS/box	Dimensions of plastic enclosure: 5.0mm×4.4mm Pin spacing: 0.65mm

Reel packing specifications:

Part number	Packaging form	Marking code	Reel quantity	Boxed reel quantity	Notes
AiP74HC32SA14.TR	SOP14	74HC32	4000 PCS/reel	8000 PCS/box	Dimensions of plastic enclosure: 8.7mm×3.9mm Pin spacing: 1.27mm
AiP74HCT32SA14.TR	SOP14	74HCT32	4000 PCS/reel	8000 PCS/box	Dimensions of plastic enclosure: 8.7mm×3.9mm Pin spacing: 1.27mm
AiP74HC32TA14.TR	TSSOP14	74HC32	5000 PCS/reel	10000 PCS/box	Dimensions of plastic enclosure: 5.0mm×4.4mm Pin spacing: 0.65mm
AiP74HCT32TA14.TR	TSSOP14	74HCT32	5000 PCS/reel	10000 PCS/box	Dimensions of plastic enclosure: 5.0mm×4.4mm Pin spacing: 0.65mm

Note: If the physical information is inconsistent with the ordering information, please refer to the actual product.

i-CORE

2、Block Diagram And Pin Description

2.1、Block Diagram

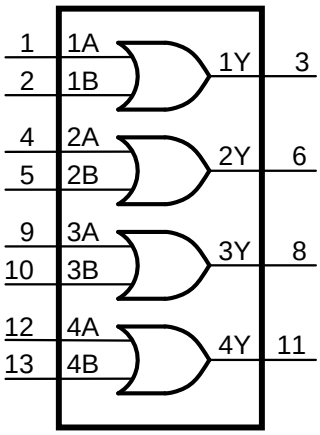

Figure 1. Logic symbol

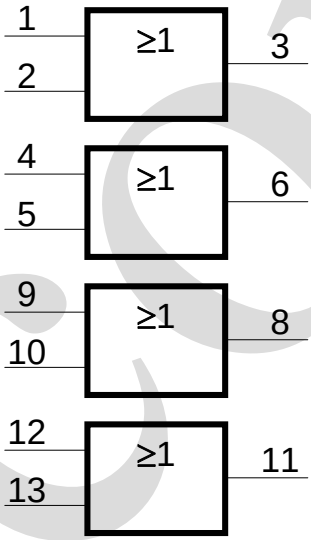

Figure 2. IEC logic symbol

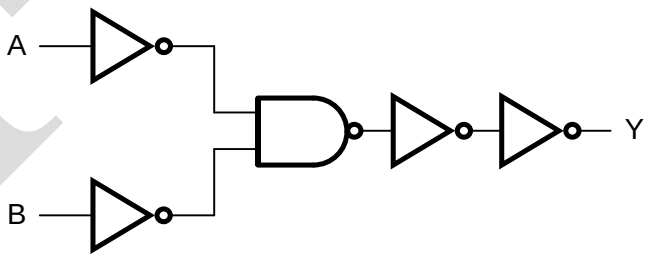

Figure 3. Logic diagram for one gate

2.2、Pin Configurations

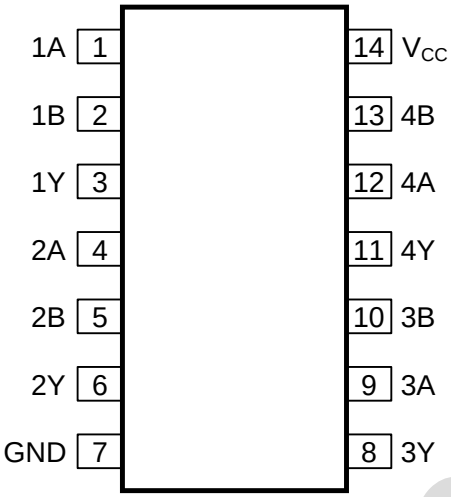

2.3、Pin Description

Pin No.	Pin Name	Description
1	1A	data input
2	1B	data input
3	1Y	data output
4	2A	data input
5	2B	data input
6	2Y	data output
7	GND	ground (0V)
8	3Y	data output
9	3A	data input
10	3B	data input
11	4Y	data output
12	4A	data input
13	4B	data input
14	V_{CC}	supply voltage

2.4、Function Table

Input		Output
nA	**nB**	**nY**
L	L	L
L	H	H
H	L	H
H	H	H

Note: H=HIGH voltage level; L=LOW voltage level.

3、Electrical Parameter

3.1、Absolute Maximum Ratings

(Voltages are referenced to GND (ground=0V), unless otherwise specified.)

Parameter	Symbol	Conditions		Min.	Max.	Unit
supply voltage	V_{CC}	-		-0.5	+7	V
input clamping current	I_{IK}	V_I<-0.5V or V_I>V_{CC}+0.5V		-	±20	mA
output clamping current	I_{OK}	V_O<-0.5V or V_O>V_{CC}+0.5V		-	±20	mA
output current	I_O	-0.5V<V_O<V_{CC}+0.5V		-	±25	mA
supply current	I_{CC}	-		-	50	mA
ground current	I_{GND}	-		-50	-	mA
total power dissipation	P_{tot}	-		-	500	mW
storage temperature	T_{stg}	-		-65	+150	℃
soldering temperature	T_L	10s	DIP	245		℃
			SOP	250		

Note:

[1] For DIP14 packages: above 70℃ the value of P_{tot} derates linearly with 12mW/K.

[2] For SOP14 packages: above 70℃ the value of P_{tot} derates linearly with 8mW/K.

[3] For (T)SSOP14 packages: above 60℃ the value of P_{tot} derates linearly with 5.5mW/K.

3.2、Recommended Operating Conditions

Parameter	Symbol	Conditions	Min.	Typ.	Max.	Unit
AiP74HC32						
supply voltage	V_{CC}	-	2.0	5.0	6.0	V
input voltage	V_I	-	0	-	V_{CC}	V
output voltage	V_O	-	0	-	V_{CC}	V
input transition rise and fall rate	Δt/ΔV	V_{CC}=2.0V	-	-	625	ns/V
		V_{CC}=4.5V	-	1.67	139	ns/V
		V_{CC}=6.0V	-	-	83	ns/V
ambient temperature	T_{amb}	-	-40	-	+105	℃
AiP74HCT32						
supply voltage	V_{CC}	-	4.5	5.0	5.5	V
input voltage	V_I	-	0	-	V_{CC}	V
output voltage	V_O	-	0	-	V_{CC}	V
input transition rise and fall rate	Δt/ΔV	V_{CC}=4.5V	-	1.67	139	ns/V
ambient temperature	T_{amb}	-	-40	-	+105	℃

3.3、Electrical Characteristics

3.3.1、DC Characteristics 1

(T_{amb}=25℃, voltages are referenced to GND (ground=0V), unless otherwise specified.)

Parameter	Symbol	Conditions		Min.	Typ.	Max.	Unit
AiP74HC32							
HIGH-level input voltage	V_{IH}	V_{CC}=2.0V		1.5	1.2	-	V
		V_{CC}=4.5V		3.15	2.4	-	V
		V_{CC}=6.0V		4.2	3.2	-	V
LOW-level input voltage	V_{IL}	V_{CC}=2.0V		-	0.8	0.5	V
		V_{CC}=4.5V		-	2.1	1.35	V
		V_{CC}=6.0V		-	2.8	1.8	V
HIGH-level output voltage	V_{OH}	V_I=V_{IH} or V_{IL}	I_O=-20uA; V_{CC}=2.0V	1.9	2.0	-	V
			I_O=-20uA; V_{CC}=4.5V	4.4	4.5	-	V
			I_O=-20uA; V_{CC}=6.0V	5.9	6.0	-	V
			I_O=-4.0mA; V_{CC}=4.5V	3.98	4.32	-	V
			I_O=-5.2mA; V_{CC}=6.0V	5.48	5.81	-	V
LOW-level output voltage	V_{OL}	V_I=V_{IH} or V_{IL}	I_O=20uA; V_{CC}=2.0V	-	0	0.1	V
			I_O=20uA; V_{CC}=4.5V	-	0	0.1	V
			I_O=20uA; V_{CC}=6.0V	-	0	0.1	V
			I_O=4.0mA; V_{CC}=4.5V	-	0.15	0.26	V
			I_O=5.2mA; V_{CC}=6.0V	-	0.16	0.26	V
input leakage current	I_I	V_I=V_{CC} or GND; V_{CC}=6.0V		-	-	±0.1	uA
supply current	I_{CC}	V_I=V_{CC} or GND; I_O=0A; V_{CC}=6.0V		-	-	2.0	uA
input capacitance	C_I	-		-	3.5	-	pF
AiP74HCT32							
HIGH-level input voltage	V_{IH}	V_{CC}=4.5V to 5.5V		2.0	1.6	-	V
LOW-level input voltage	V_{IL}	V_{CC}=4.5V to 5.5V		-	1.2	0.8	V
HIGH-level output voltage	V_{OH}	V_I=V_{IH} or V_{IL}	I_O=-20uA; V_{CC}=4.5V	4.4	4.5	-	V
			I_O=-4.0mA; V_{CC}=4.5V	3.98	4.32	-	V
LOW-level output voltage	V_{OL}	V_I=V_{IH} or V_{IL}	I_O=20uA; V_{CC}=4.5V	-	0	0.1	V
			I_O=5.2mA; V_{CC}=4.5V	-	0.15	0.25	V
input leakage current	I_I	V_I=V_{CC} or GND; V_{CC}=5.5V		-	-	±0.1	uA
supply current	I_{CC}	V_I=V_{CC} or GND; I_O=0A; V_{CC}=5.5V		-	-	2.0	uA
additional supply current	ΔI_{CC}	per input pin; V_I=V_{CC}-2.1V; I_O=0A; other inputs at V_{CC} or GND; V_{CC}=4.5V to 5.5V		-	-	430	uA
input capacitance	C_I	-		-	3.5	-	pF

3.3.2、DC Characteristics 2

(T_{amb}=-40℃ to +85℃, voltages are referenced to GND (ground=0V), unless otherwise specified.)

Parameter	Symbol	Conditions		Min.	Typ.	Max.	Unit
AiP74HC32							
HIGH-level input voltage	V_{IH}	V_{CC}=2.0V		1.5	-	-	V
		V_{CC}=4.5V		3.15	-	-	V
		V_{CC}=6.0V		4.2	-	-	V
LOW-level input voltage	V_{IL}	V_{CC}=2.0V		-	-	0.5	V
		V_{CC}=4.5V		-	-	1.35	V
		V_{CC}=6.0V		-	-	1.8	V
HIGH-level output voltage	V_{OH}	V_I=V_{IH} or V_{IL}	I_O=-20uA; V_{CC}=2.0V	1.9	-	-	V
			I_O=-20uA; V_{CC}=4.5V	4.4	-	-	V
			I_O=-20uA; V_{CC}=6.0V	5.9	-	-	V
			I_O=-4.0mA; V_{CC}=4.5V	3.84	-	-	V
			I_O=-5.2mA; V_{CC}=6.0V	5.34	-	-	V
LOW-level output voltage	V_{OL}	V_I=V_{IH} or V_{IL}	I_O=20uA; V_{CC}=2.0V	-	-	0.1	V
			I_O=20uA; V_{CC}=4.5V	-	-	0.1	V
			I_O=20uA; V_{CC}=6.0V	-	-	0.1	V
			I_O=4.0mA; V_{CC}=4.5V	-	-	0.33	V
			I_O=5.2mA; V_{CC}=6.0V	-	-	0.33	V
input leakage current	I_I	V_I=V_{CC} or GND; V_{CC}=6.0V		-	-	±1	uA
supply current	I_{CC}	V_I=V_{CC} or GND; I_O=0A; V_{CC}=6.0V		-	-	20	uA
AiP74HCT32							
HIGH-level input voltage	V_{IH}	V_{CC}=4.5V to 5.5V		2.0	-	-	V
LOW-level input voltage	V_{IL}	V_{CC}=4.5V to 5.5V		-	-	0.8	V
HIGH-level output voltage	V_{OH}	V_I=V_{IH} or V_{IL}	I_O=-20uA; V_{CC}=4.5V	4.4	-	-	V
			I_O=-4.0mA; V_{CC}=4.5V	3.84	-	-	V
LOW-level output voltage	V_{OL}	V_I=V_{IH} or V_{IL}	I_O=20uA; V_{CC}=4.5V	-	-	0.1	V
			I_O=5.2mA; V_{CC}=4.5V	-	-	0.33	V
input leakage current	I_I	V_I=V_{CC} or GND; V_{CC}=5.5V		-	-	±1	uA
supply current	I_{CC}	V_I=V_{CC} or GND; I_O=0A; V_{CC}=5.5V		-	-	20	uA
additional supply current	ΔI_{CC}	per input pin; V_I=V_{CC}-2.1V; I_O=0A; other inputs at V_{CC} or GND; V_{CC}=4.5V to 5.5V		-	-	540	uA

3.3.3、DC Characteristics 3

(T_{amb}=-40℃ to +105℃, voltages are referenced to GND (ground=0V), unless otherwise specified.)

Parameter	Symbol	Conditions		Min.	Typ.	Max.	Unit
AiP74HC32							
HIGH-level input voltage	V_{IH}	V_{CC}=2.0V		1.5	-	-	V
		V_{CC}=4.5V		3.15	-	-	V
		V_{CC}=6.0V		4.2	-	-	V
LOW-level input voltage	V_{IL}	V_{CC}=2.0V		-	-	0.5	V
		V_{CC}=4.5V		-	-	1.35	V
		V_{CC}=6.0V		-	-	1.8	V
HIGH-level output voltage	V_{OH}	V_I=V_{IH} or V_{IL}	I_O=-20uA; V_{CC}=2.0V	1.9	-	-	V
			I_O=-20uA; V_{CC}=4.5V	4.4	-	-	V
			I_O=-20uA; V_{CC}=6.0V	5.9	-	-	V
			I_O=-4.0mA; V_{CC}=4.5V	3.7	-	-	V
			I_O=-5.2mA; V_{CC}=6.0V	5.2	-	-	V
LOW-level output voltage	V_{OL}	V_I=V_{IH} or V_{IL}	I_O=20uA; V_{CC}=2.0V	-	-	0.1	V
			I_O=20uA; V_{CC}=4.5V	-	-	0.1	V
			I_O=20uA; V_{CC}=6.0V	-	-	0.1	V
			I_O=4.0mA; V_{CC}=4.5V	-	-	0.4	V
			I_O=5.2mA; V_{CC}=6.0V	-	-	0.4	V
input leakage current	I_I	V_I=V_{CC} or GND; V_{CC}=6.0V		-	-	±1	uA
supply current	I_{CC}	V_I=V_{CC} or GND; I_O=0A; V_{CC}=6.0V		-	-	40	uA
AiP74HCT32							
HIGH-level input voltage	V_{IH}	V_{CC}=4.5V to 5.5V		2.0	-	-	V
LOW-level input voltage	V_{IL}	V_{CC}=4.5V to 5.5V		-	-	0.8	V
HIGH-level output voltage	V_{OH}	V_I=V_{IH} or V_{IL}	I_O=-20uA; V_{CC}=4.5V	4.4	-	-	V
			I_O=-4.0mA; V_{CC}=4.5V	3.7	-	-	V
LOW-level output voltage	V_{OL}	V_I=V_{IH} or V_{IL}	I_O=20uA; V_{CC}=4.5V	-	-	0.1	V
			I_O=5.2mA; V_{CC}=4.5V	-	-	0.4	V
input leakage current	I_I	V_I=V_{CC} or GND; V_{CC}=5.5V		-	-	±1	uA
supply current	I_{CC}	V_I=V_{CC} or GND; I_O=0A; V_{CC}=5.5V		-	-	40	uA
additional supply current	ΔI_{CC}	per input pin; V_I=V_{CC}-2.1V; I_O=0A; other inputs at V_{CC} or GND; V_{CC}=4.5V to 5.5V		-	-	590	uA

3.3.4、AC Characteristics 1

(T_{amb}=25℃, voltages are referenced to GND (ground=0V), unless otherwise specified.)

Parameter	Symbol	Conditions		Min.	Typ.	Max.	Unit
AiP74HC32							
nA, nB to nY propagation delay	t_{pd}	see Figure 5[1]	V_{CC}=2.0V	-	22	90	ns
			V_{CC}=4.5V	-	8	18	ns
			V_{CC}=5.0V;C_L=15pF	-	6	-	ns
			V_{CC}=6.0V	-	6	15	ns
transition time	t_t	see Figure 5[2]	V_{CC}=2.0V	-	19	75	ns
			V_{CC}=4.5V	-	7	15	ns
			V_{CC}=6.0V	-	6	13	ns
power dissipation capacitance	C_{PD}	per package; V_I= GND to V_{CC}[3]		-	16	-	pF
AiP74HCT32							
nA, nB to nY propagation delay	t_{pd}	see Figure 5[1]	V_{CC}=4.5V	-	11	24	ns
			V_{CC}=5.0V;C_L=15pF	-	9	-	ns
transition time	t_t	see Figure 5[2]	V_{CC}=4.5V	-	7	15	ns
power dissipation capacitance	C_{PD}	per package; V_I= GND to V_{CC}–1.5V[3]		-	28	-	pF

Note:

[1] t_{pd} is the same as t_{PLH} and t_{PHL}.

[2] t_t is the same as t_{THL} and t_{TLH}.

[3] C_{PD} is used to determine the dynamic power dissipation (P_D in uW).

$P_D=(C_{PD}\times V_{CC}^2\times f_i\times N)+\sum(C_L\times V_{CC}^2\times f_o)$ where:

f_i=input frequency in MHz;

f_o=output frequency in MHz;

C_L=output load capacitance in pF;

V_{CC}=supply voltage in V;

N=number of inputs switching;

$\sum(C_L\times V_{CC}^2\times f_o)$=sum of outputs.

3.3.5、AC Characteristics 2

(T_{amb}=-40℃ to +85℃, voltages are referenced to GND (ground=0V), unless otherwise specified.)

Parameter	Symbol	Conditions		Min.	Typ.	Max.	Unit
AiP74HC32							
nA, nB to nY propagation delay	t_{pd}	see Figure 5[1]	V_{CC}=2.0V	-	-	115	ns
			V_{CC}=4.5V	-	-	23	ns
			V_{CC}=6.0V	-	-	20	ns
transition time	t_t	see Figure 5[2]	V_{CC}=2.0V	-	-	95	ns
			V_{CC}=4.5V	-	-	19	ns
			V_{CC}=6.0V	-	-	16	ns
AiP74HCT32							
nA, nB to nY propagation delay	t_{pd}	see Figure 5[1]	V_{CC}=4.5V	-	-	30	ns
transition time	t_t	see Figure 5[2]	V_{CC}=4.5V	-	-	19	ns

Note:

[1] t_{pd} is the same as t_{PLH} and t_{PHL}.

[2] t_t is the same as t_{THL} and t_{TLH}.

3.3.6、AC Characteristics 3

(T_{amb}=-40℃ to +105℃, voltages are referenced to GND (ground=0V), unless otherwise specified.)

Parameter	Symbol	Conditions		Min.	Typ.	Max.	Unit
AiP74HC32							
nA, nB to nY propagation delay	t_{pd}	see Figure 5[1]	V_{CC}=2.0V	-	-	135	ns
			V_{CC}=4.5V	-	-	27	ns
			V_{CC}=6.0V	-	-	23	ns
transition time	t_t	see Figure 5[2]	V_{CC}=2.0V	-	-	110	ns
			V_{CC}=4.5V	-	-	22	ns
			V_{CC}=6.0V	-	-	19	ns
AiP74HCT32							
nA, nB to nY propagation delay	t_{pd}	see Figure 5[1]	V_{CC}=4.5V	-	-	36	ns
transition time	t_t	see Figure 5[2]	V_{CC}=4.5V	-	-	22	ns

Note:

[1] t_{pd} is the same as t_{PLH} and t_{PHL}.

[2] t_t is the same as t_{THL} and t_{TLH}.

4、Testing Circuit

4.1、AC Testing Circuit

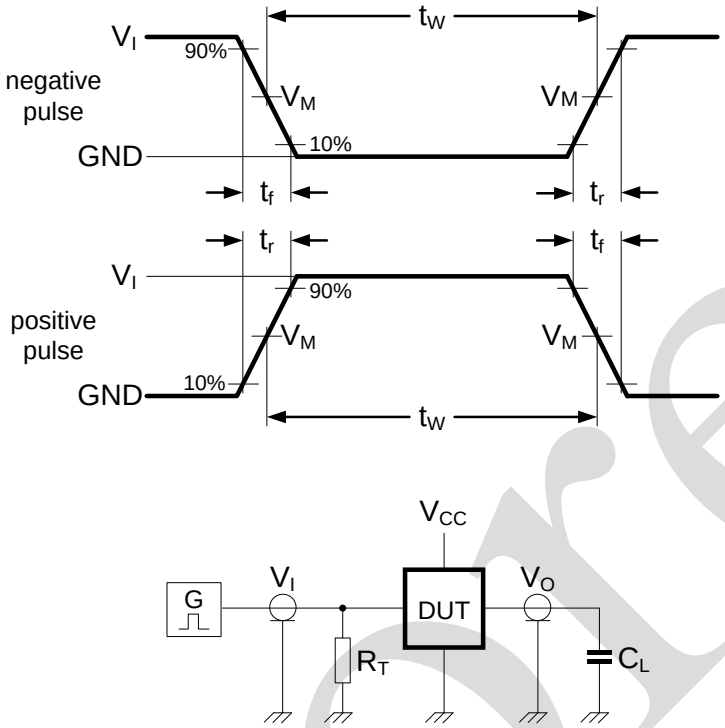

Figure 4. Test circuit for measuring switching times

Definitions for test circuit:

C_L=load capacitance including jig and probe capacitance.

R_T=termination resistance should be equal to the output impedance Z_o of the pulse generator.

4.2、AC Testing Waveforms

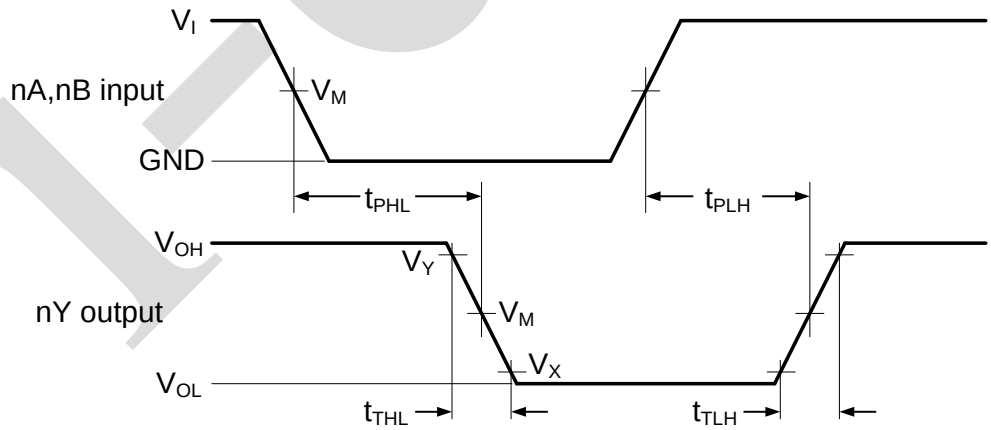

Figure 5. Input to output propagation delays

4.3、Measurement Points

Type	Input	Output		
	V_M	V_M	V_X	V_Y
AiP74HC32	$0.5\times V_{CC}$	$0.5\times V_{CC}$	$0.1\times V_{CC}$	$0.9\times V_{CC}$
AiP74HCT32	1.3V	1.3V	$0.1\times V_{CC}$	$0.9\times V_{CC}$

4.4、Test Data

Type	Input		Load	Test
	V_I	t_r , t_f	C_L	
AiP74HC32	V_{CC}	6.0ns	15pF, 50pF	t_{PLH}, t_{PHL}
AiP74HCT32	3.0V	6.0ns	15pF, 50pF	t_{PLH}, t_{PHL}

i-core

5、Package Information

5.1、DIP14

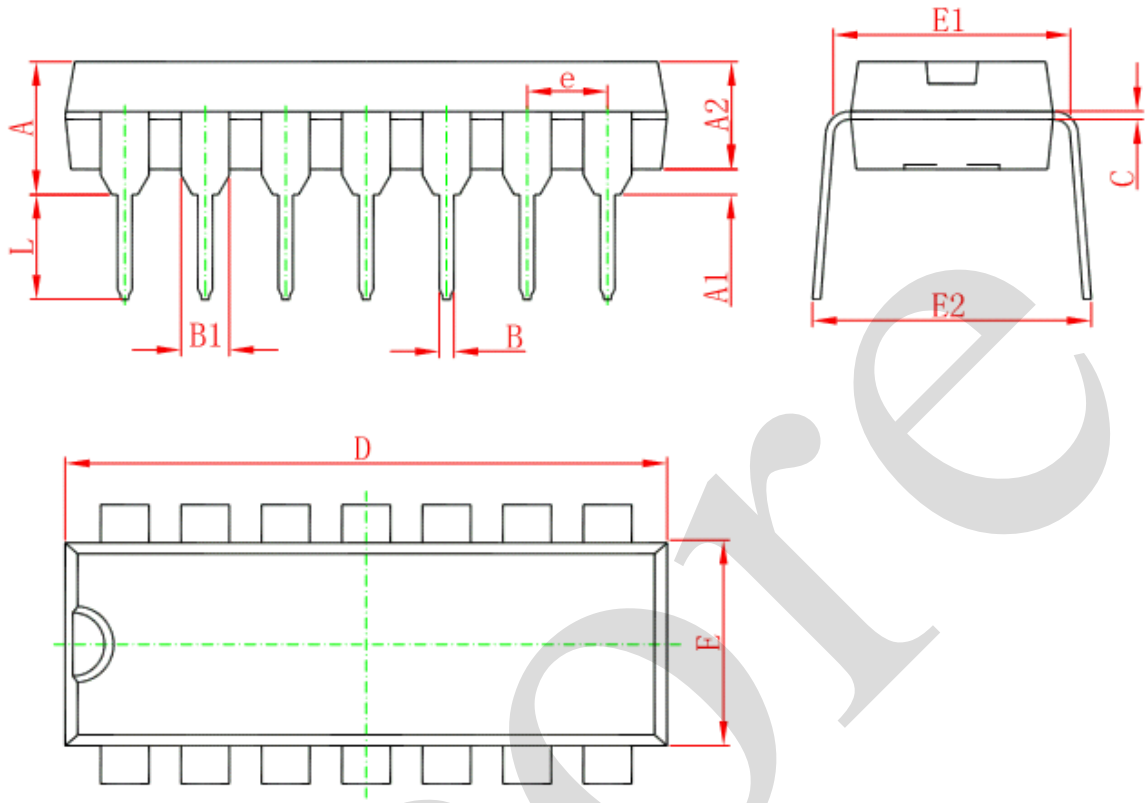

Symbol	Dimensions In Millimeters		Dimensions In Inches	
	Min	Max	Min	Max
A	3.710	4.310	0.146	0.170
A1	0.510		0.020	
A2	3.200	3.600	0.126	0.142
B	0.380	0.570	0.015	0.022
B1	1.524 (BSC)		0.060 (BSC)	
C	0.204	0.360	0.008	0.014
D	18.800	19.200	0.740	0.756
E	6.200	6.600	0.244	0.260
E1	7.320	7.920	0.288	0.312
e	2.540 (BSC)		0.100 (BSC)	
L	3.000	3.600	0.118	0.142
E2	8.400	9.000	0.331	0.354

5.2、SOP14

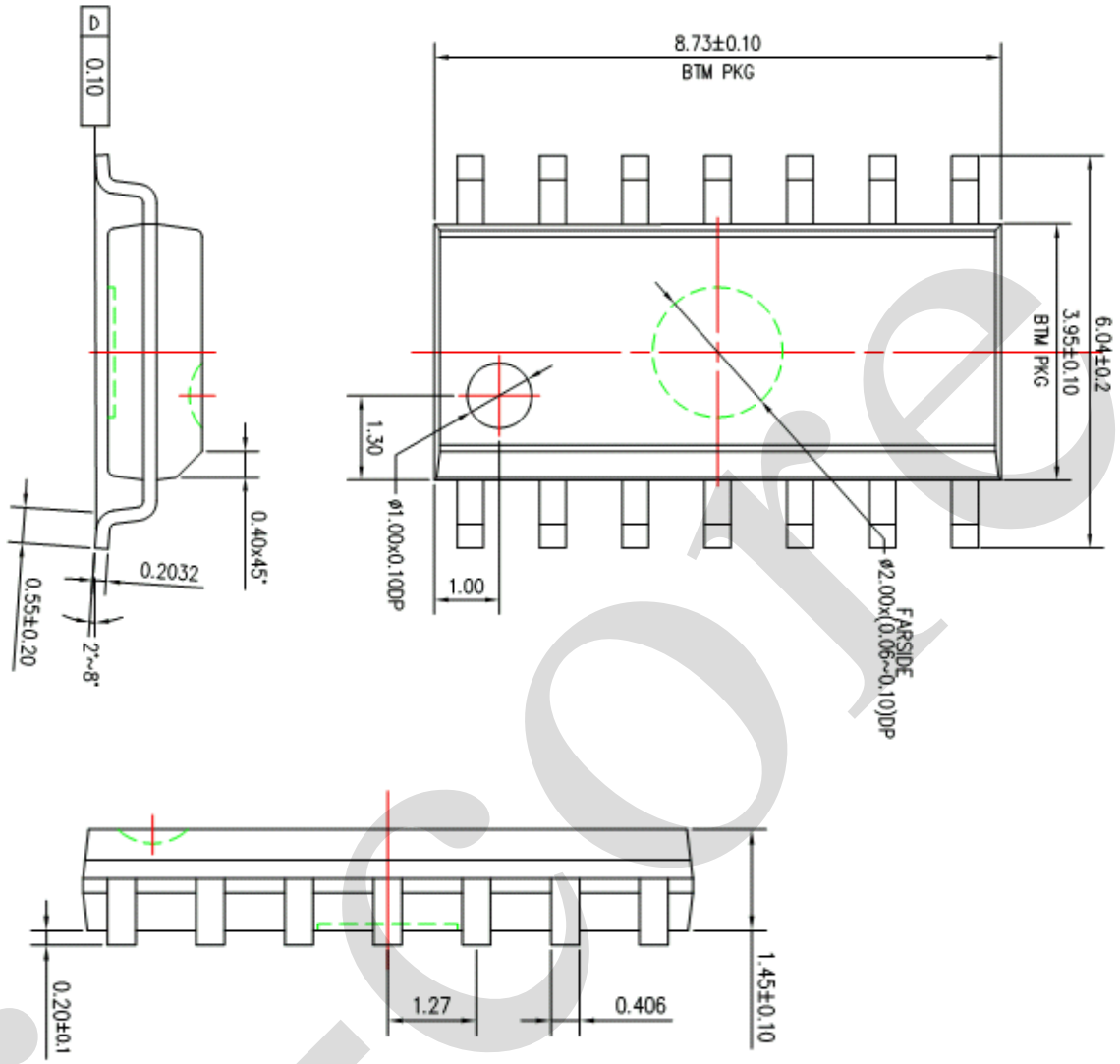
0.10
8.73±0.10
BTM PKG
6.04±0.2
3.95±0.10
BTM PKG
1.30
Ø1.00x0.100P
1.00
Ø2.00x(0.06~0.10)DP
FARSIDE
0.40x45°
0.2032
0.55±0.20
2°~8°
0.20±0.1
1.27
0.406
1.45±0.10

5.3、TSSOP14

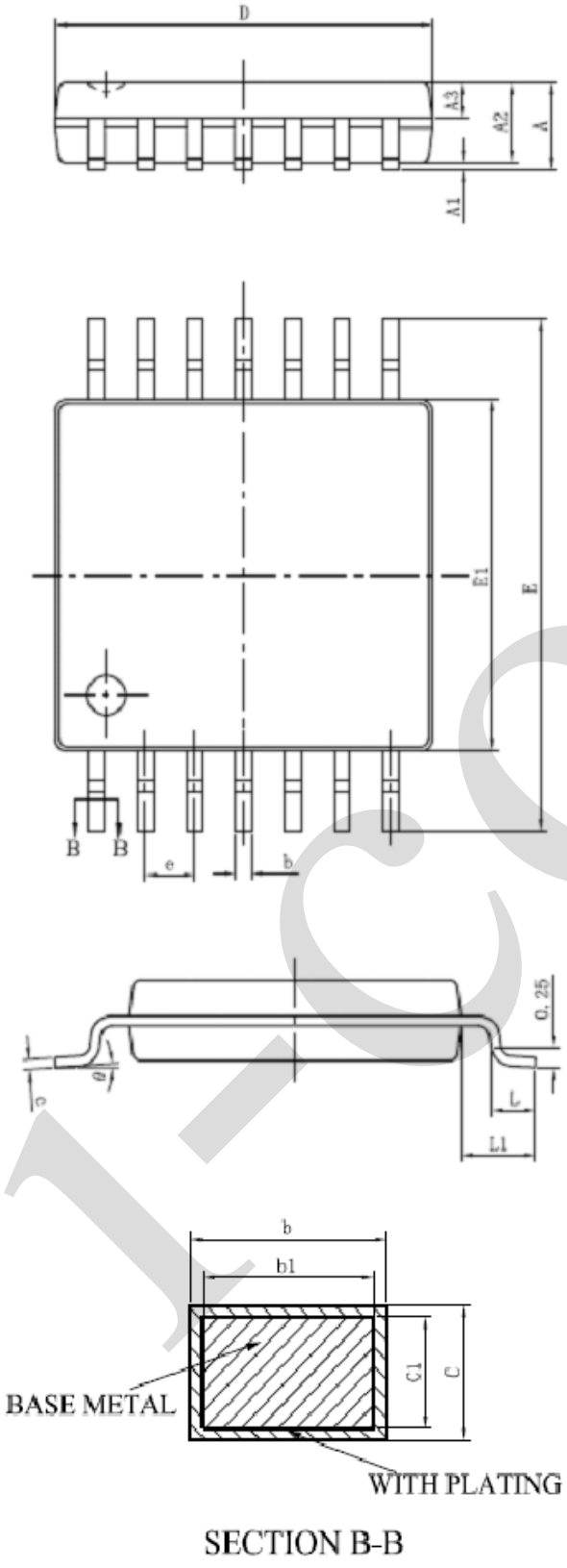

SECTION B-B

SYMBOL	MILLIMETER	
	MIN	MAX
A	—	1.20
A1	0.05	0.15
A2	0.90	1.05
A3	0.39	0.49
b	0.20	0.30
b1	0.19	0.25
c	0.13	0.19
c1	0.12	0.14
D	4.86	5.06
E1	4.30	4.50
E	6.20	6.60
e	0.65BSC	
L	0.45	0.75
L1	1.00BSC	
θ	0	8°

6、Statements And Notes

6.1、The name and content of Hazardous substances or Elements in the product

Part name	Hazardous substances or Elements									
	Lead and lead compounds	Mercury and mercury compounds	Cadmium and cadmium compounds	Hexavalent chromium compounds	Polybrominated biphenyls	Polybrominated biphenyl ethers	Dibutyl phthalate	Butylbenzyl phthalate	Di-2-ethylhexyl phthalate	Diisobutyl phthalate
Lead frame	○	○	○	○	○	○	○	○	○	○
Plastic resin	○	○	○	○	○	○	○	○	○	○
Chip	○	○	○	○	○	○	○	○	○	○
The lead	○	○	○	○	○	○	○	○	○	○
Plastic sheet installed	○	○	○	○	○	○	○	○	○	○
explanation	○：Indicates that the content of hazardous substances or elements in the detection limit of the following the SJ/T11363-2006 standard. ×：Indicates that the content of hazardous substances or elements exceeding the SJ/T11363-2006 Standard limit requirements.									

6.2、Notion

Recommended carefully reading this information before the use of this product;

The information in this document are subject to change without notice;

This information is using to the reference only, the company is not responsible for any loss;

The company is not responsible for the any infringement of the third party patents or other rights of the responsibility.