Features

■ 2.5 to 24 V operation

■ Built-in Pull-Up Resistor

■ 50mA Output Sink Current

■ High Sensitivity

■ Quick Response

■ Operating Temperature: -40°C ~ +150°C

■ Lead Free Packages: SOT-23-3L and SIP-3L ,Available in “Green” Molding Compound (No Br, Sb)

■ Lead Free Finish/ RoHS Compliant

Description

ST2432 device is a chopper-stabilized Hall Effect Sensor that offers a magnetic sensing solution with superior sensitivity stability over temperature and integrated protection features.

Superior high-temperature performance is made possible through dynamic offset cancellation, which reduces the residual offset voltage normally caused by device over molding, temperature dependencies, and thermal stress. Each device includes on a single silicon chip a voltage regulator, Hall-voltage generator, small-signal amplifier, chopper stabilization, Schmitt trigger, and an open-collector output to sink up to 20mA. A south pole of sufficient strength turns the output on; a north pole of sufficient strength is necessary to turn the out off (for UA package).

An onboard regulator permits with supply voltages of 2.8V to 24V which makes the device suitable for a wide range of industrial applications

Pin Assignment

Package (TO-92S)

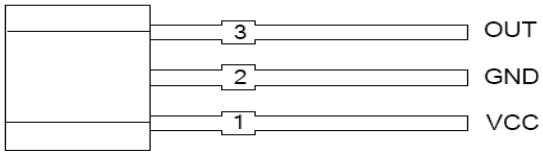

(Front View)

Package (SOT-23-3)

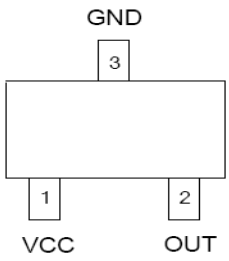

(Top View)

Pin Descriptions

Name	Pin #	Description
Vcc	1	Positive Power Supply
GND	2	Ground
OUT	3	Output Stage

Block Diagram

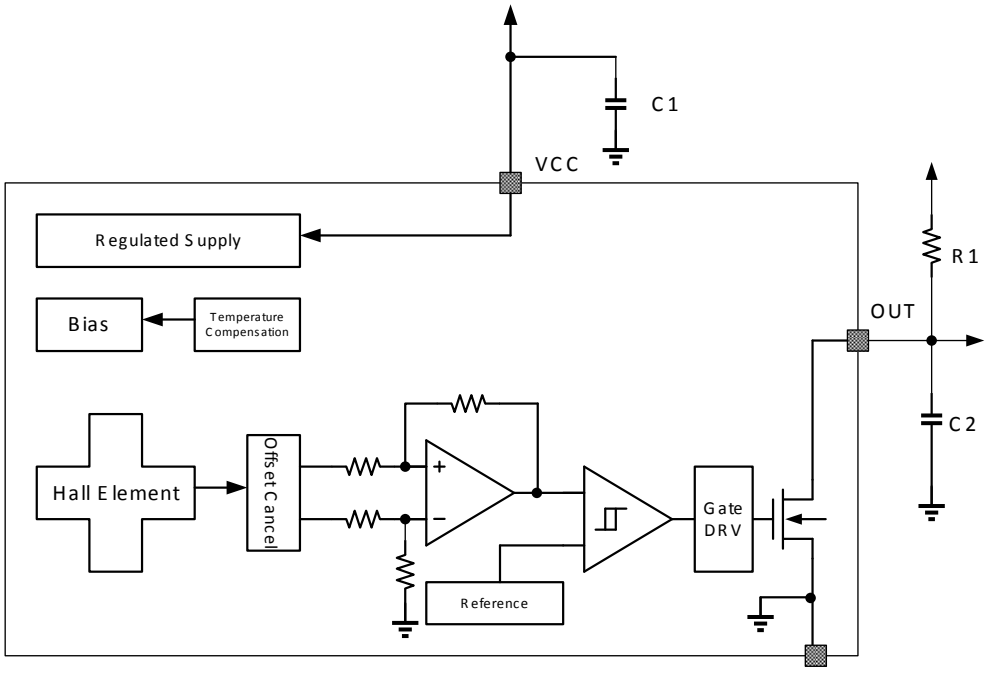

Functional Application Circuit

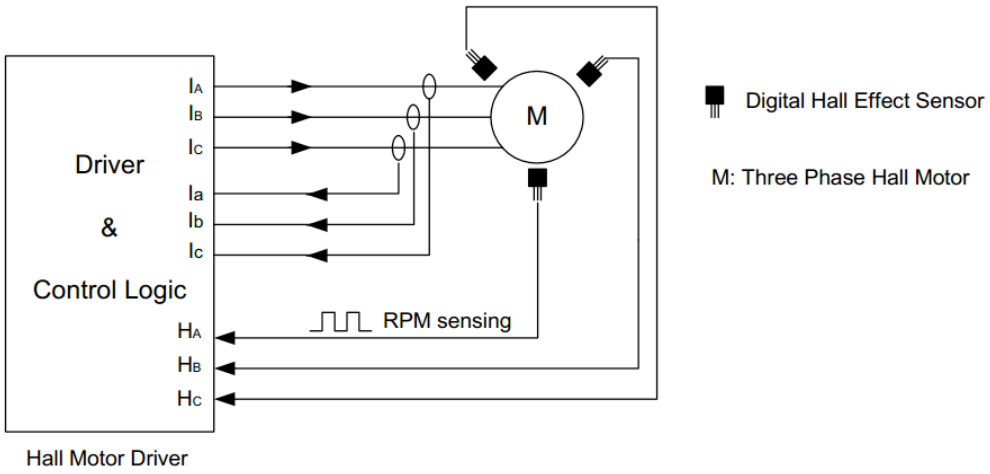

Electrical Characteristics T_A=25□

Parameter	Test Condition	Symbol	Value			Unit
			Min	Typ	Max	
Supply Voltage	Vcc=24V	Vcc	2.5	-	24	V
Output Low Voltage	Vcc=24V Io=25mA, B ≥ BOP	VOL	-	175	400	mV
Output Leakage Current	Vo=24V, B<BRP	IOH	-	<0.5	10	μ A
Supply Current	Vcc=24V Vo open-collector output	Icc	-	1.5	5	mA
Output Rise time	Vcc=12V R L =820 Ω C_L =20pF	tr	-	0.2	2.0	μ S
Output Fall time		tf	-	0.18	2.0	μ S

Magnetic Characteristics (Unit: mT)

Parameter	symbol	Value			Unit
		Min	Typ	Max	
Operate Point	B_{OP}	1	2	5	mT
Release Point	B_{RP}	-5	-2	-1	mT
Hysteresis	B_{hys}	-	4	-	mT

Field Direction Definition

A positive magnetic field is defined as a south pole near the marked side of the package.

TO-92S Package

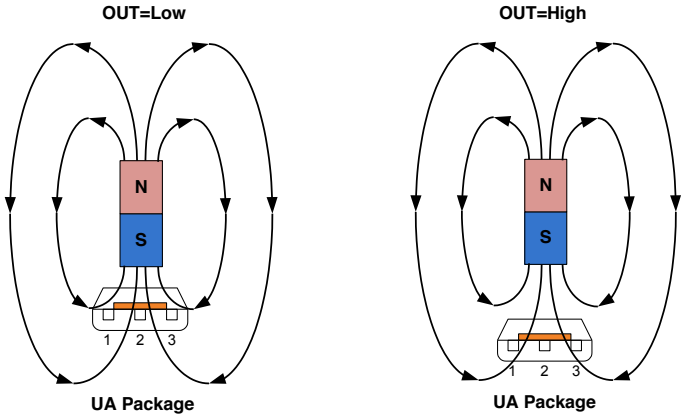

SOT23-3 Package

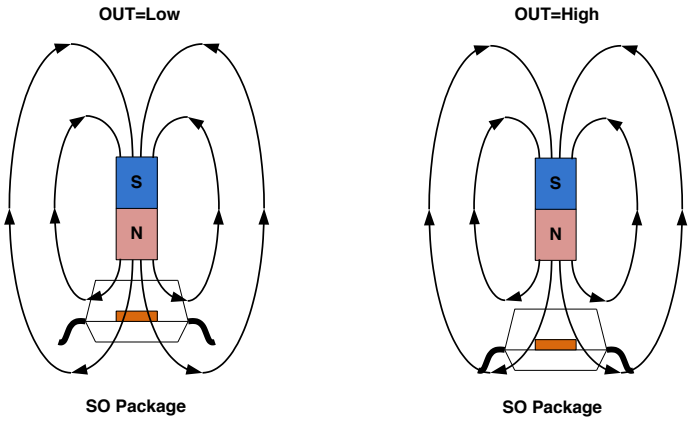

SOT23 Package

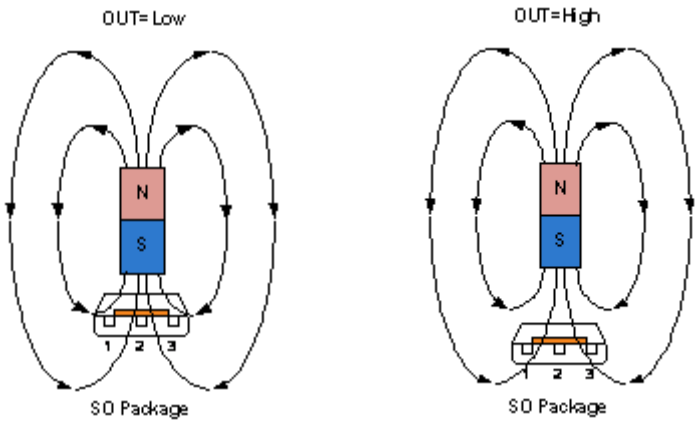

If the device is powered on with a magnetic field strength between B_{RP} and B_{OP}, then the device output is determinate High. For UA package, if the field strength is greater than B_{OP}, then the output is pulled low. If the field strength is less than B_{RP}, the output is released. For SO package, however, if the field strength is less than B_{OP}, then the output is pulled low. If the field strength is greater than B_{RP}, the output is released.

Characteristic Data

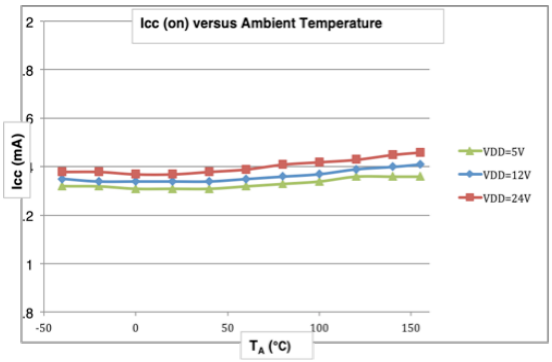

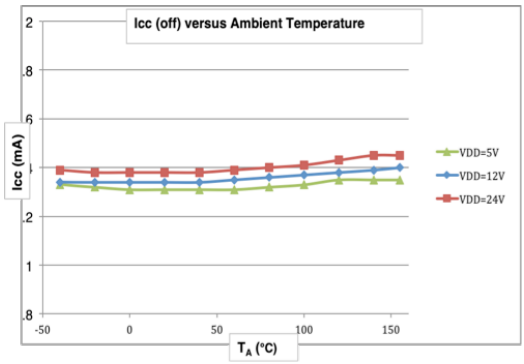

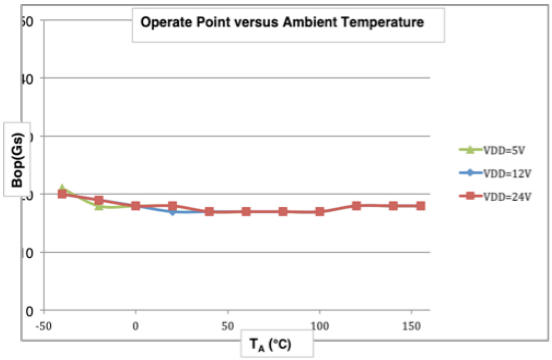

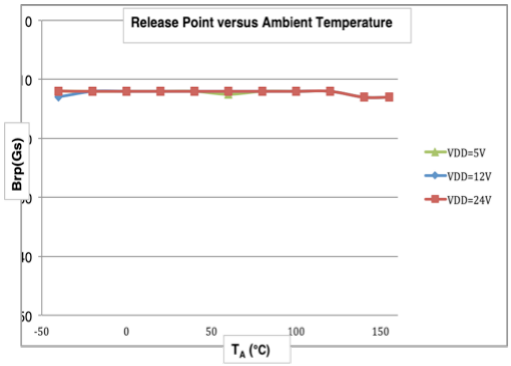

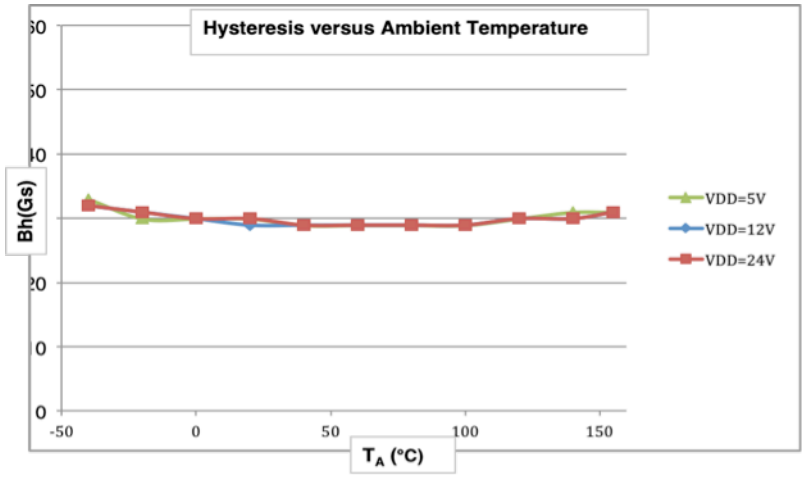

Marking Information

(1) SIP3-3L

(Top View)

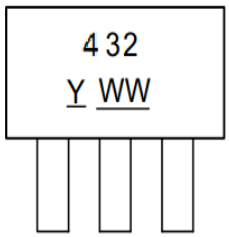

Y : Year : "5" = 2015

WW : Nth Week 01~52

(2) SOT23

(Top View)

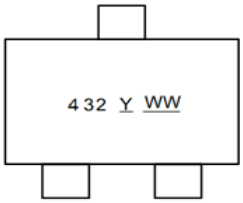

Y : Year 0~9
M : Month A~L

Package Information (All Dimensions in mm)

Package Designator (TO-92S)

3-Terminal
UA Package

Dimension:mm

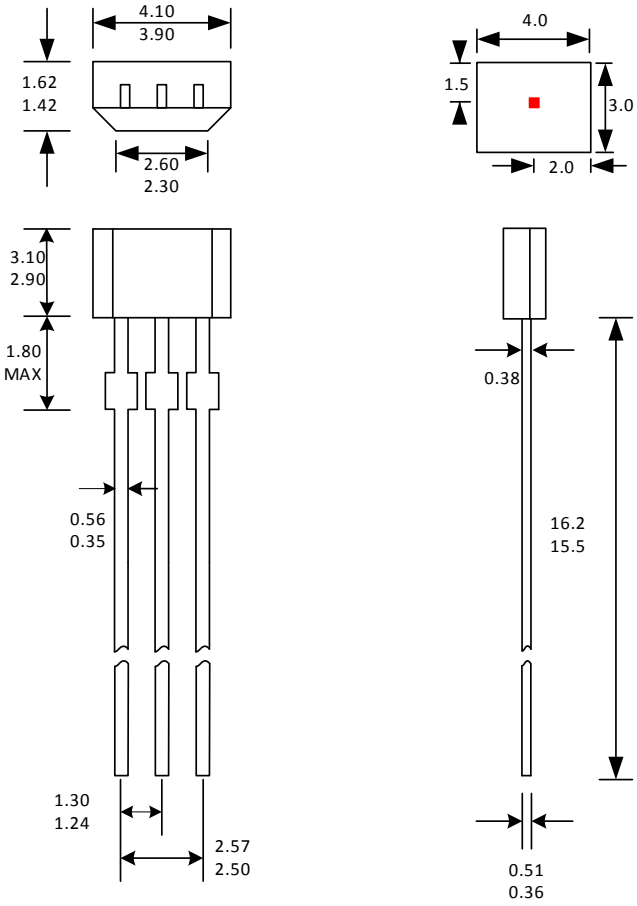

Notes:
1. Exact body and lead configuration at vendor's option within limits shown.
2. Height does not include mold gate flash.

Where no tolerance is specified, dimension is nominal.

Package Designator (SOT23-3)

3-Terminal
SO Package

Dimension:mm

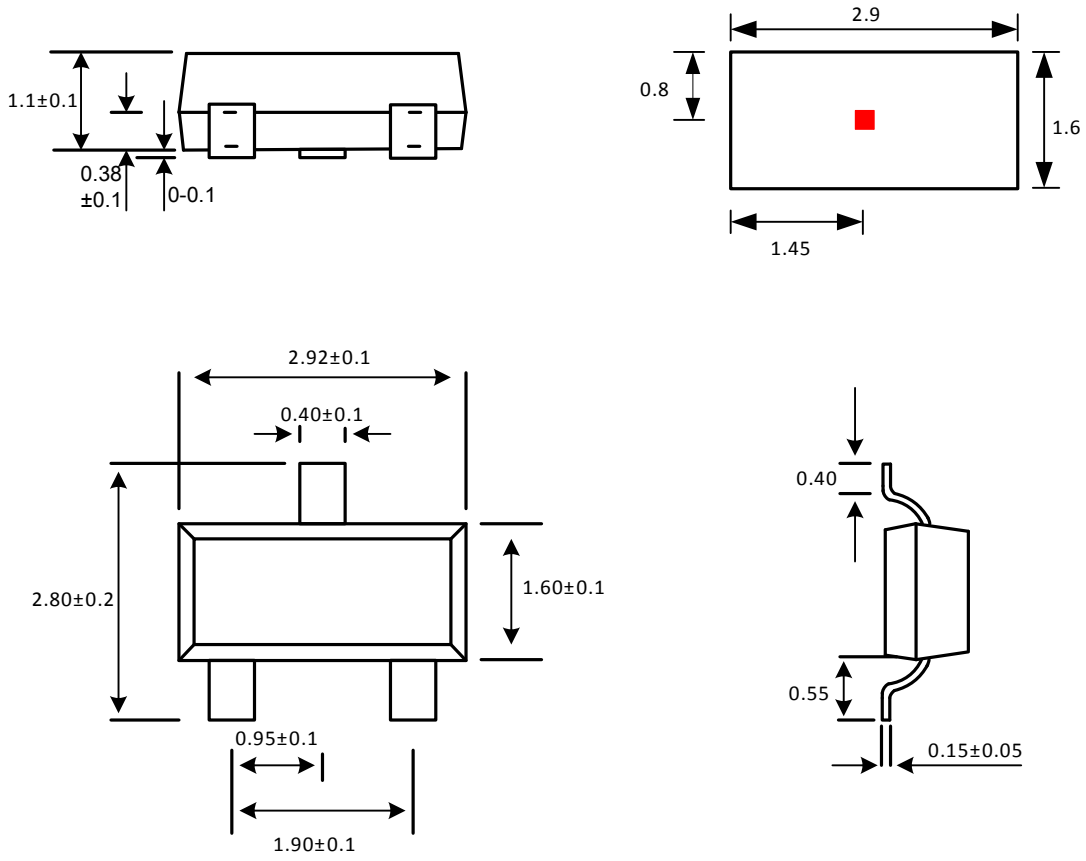

Notes:

1. Exact body and lead configuration at vendor's option within limits shown.
2. Height does not include mold gate flash.

Where no tolerance is specified, dimension is nominal.

Package Designator (SOT23)

3-Terminal
SO Package

Dimension:mm

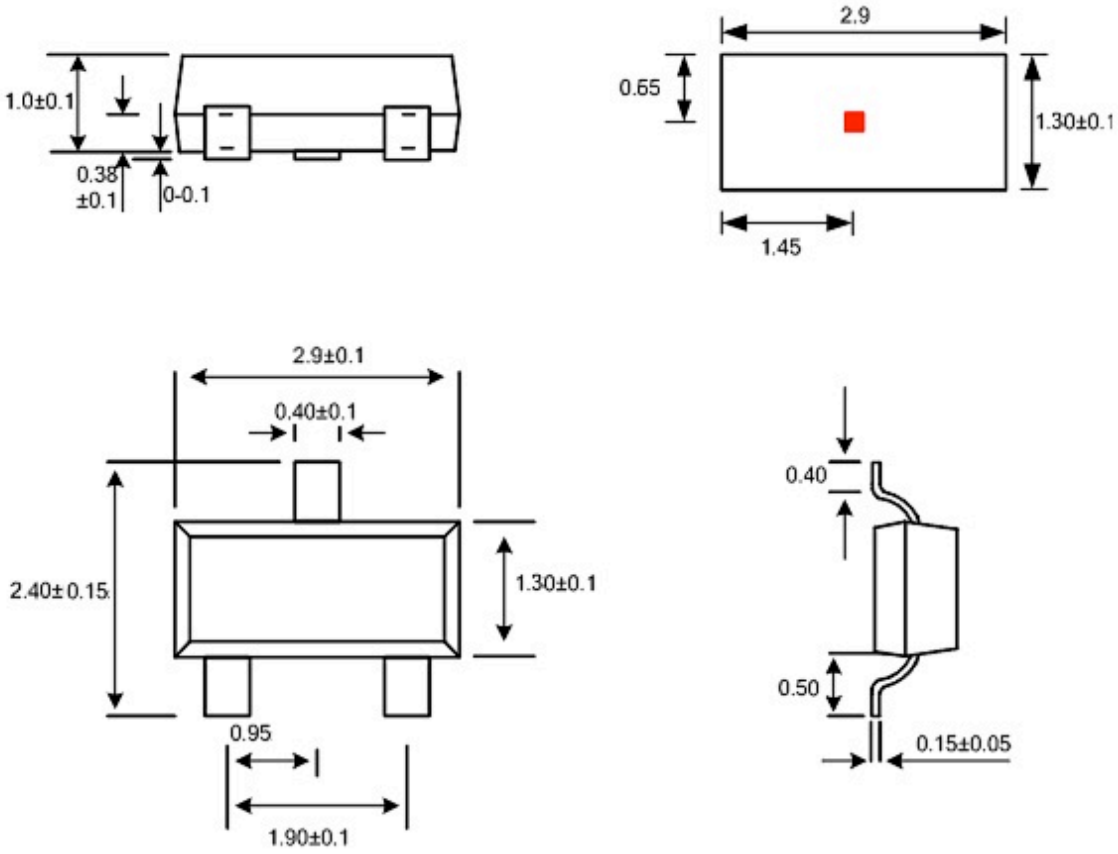

Notes:
1. Exact body and lead configuration at vendor's option within limits shown.
2. Height does not include mold gate flash.

Where no tolerance is specified, dimension is nominal.