TECH PUBLIC
台舟电子

NTF3055L108T1G

N-Channel Enhancement Mode Power MOSFET

www.sot23.com.tw

GENERAL FEATURES

- 60V, 4A, $R_{DS(ON)}$ = 85mΩ @V_{GS} = 10V.
  $R_{DS(ON)}$ = 100mΩ @V_{GS} = 4.5V.
- High dense cell design for extremely low $R_{DS(ON)}$.
- Rugged and reliable.
- Lead free product is acquired.
- SOT-223 package.

Application

- Load/Power Switching
- Interfacing Switching
- Logic Level Shift

Package and Pin Configuration

SOT223

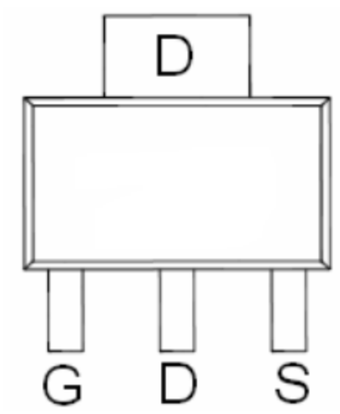

Marking:

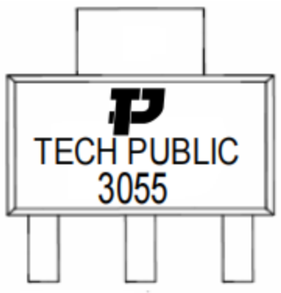

Circuit diagram

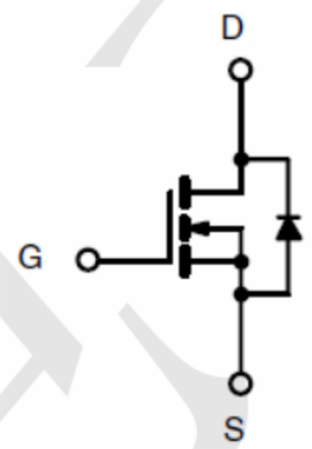

ABSOLUTE MAXIMUM RATINGS T_A = 25°C unless otherwise noted

Parameter	Symbol	Limit	Units
Drain-Source Voltage	V_{DS}	60	V
Gate-Source Voltage	V_{GS}	±20	V
Drain Current-Continuous	I_D	4	A
Drain Current-Pulsed [a]	I_{DM}	20	A
Maximum Power Dissipation	P_D	3	W
Operating and Store Temperature Range	T_J,T_{stg}	-55 to 150	°C

Thermal Characteristics

Parameter	Symbol	Limit	Units
Thermal Resistance, Junction-to-Ambient [b]	$R_{\theta JA}$	42	°C/W

Electrical Characteristics T_A = 25℃ unless otherwise noted

Parameter	Symbol	Test Condition	Min	Typ	Max	Units
Off Characteristics						
Drain-Source Breakdown Voltage	BV_{DSS}	V_{GS} = 0V, I_D = 250μA	60			V
Zero Gate Voltage Drain Current	I_{DSS}	V_{DS} = 60V, V_{GS} = 0V			1	μA
Gate Body Leakage Current, Forward	I_{GSSF}	V_{GS} = 20V, V_{DS} = 0V			100	nA
Gate Body Leakage Current, Reverse	I_{GSSR}	V_{GS} = -20V, V_{DS} = 0V			-100	nA
On Characteristics						
Gate Threshold Voltage	$V_{GS(th)}$	V_{GS} = V_{DS}, I_D = 250μA	1		3	V
Static Drain-Source On-Resistance	$R_{DS(on)}$	V_{GS} = 10V, I_D = 2A			85	mΩ
		V_{GS} = 4.5V, I_D = 1.5A			100	mΩ
Dynamic Characteristics [d]						
Input Capacitance	C_{iss}	V_{DS} = 25V, V_{GS} = 0V, f = 1.0 MHz		530		pF
Output Capacitance	C_{oss}			70		pF
Reverse Transfer Capacitance	C_{rss}			50		pF
Switching Characteristics [d]						
Turn-On Delay Time	$t_{d(on)}$	V_{DD} = 30V, I_D = 1A, V_{GS} = 10V, R_{GEN} = 6Ω		9	18	ns
Turn-On Rise Time	t_r			4	8	ns
Turn-Off Delay Time	$t_{d(off)}$			28	56	ns
Turn-Off Fall Time	t_f			3	6	ns
Total Gate Charge	Q_g	V_{DS} = 30V, I_D = 4.5A, V_{GS} = 10V		13	17	nC
Gate-Source Charge	Q_{gs}			1		nC
Gate-Drain Charge	Q_{gd}			4		nC
Drain-Source Diode Characteristics and Maximun Ratings						
Drain-Source Diode Forward Current [b]	I_S				2.5	A
Drain-Source Diode Forward Voltage [c]	V_{SD}	V_{GS} = 0V, I_S = 2.5A			1.1	V

Typical Electrical and Thermal Characteristics

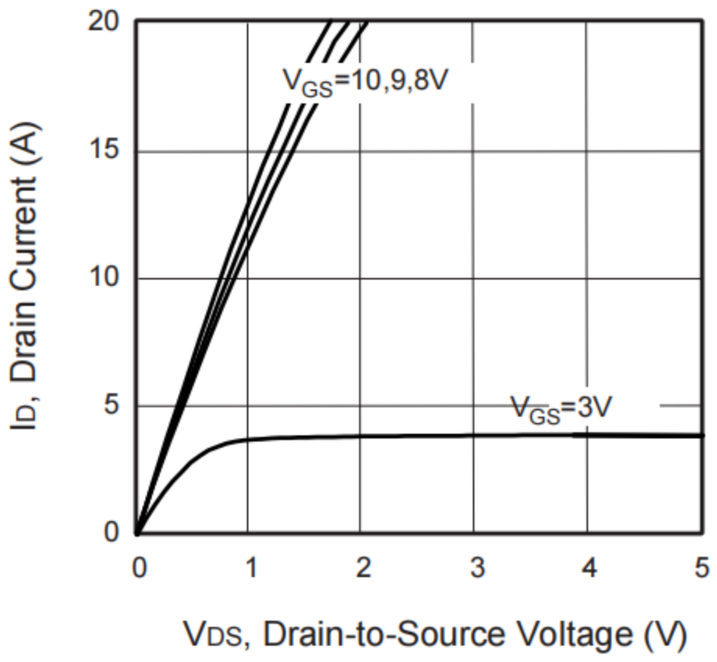

Figure 1. Output Characteristics

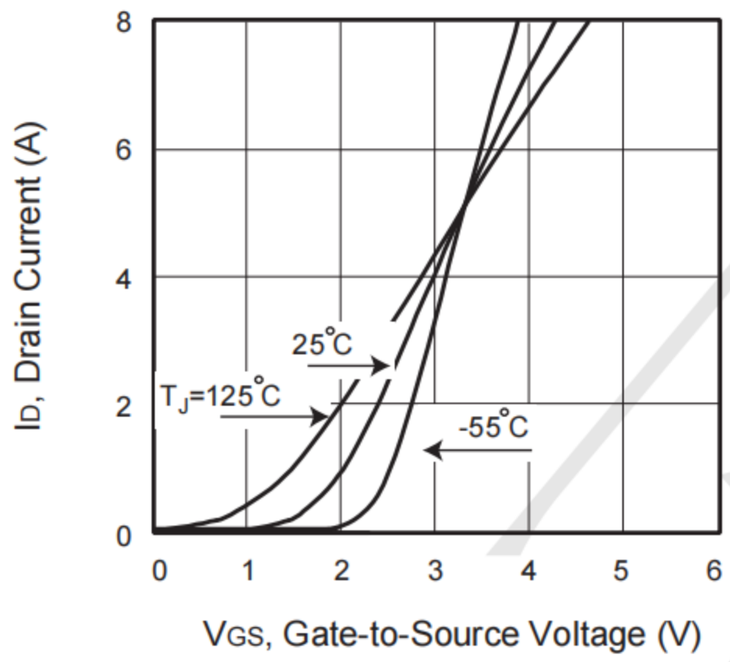

Figure 2. Transfer Characteristics

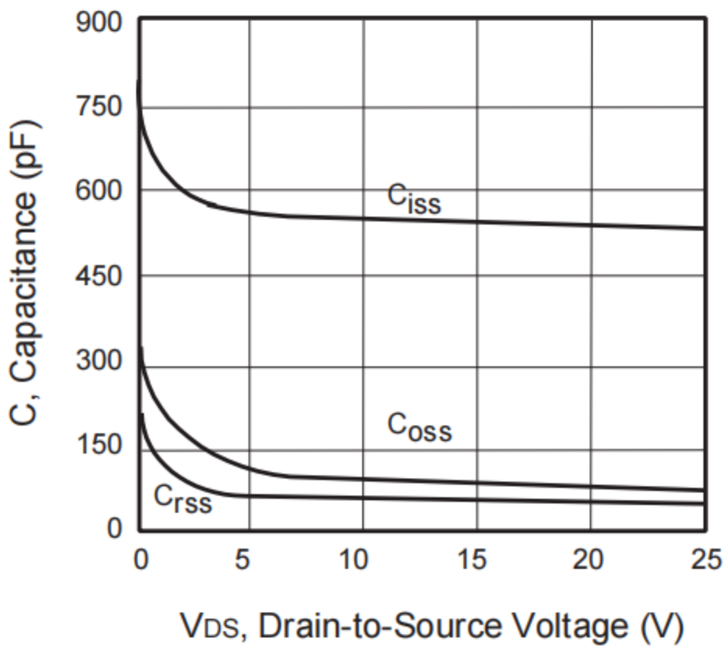

Figure 3. Capacitance

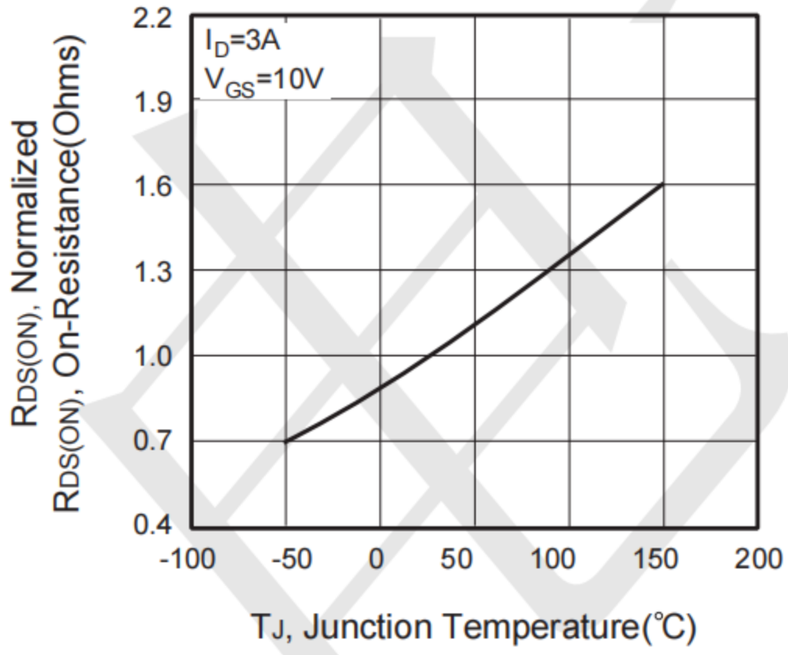

Figure 4. On-Resistance Variation with Temperature

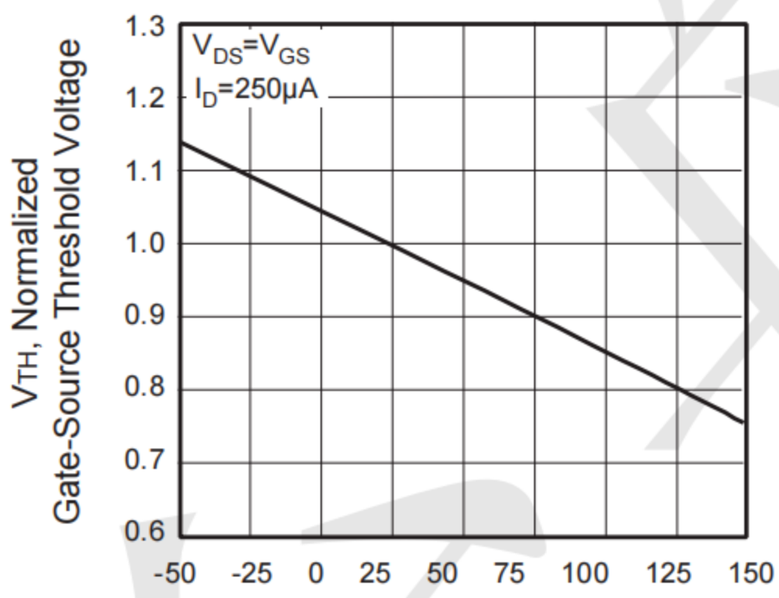

Figure 5. Gate Threshold Variation with Temperature

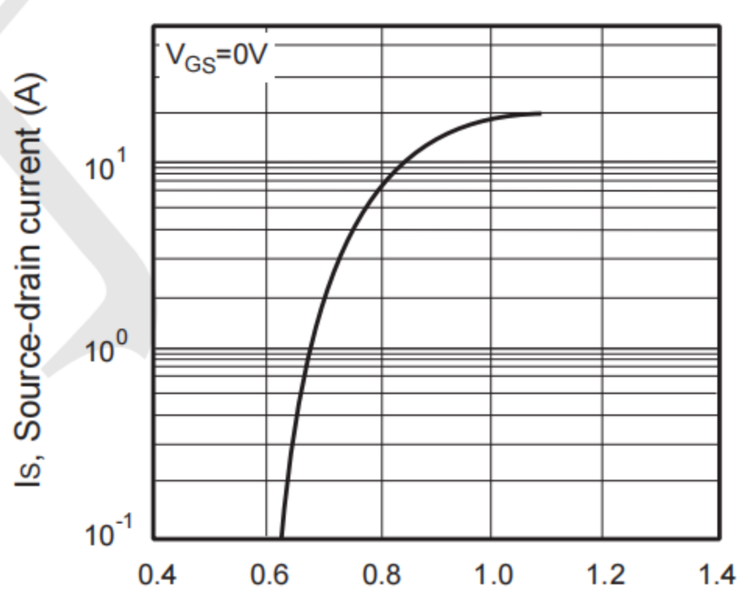

Figure 6. Body Diode Forward Voltage Variation with Source Current

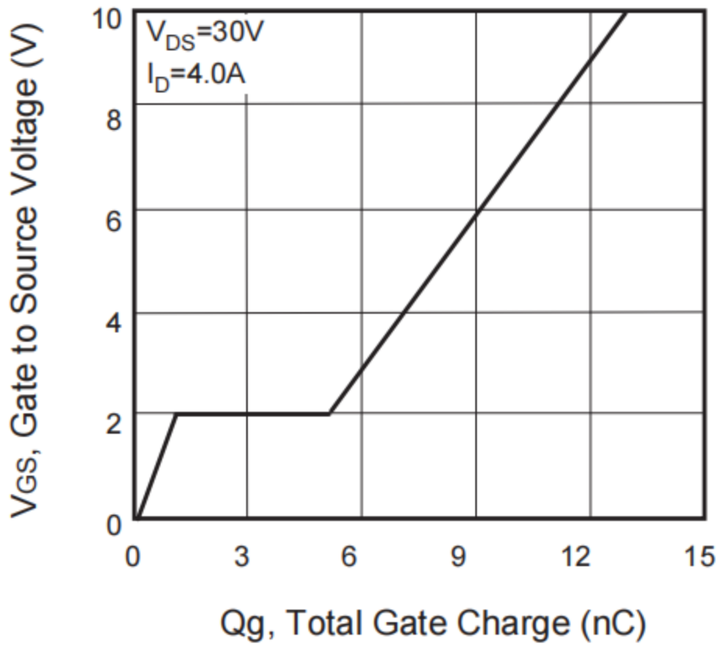

Figure 7. Gate Charge

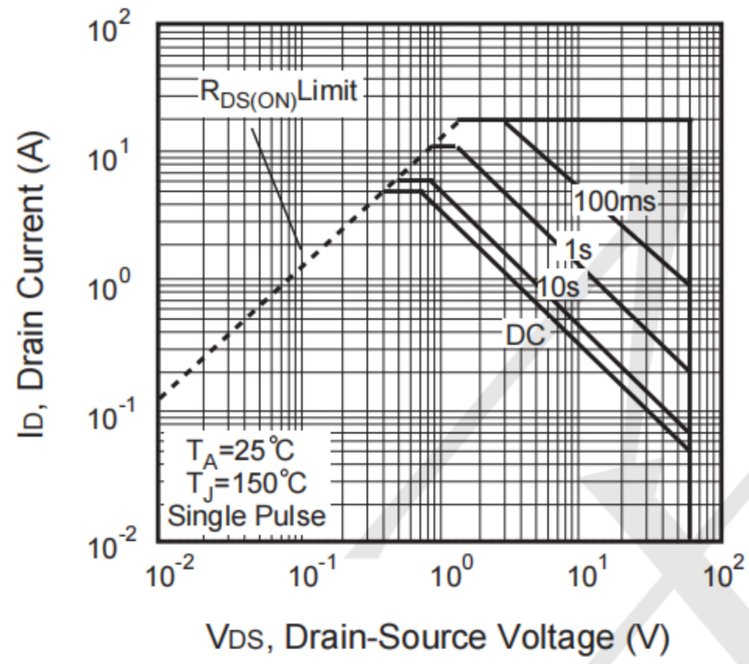

Figure 8. Maximum Safe Operating Area

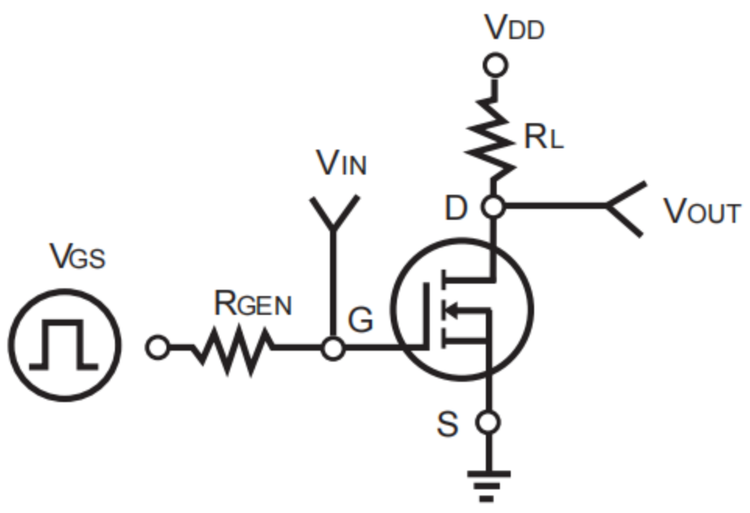

Figure 9. Switching Test Circuit

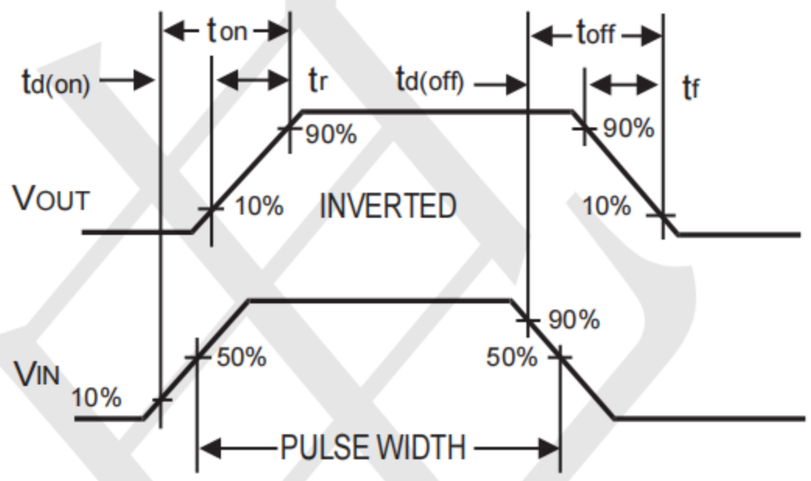

Figure 10. Switching Waveforms

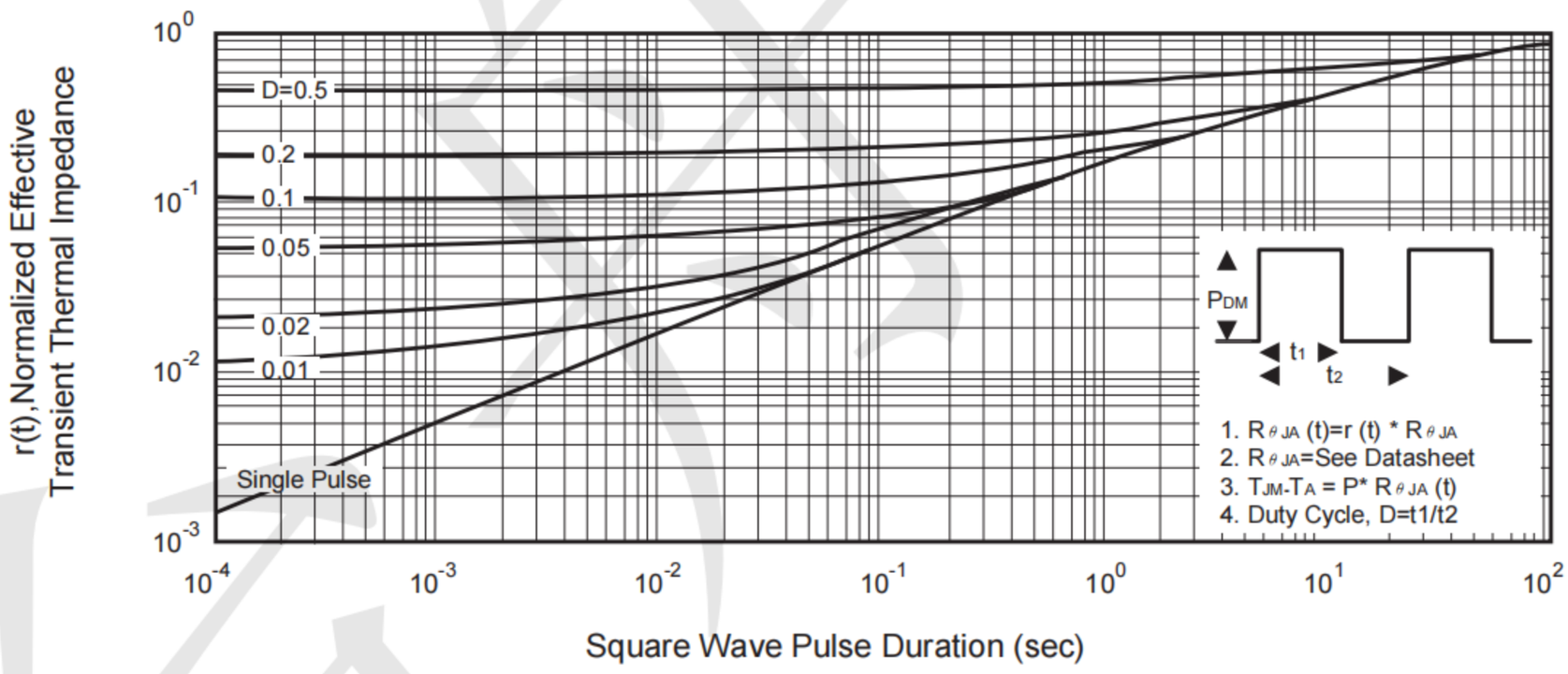

Figure 11. Normalized Thermal Transient Impedance Curve

SOT-223 Package Information

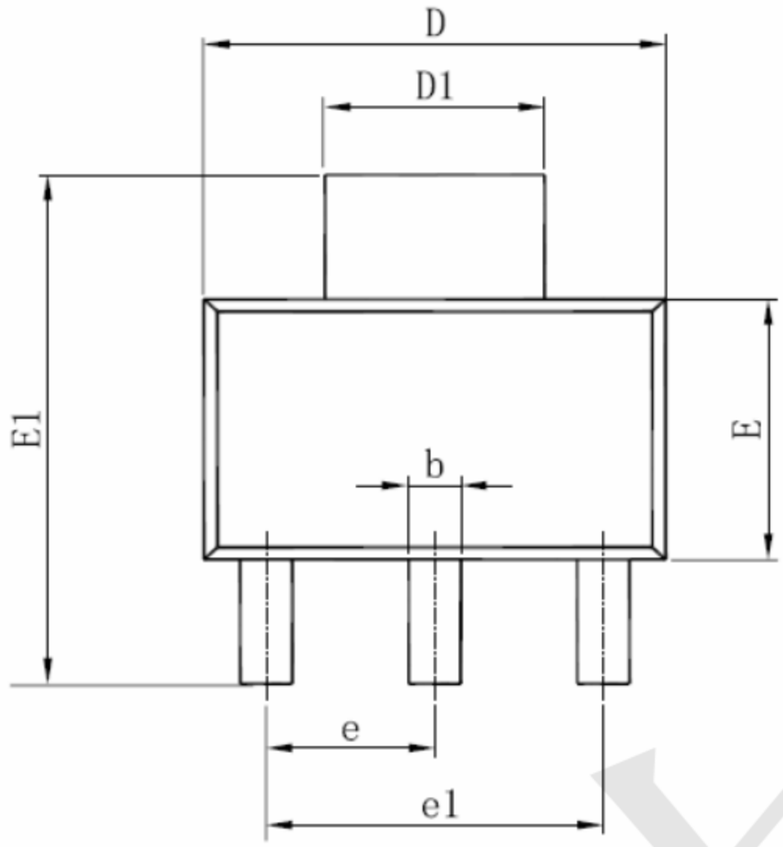

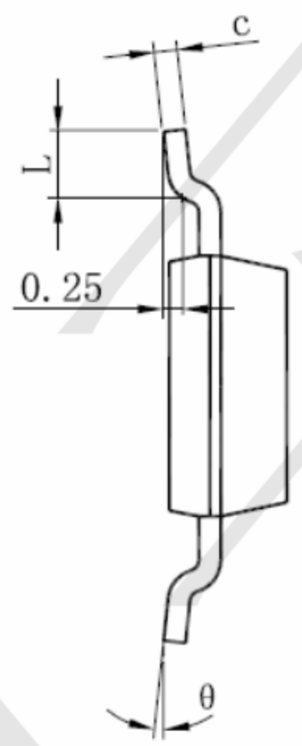



Symbol	Dimensions In Millimeters		Dimensions In Inches	
	Min	Max	Min	Max
A	1.520	1.800	0.060	0.071
A1	0.000	0.100	0.000	0.004
A2	1.500	1.700	0.059	0.067
b	0.660	0.820	0.026	0.032
c	0.250	0.350	0.010	0.014
D	6.200	6.400	0.244	0.252
D1	2.900	3.100	0.114	0.122
E	3.300	3.700	0.130	0.146
E1	6.830	7.070	0.269	0.278
e	2.300(BSC)		0.091(BSC)	
e1	4.500	4.700	0.177	0.185
L	0.900	1.150	0.035	0.045
θ	0°	10°	0°	10°