精密微功耗并联电压基准

查询样品: LM4040-EP

特性

- 固定电压输出 **2.5 V**
- 严格的输出电压允差和低温度系数
  - 最大 **0.65%, 100 ppm/°C**
- 低输出噪音**: 35 μV_{RMS}** 典型值
- 宽工作电流范围**: 45 μA Typ** 至 **15 mA**
- 所有电容负载下均稳定**;** 无需输出电容器

应用范围

- 数据采集系统
- 电源和电源监视器
- 测量仪器和测试设备
- 过程控制
- 高精度音频
- 车用电子器件
- 能耗管理
- 电池供电设备

支持国防、航天和医疗应用

- 受控基线
- 一个组装**/**测试场所
- 一个制造场所
- 可在军用温度范围内 **(–55°C/125°C)**工作(1)
- 产品生命周期有所延长
- 拓展的产品变更通知
- 产品可追溯性

DBZ (SOT-23) PACKAGE
(TOP VIEW)

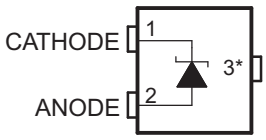

* Pin 3 is attached to substrate and must be connected to ANODE or left open.

(1) 可提供定制温度范围的器件

说明**/**订购信息

LM4040 并联电压基准系列是多用途的，易于使用的基准，能满足广泛应用。 2-引脚固定输出设备工作时无需外部电容器并对所用电容负载都稳定。 除此之外, 此基准提供低动态阻抗、低噪音和低温度系数以保证大范围工作电流和温度下的稳定输出电压。 LM4040 在片子分类过程中使用熔丝和Zener-zap 反向击穿电压微调以提供允许偏差在0.65%的输出电压。

封装在节约空间的SOT-23-3封转内并要求 45 μA (典型值)最小电流, LM4040 同样也是便携式应用的最佳选择。 LM4040C25 工作环境温度范围为 –55°C 至 125°C。

ORDERING INFORMATION(1)

T_A	DEVICE GRADE	V_{KA}	PACKAGE		ORDERABLE PART NUMBER	TOP-SIDE MARKING(2)
–55°C to 125°C	0.65% initial accuracy and 100 ppm/°C temperature coefficient	2.5 V	SOT-23-3 (DBZ)	Reel of 250	LM4040C25MDBZTEP	SAGU

(1) For the most current package and ordering information, see the Package Option Addendum at the end of this document, or see the TI web site at www.ti.com.
(2) The actual top-side marking has one additional character that designates the wafer fab/assembly site.

Please be aware that an important notice concerning availability, standard warranty, and use in critical applications of Texas Instruments semiconductor products and disclaimers thereto appears at the end of this data sheet.

PRODUCTION DATA information is current as of publication date. Products conform to specifications per the terms of the Texas Instruments standard warranty. Production processing does not necessarily include testing of all parameters.

Copyright © 2011, Texas Instruments Incorporated

FUNCTIONAL BLOCK DIAGRAM

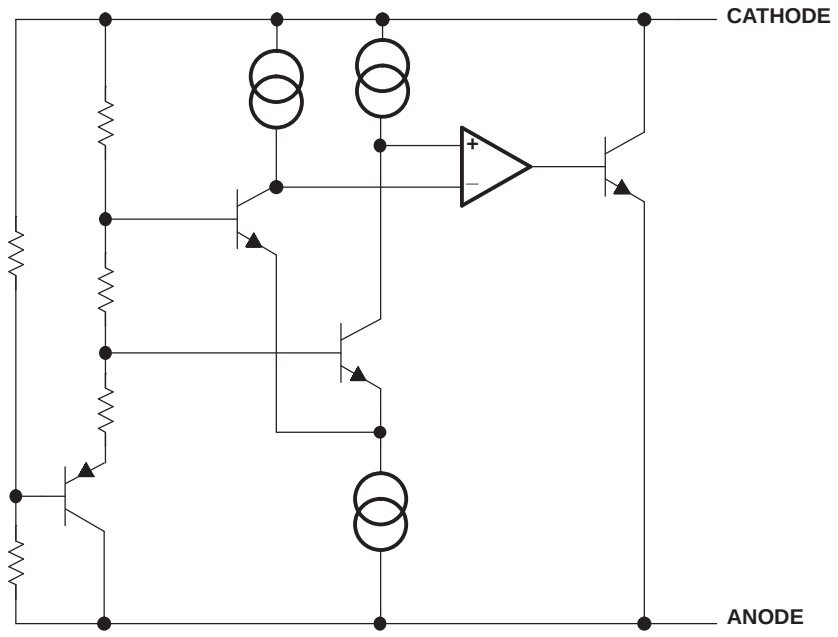

Absolute Maximum Ratings(1)

over free-air temperature range (unless otherwise noted)

		MIN	MAX	UNIT
I_Z	Continuous cathode current	–10	25	mA
T_J	Operating virtual junction temperature		150	°C
T_{stg}	Storage temperature range	–65	150	°C

(1) Stresses beyond those listed under "absolute maximum ratings" may cause permanent damage to the device. These are stress ratings only, and functional operation of the device at these or any other conditions beyond those indicated under "recommended operating conditions" is not implied. Exposure to absolute-maximum-rated conditions for extended periods may affect device reliability.

THERMAL INFORMATION

THERMAL METRIC(1)		LM4040 DBZ 3 PINS	UNITS
θ_{JA}	Junction-to-ambient thermal resistance(2)	320.8	°C/W
θ_{JC}	Junction-to-case thermal resistance	98.2	
θ_{JB}	Junction-to-board thermal resistance(3)	53.3	
ψ_{JT}	Junction-to-top characterization parameter(4)	3.3	
ψ_{JB}	Junction-to-board characterization parameter(5)	51.8	

(1) 有关传统和新的热度量的更多信息，请参阅 *IC* 封装热度量 应用报告 SPRA953。
(2) 在 JESD51-2a 描述的环境中，按照 JESD51-7 的指定在一个 JEDEC 标准 high-K 测试电路板上进行仿真，从而获得自然对流条件下的结到外部热阻。
(3) 按照 JESD51-8 中的说明，通过在配有用于控制 PCB 温度的环形冷板夹具的环境中进行仿真，以获得结到电路板热阻。
(4) 结到顶部的表征参数 (ψ_{JT}) 估算真实系统中器件的结温，并使用 JESD51-2a (第 6 章和第 7 章) 中描述的程序从从得到 θ_{JA}的仿真数据中提取出该参数。
(5) 结到电路板的表征参数 (ψ_{JB}) 估算真实系统中器件的结温，并使用 JESD51-2a (第 6 章和第7 章) 中描述的程序从从得到 θ_{JA} 的仿真数据中提取出该参数。

Copyright © 2011, Texas Instruments Incorporated

Recommended Operating Conditions

		MIN	MAX	UNIT
I_Z	Cathode current	See (1)	15	mA
T_A	Free-air temperature	–55	125	°C

(1) See parametric tables

Electrical Characteristics

at extended temperature range, full-range T_A = –55°C to 125°C (unless otherwise noted)

PARAMETER		TEST CONDITIONS	T_A	MIN	TYP	MAX	UNIT
V_Z	Reverse breakdown voltage	I_Z = 100 µA	25°C		2.5		V
ΔV_Z	Reverse breakdown voltage tolerance	I_Z = 100 µA	25°C	–16		16	mV
			Full range	–42		42	
$I_{Z,min}$	Minimum cathode current		25°C		45	75	µA
			Full range			82	
α_{VZ}	Average temperature coefficient of reverse breakdown voltage	I_Z = 10 mA	25°C		±20		ppm/°C
		I_Z = 1 mA	25°C		±15		
			Full range			±100	
		I_Z = 100 µA	25°C		±15		
$\frac{\Delta V_Z}{\Delta I_Z}$	Reverse breakdown voltage change with cathode current change	$I_{Z,min} < I_Z < 1$ mA	25°C		0.3	0.8	mV
			Full range			1.1	
		1 mA < I_Z < 15 mA	25°C		2.5	6	
			Full range			9	
Z_Z	Reverse dynamic impedance	I_Z = 1 mA, f = 120 Hz, I_{AC} = 0.1 I_Z	25°C		0.3		Ω
e_N	Wideband noise	I_Z = 100 µA, 10 Hz ≤ f ≤ 10 kHz	25°C		35		μV_{RMS}
	Long-term stability of reverse breakdown voltage	t = 1000 h, T_A = 25°C ± 0.1°C, I_Z = 100 µA			120		ppm
V_{HYST}	Thermal hysteresis (1)	ΔT_A = –55°C to 125°C			0.08		%

(1) Thermal hysteresis is defined as $V_{Z,25°C}$ (after cycling to –55°C) – $V_{Z,25°C}$ (after cycling to 125°C).

Copyright © 2011, Texas Instruments Incorporated

TYPICAL CHARACTERISTICS

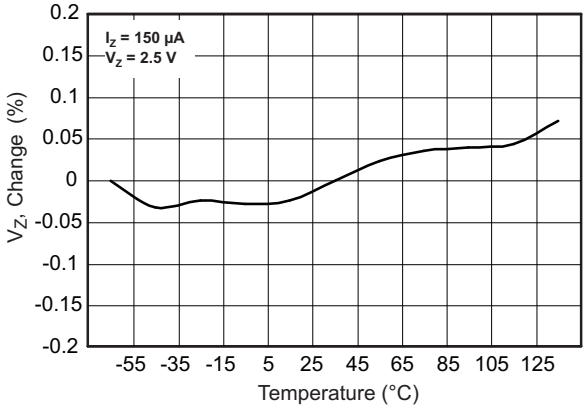

Figure 1. Change in V_Z vs Change in Temperature

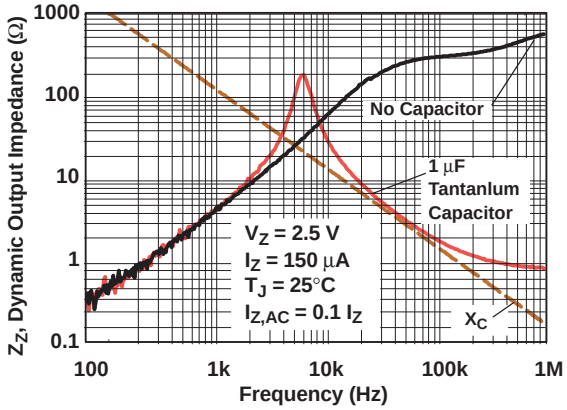

Figure 2. Output Impedance vs Frequency

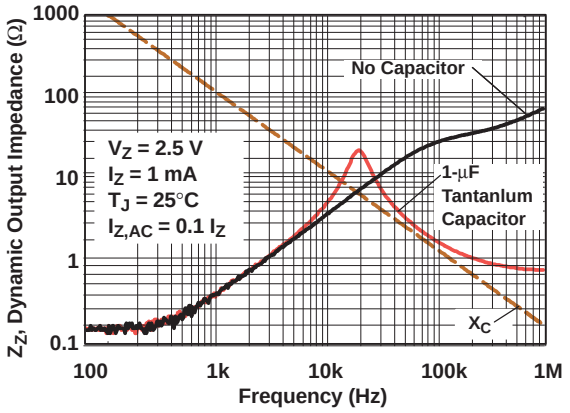

Figure 3. Output Impedance vs Frequency

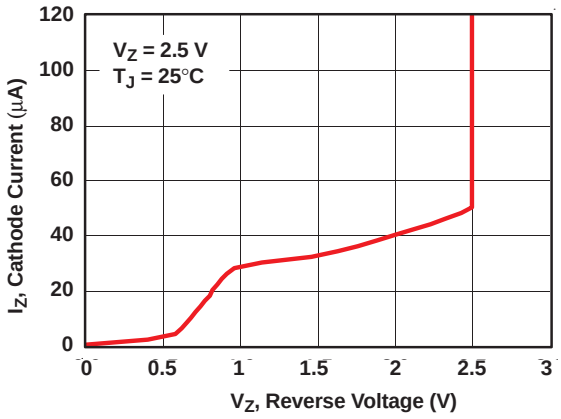

Figure 4. Cathode Current vs Reverse Voltage

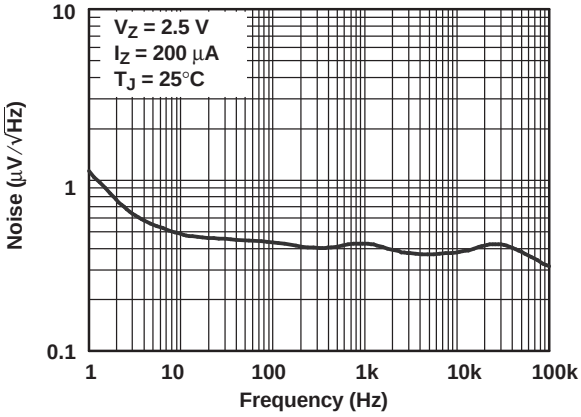

Figure 5. Noise Voltage vs Frequency

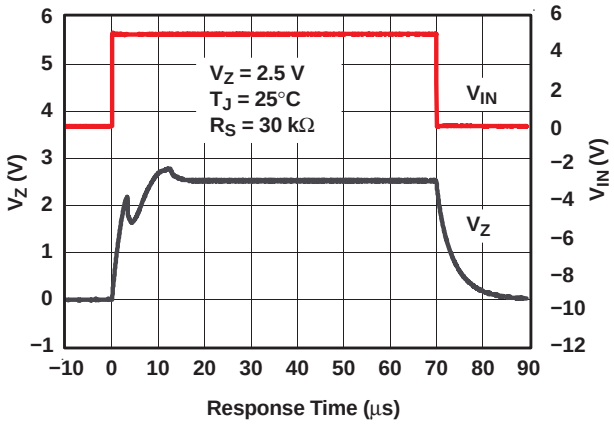

Figure 6. Start-Up Characteristics

Copyright © 2011, Texas Instruments Incorporated

APPLICATION INFORMATION

Start-Up Characteristics

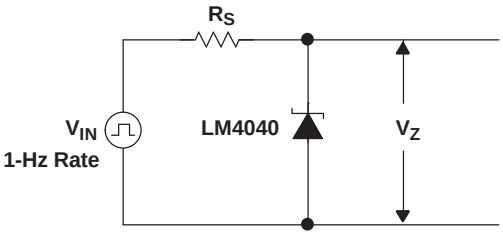

Figure 7. Test Circuit

Output Capacitor

The LM4040 does not require an output capacitor across cathode and anode for stability. However, if an output bypass capacitor is desired, the LM4040 is designed to be stable with all capacitive loads.

SOT-23 Connections

There is a parasitic Schottky diode connected between pins 2 and 3 of the SOT-23 packaged device. Thus, pin 3 of the SOT-23 package must be left floating or connected to pin 2.

Cathode and Load Currents

In a typical shunt-regulator configuration (see Figure 8), an external resistor, R_S, is connected between the supply and the cathode of the LM4040. R_S must be set properly, as it sets the total current available to supply the load (I_L) and bias the LM4040 (I_Z). In all cases, I_Z must stay within a specified range for proper operation of the reference. Taking into consideration one extreme in the variation of the load and supply voltage (maximum I_L and minimum V_S), R_S must be small enough to supply the minimum I_Z required for operation of the regulator, as given by data-sheet parameters. At the other extreme, maximum V_S and minimum I_L, R_S must be large enough to limit I_Z to less than its maximum-rated value of 15 mA.

R_S is calculated according to Equation 1:

$$R_S = \frac{(V_S - V_Z)}{(I_L + I_Z)} \quad (1)$$

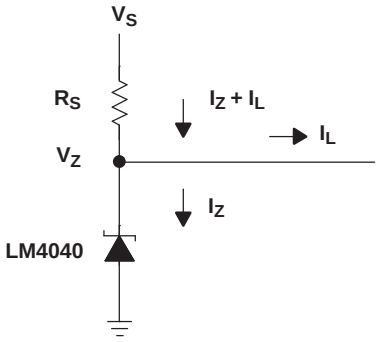

Figure 8. Shunt Regulator

Copyright © 2011, Texas Instruments Incorporated

PACKAGING INFORMATION

Orderable part number	Status (1)	Material type (2)	Package | Pins	Package qty | Carrier	RoHS (3)	Lead finish/ Ball material (4)	MSL rating/ Peak reflow (5)	Op temp (°C)	Part marking (6)
LM4040C25MDBZTEP	NRND	Production	SOT-23 (DBZ) | 3	250 | SMALL T&R	Yes	NIPDAU	Level-1-260C-UNLIM	-55 to 125	SAGU
LM4040C25MDBZTEP.A	NRND	Production	SOT-23 (DBZ) | 3	250 | SMALL T&R	Yes	NIPDAU	Level-1-260C-UNLIM	-55 to 125	SAGU
V62/11615-01XE	NRND	Production	SOT-23 (DBZ) | 3	250 | SMALL T&R	Yes	NIPDAU	Level-1-260C-UNLIM	See LM4040C25MDBZTEP	SAGU

(1) **Status:** For more details on status, see our product life cycle.

(2) **Material type:** When designated, preproduction parts are prototypes/experimental devices, and are not yet approved or released for full production. Testing and final process, including without limitation quality assurance, reliability performance testing, and/or process qualification, may not yet be complete, and this item is subject to further changes or possible discontinuation. If available for ordering, purchases will be subject to an additional waiver at checkout, and are intended for early internal evaluation purposes only. These items are sold without warranties of any kind.

(3) **RoHS values:** Yes, No, RoHS Exempt. See the TI RoHS Statement for additional information and value definition.

(4) **Lead finish/Ball material:** Parts may have multiple material finish options. Finish options are separated by a vertical ruled line. Lead finish/Ball material values may wrap to two lines if the finish value exceeds the maximum column width.

(5) **MSL rating/Peak reflow:** The moisture sensitivity level ratings and peak solder (reflow) temperatures. In the event that a part has multiple moisture sensitivity ratings, only the lowest level per JEDEC standards is shown. Refer to the shipping label for the actual reflow temperature that will be used to mount the part to the printed circuit board.

(6) **Part marking:** There may be an additional marking, which relates to the logo, the lot trace code information, or the environmental category of the part.

Multiple part markings will be inside parentheses. Only one part marking contained in parentheses and separated by a "~" will appear on a part. If a line is indented then it is a continuation of the previous line and the two combined represent the entire part marking for that device.

Important Information and Disclaimer: The information provided on this page represents TI's knowledge and belief as of the date that it is provided. TI bases its knowledge and belief on information provided by third parties, and makes no representation or warranty as to the accuracy of such information. Efforts are underway to better integrate information from third parties. TI has taken and continues to take reasonable steps to provide representative and accurate information but may not have conducted destructive testing or chemical analysis on incoming materials and chemicals. TI and TI suppliers consider certain information to be proprietary, and thus CAS numbers and other limited information may not be available for release.

In no event shall TI's liability arising out of such information exceed the total purchase price of the TI part(s) at issue in this document sold by TI to Customer on an annual basis.

TAPE AND REEL INFORMATION

REEL DIMENSIONS

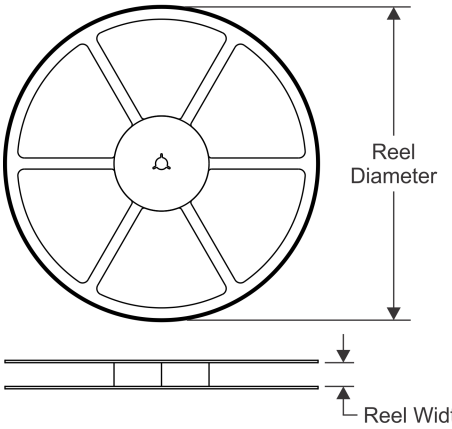

TAPE DIMENSIONS

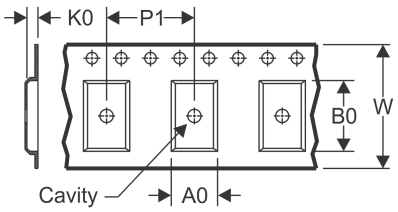

A0	Dimension designed to accommodate the component width
B0	Dimension designed to accommodate the component length
K0	Dimension designed to accommodate the component thickness
W	Overall width of the carrier tape
P1	Pitch between successive cavity centers

QUADRANT ASSIGNMENTS FOR PIN 1 ORIENTATION IN TAPE

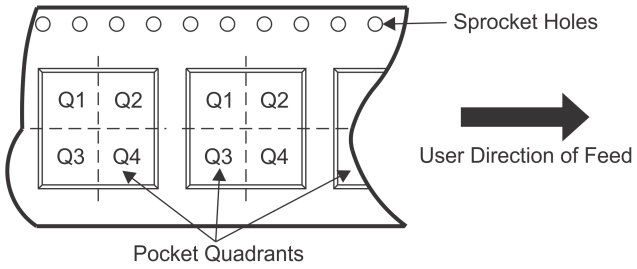

*All dimensions are nominal

Device	Package Type	Package Drawing	Pins	SPQ	Reel Diameter (mm)	Reel Width W1 (mm)	A0 (mm)	B0 (mm)	K0 (mm)	P1 (mm)	W (mm)	Pin1 Quadrant
LM4040C25MDBZTEP	SOT-23	DBZ	3	250	179.0	8.4	3.15	2.95	1.22	4.0	8.0	Q3

TAPE AND REEL BOX DIMENSIONS

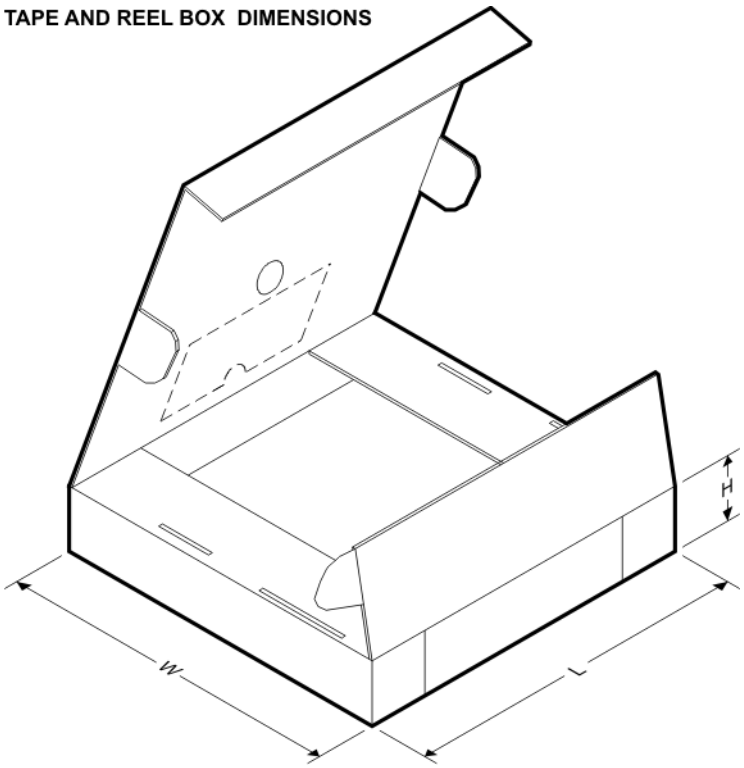

*All dimensions are nominal

Device	Package Type	Package Drawing	Pins	SPQ	Length (mm)	Width (mm)	Height (mm)
LM4040C25MDBZTEP	SOT-23	DBZ	3	250	200.0	183.0	25.0

PACKAGE OUTLINE

DBZ0003A



SOT-23 - 1.12 mm max height

SMALL OUTLINE TRANSISTOR

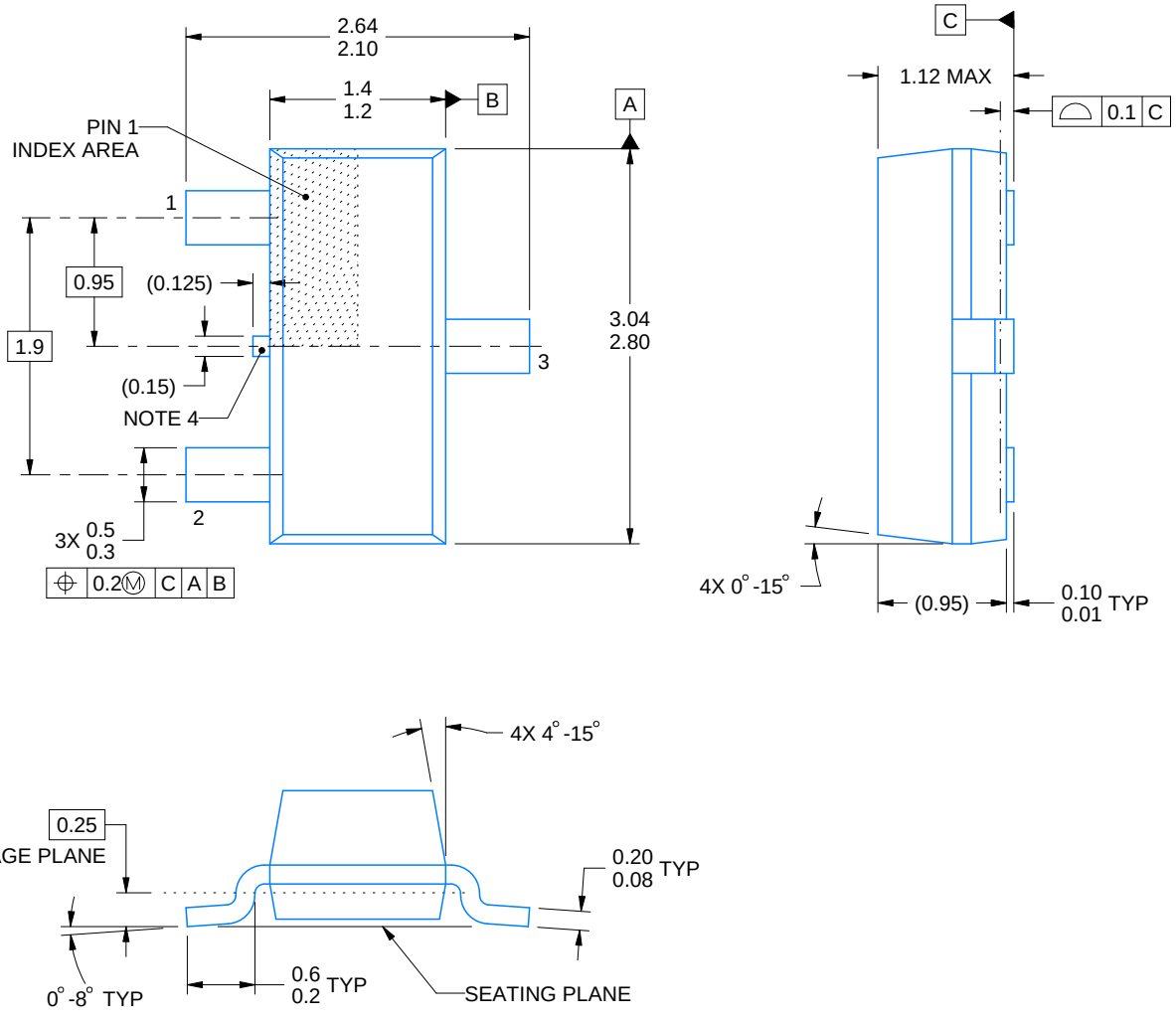

4214838/F 08/2024

NOTES:

1. All linear dimensions are in millimeters. Any dimensions in parenthesis are for reference only. Dimensioning and tolerancing per ASME Y14.5M.
2. This drawing is subject to change without notice.
3. Reference JEDEC registration TO-236, except minimum foot length.
4. Support pin may differ or may not be present.
5. Body dimensions do not include mold flash, protrusions, or gate burrs. Mold flash, protrusions, or gate burrs shall not exceed 0.25mm per side

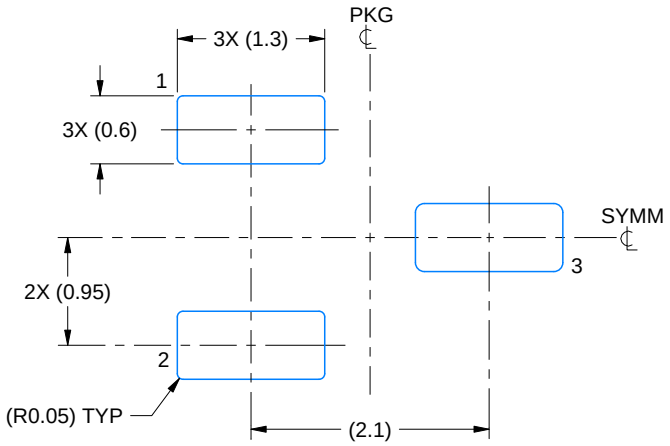

LAND PATTERN EXAMPLE
SCALE:15X

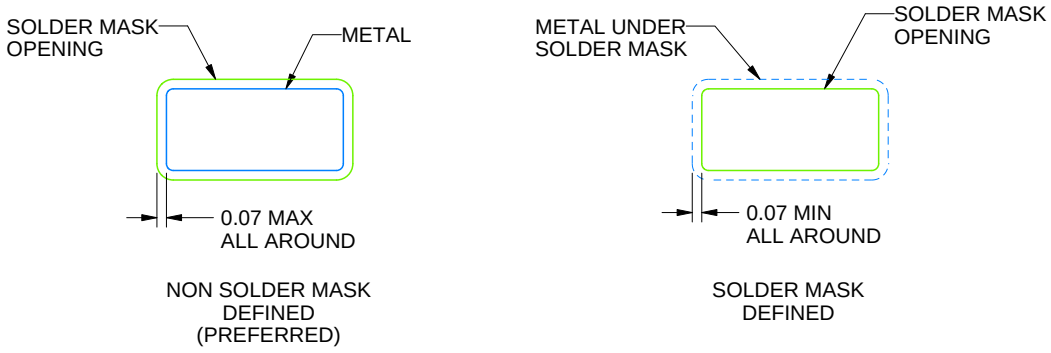

SOLDER MASK DETAILS

4214838/F 08/2024

NOTES: (continued)

5. Publication IPC-7351 may have alternate designs.
6. Solder mask tolerances between and around signal pads can vary based on board fabrication site.

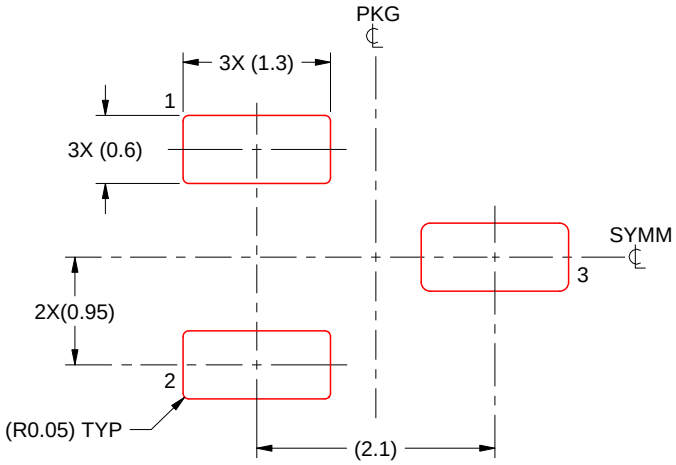

SOLDER PASTE EXAMPLE
BASED ON 0.125 THICK STENCIL
SCALE:15X

4214838/F 08/2024

NOTES: (continued)

7. Laser cutting apertures with trapezoidal walls and rounded corners may offer better paste release. IPC-7525 may have alternate design recommendations.
8. Board assembly site may have different recommendations for stencil design.

重要通知和免责声明

TI“按原样”提供技术和可靠性数据（包括数据表）、设计资源（包括参考设计）、应用或其他设计建议、网络工具、安全信息和其他资源，不保证没有瑕疵且不做出任何明示或暗示的担保，包括但不限于对适销性、与某特定用途的适用性或不侵犯任何第三方知识产权的暗示担保。

这些资源可供使用 TI 产品进行设计的熟练开发人员使用。您将自行承担以下全部责任：(1) 针对您的应用选择合适的 TI 产品，(2) 设计、验证并测试您的应用，(3) 确保您的应用满足相应标准以及任何其他安全、安保法规或其他要求。

这些资源如有变更，恕不另行通知。TI 授权您仅可将这些资源用于研发本资源所述的 TI 产品的相关应用。严禁以其他方式对这些资源进行复制或展示。您无权使用任何其他 TI 知识产权或任何第三方知识产权。对于因您对这些资源的使用而对 TI 及其代表造成的任何索赔、损害、成本、损失和债务，您将全额赔偿，TI 对此概不负责。

TI 提供的产品受 TI 销售条款)、TI 通用质量指南 或 ti.com 上其他适用条款或 TI 产品随附的其他适用条款的约束。TI 提供这些资源并不会扩展或以其他方式更改 TI 针对 TI 产品发布的适用的担保或担保免责声明。 除非德州仪器 (TI) 明确将某产品指定为定制产品或客户特定产品，否则其产品均为按确定价格收入目录的标准通用器件。

TI 反对并拒绝您可能提出的任何其他或不同的条款。

版权所有 © 2026，德州仪器 (TI) 公司

最后更新日期：2025 年 10 月