

12 CIRCUIT SMT USCAR HEADER
POLARIZATION OPTION A

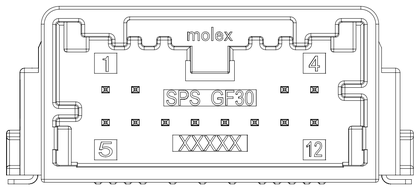

12 CIRCUIT SMT USCAR HEADER
POLARIZATION OPTION B

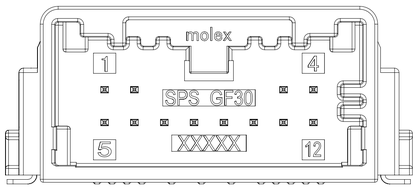

12 CIRCUIT SMT USCAR HEADER
POLARIZATION OPTION C

NOTES: VALID UNLESS OTHERWISE SPECIFIED

1. GENERAL:
   a. APPLICATION SPECIFICATION SEE: AS-34791-020
   b. PRODUCT SPECIFICATION SEE: PS-34791-020
   c. PACKAGING SPECIFICATION PER MOLEX DRAWING: SEE CHART
   d. SOLDERABILITY PER SMES-152
   e. PARTS MUST BE IN COMPLIANCE TO MOLEX CHEMICAL SUBSTANCES FOR PRODUCTS AND PACKAGING SPECIFICATION: QEHS-699000-300
   f. DATA MUST BE SUBMITTED UNDER THE MOLEX PART NUMBER TO IMDS (COMPANY ID#13255)
   g. FLAMMABILITY REQUIREMENT: PER ISO3795 OR GM3191
   h. VISUAL DEFECTS SHALL MEET COSMETIC STANDARD PS-45499-002 (Class B)

2. DESIGN - MATERIALS:
   a. SHROUD (PLASTIC HOUSING): SPS 30% GF, 25% REGRIND MAX PER WEIGHT
   b. BLADES:
      BASE METAL: C26000 BRASS
      PLATING REQUIREMENTS:
      TIN:
      UNDERPLATING:
      OVERALL NICKEL:
      OVERPLATING:
      OVERALL TIN:

W12

24CKT POLARIZATION OPTIONS SHOWN BELOW ARE REPRESENTATIVE FOR 16 AND 20CKT

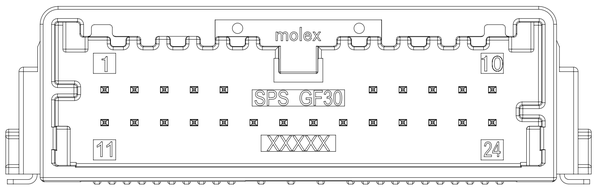

24 CIRCUIT SMT HEADER
POLARIZATION OPTION A

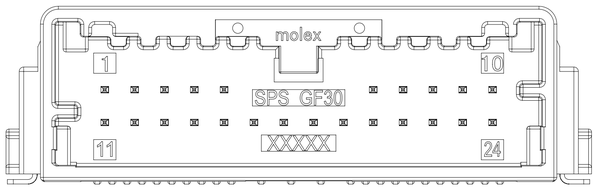

24 CIRCUIT SMT HEADER
POLARIZATION OPTION B

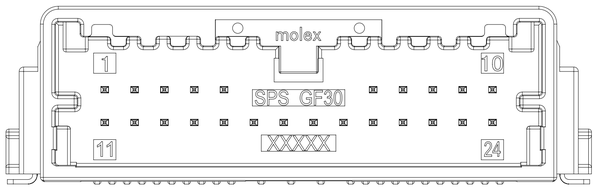

24 CIRCUIT SMT HEADER
POLARIZATION OPTION C

3. DESIGN - GEOMETRY:
   a. THIS IS A 100% CAD GENERATED PART. THE CAD MATHEMATICAL DATA IS THE MASTER FOR THIS PART. FOR DIMENSIONAL OR ANY INFORMATION NOT SHOWN ON THIS DRAWING, ANALYZE THE CAD MODEL.
   b. GEOMETRIC DIMENSIONS AND TOLERANCES PER ASME Y14.5M - 2009
   c. GENERAL TOLERANCES: SEE TITLE BLOCK
   d. EDGES AND UNDIMENSIONED DETAILS PER ISO13715
   e. CORNERS SHOWN AS SHARP TO BE R 0.1 MAX
   f. LETTERING SHALL BE BELOW SURROUNDING SURFACE OF PART. THIS INCLUDES RECYCLING CODE, PLANT AND CAVITY ID, VENDOR ID, AND CIRCUIT ID.
   g. INTERFACE - USCAR
      050-U-012-2-ZXX
      050-U-016-2-ZXX
      050-U-020-2-ZXX
      050-U-024-2-ZXX

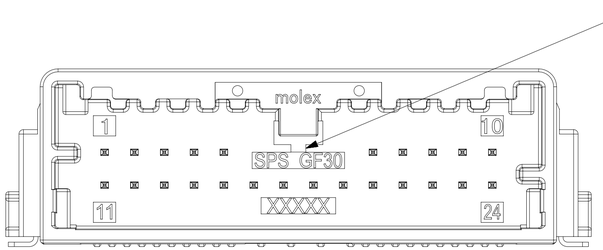

REV	DESCRIPTION
W12	SHEET 5: REMOVED THE DETAIL PLATING INFORMATION FROM THE SD-DRAWING
W11	SHEET 5: REMOVED AVAILABILITY AND MATING COLUMNS ON BOM SHEET 5: ADDED MATING COMPONENT NOTE
W10	SHEET 2: ADDED BALLOONS 14A, 14B
W9	SHEET 1: ADDED V0 VIEW SHEET 5: REORGANIZED BOM TABLE
W8	DRAWING REMASTERED SHEET 1: UPDATED NOTE 2b BASE METAL SHEET 1: ADDED NOTE 3g SHEET 2: SOLDERNAIL POCKET DIMS UPDATED SHEET 3: ADDED BALLOONS 13A & 13B SHEET 5: ADDED V0 TIN PART NUMBERS TO BOM
W7	UPDATED INSPECTION LOG, CHANGED DESCRIPTION, ADDED BASIC DIMS TO SHEET 2
W6	DELETED 34897-6164
W5	ADDED DIM BALLOON 15 & 16
W4	ADDED 16CKT GOLD DEPOPULATED POL A P/N
W3	NX REMASTERING

INSPECTION BALLON NUMBER LOG
PER DRAWING REVISION: W12
LAST BALLOON USED: 16
ADDED BALLOON NUMBERS: 1A, 4A, 7A, 10A
REMOVED BALLOON NUMBERS:

THIS DRAWING CONTAINS INFORMATION THAT IS PROPRIETARY TO MOLEX ELECTRONIC TECHNOLOGIES, LLC AND SHOULD NOT BE USED WITHOUT WRITTEN PERMISSION

DIMENSION UNITS	SCALE
MM	5:1

GENERAL TOLERANCES (UNLESS SPECIFIED)

ANGULAR TOL	±	1 °
4 PLACES	±	0
3 PLACES	±	0
2 PLACES	±	0.1
1 PLACE	±	0.2
0 PLACES	±	0

DRAFT WHERE APPLICABLE MUST REMAIN WITHIN DIMENSIONS

CURRENT REV DESC: REFER TO REVISION COLUMN

EC NO: CO-000026895
DRWN: Lando Zhang 17-Jun-2025
CHK'D: Leo Li 24-Jun-2025
APPR: wolffw 25-Jun-2025

INITIAL REVISION:
DRWN: RFC_PLMIMP
APPR:

molex

MINI50 12-24CKT SMT HDR SALES DRAWING

PRODUCT CUSTOMER DRAWING

DOCUMENT NUMBER	DOC TYPE	DOC PART	REVISION
SD-34897-001	PSD	000	W12

THIRD ANGLE PROJECTION	DRAWING	SERIES	MATERIAL NUMBER	CUSTOMER	SHEET NUMBER
	D-SIZE	34897		GENERAL MARKET	1 OF 5

DOCUMENT STATUS	Production	RELEASE DATE	25-Jun-2025 19:03:47

12 CKT SMT HEADER

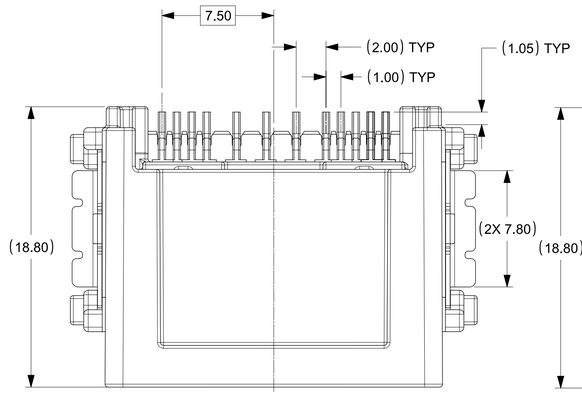

16 CKT SMT HEADER

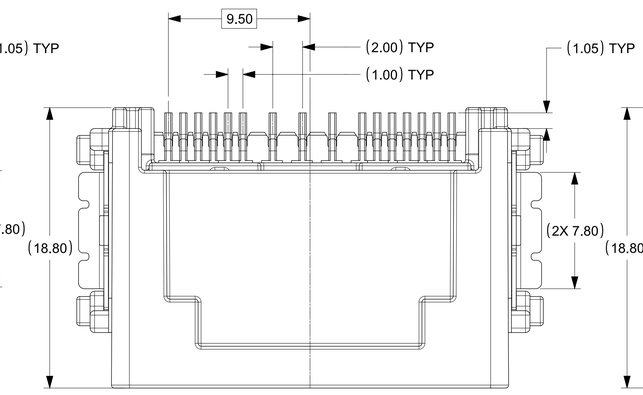

20 CKT SMT HEADER

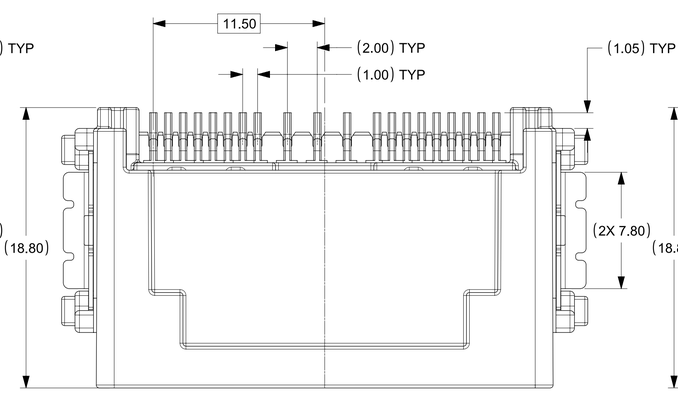

24 CKT SMT HEADER

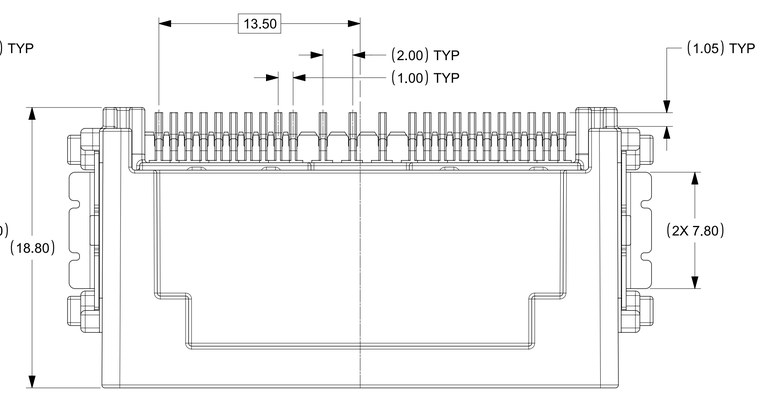

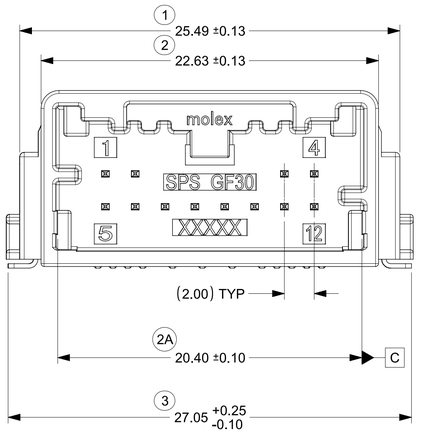

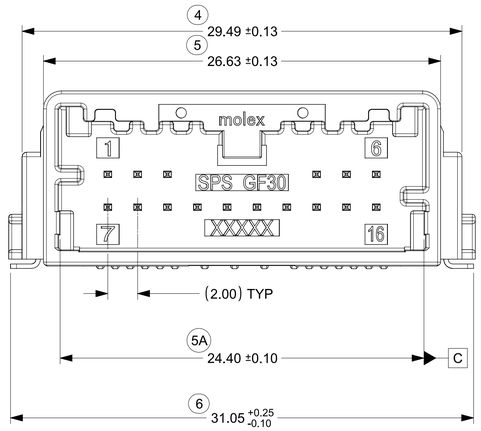

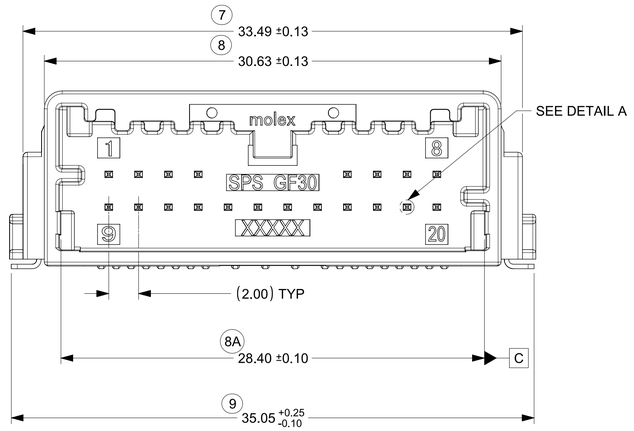

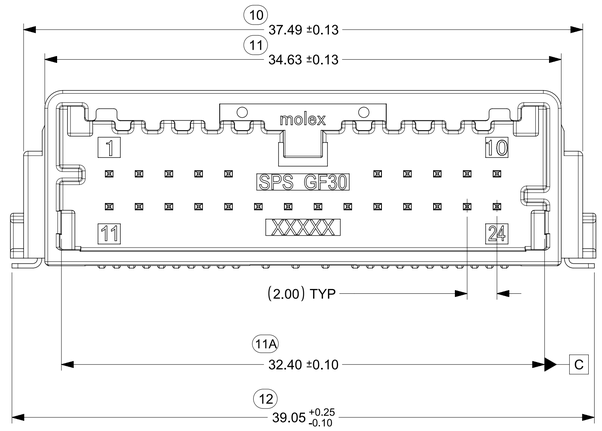

POST-REFLOW MINIMUM LATCH HEIGHT
24 CKT HEADER ASSEMBLY SHOWN AS EXAMPLE

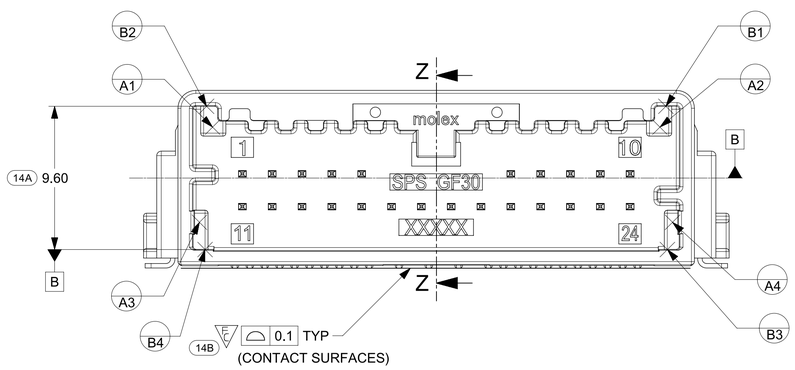

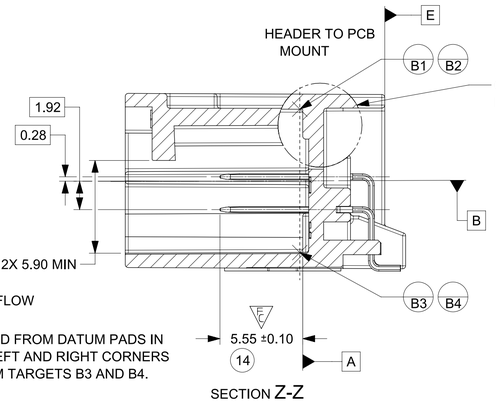

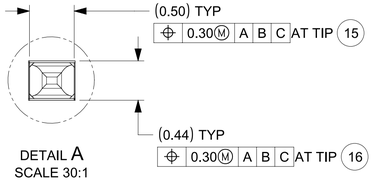

THIS DRAWING CONTAINS INFORMATION THAT IS PROPRIETARY TO MOLEX ELECTRONIC TECHNOLOGIES, LLC AND SHOULD NOT BE USED WITHOUT WRITTEN PERMISSION

DIMENSION UNITS	SCALE
MM	5:1

GENERAL TOLERANCES (UNLESS SPECIFIED)

ANGULAR TOL	±	1 °
4 PLACES	±	0
3 PLACES	±	0
2 PLACES	±	0.1
1 PLACE	±	0.2
0 PLACES	±	0

DRAFT WHERE APPLICABLE MUST REMAIN WITHIN DIMENSIONS

CURRENT REV DESC: REFER TO REVISION COLUMN

EC NO: CO-000026895
DRWN: Lando Zhang 17-Jun-2025
CHK'D: Leo Li 24-Jun-2025
APPR: wolffw 25-Jun-2025

INITIAL REVISION:
DRWN: RFC_PLMIMP
APPR:

THIRD ANGLE PROJECTION | DRAWING: D-SIZE | SERIES: 34897

molex

MINI50 12-24CKT SMT HDR SALES DRAWING

PRODUCT CUSTOMER DRAWING

DOCUMENT NUMBER	DOC TYPE	DOC PART	REVISION
SD-34897-001	PSD	000	W12

MATERIAL NUMBER	CUSTOMER	SHEET NUMBER
	GENERAL MARKET	2 OF 5

DOCUMENT STATUS	Production	RELEASE DATE	25-Jun-2025 19:03:47

BEFORE REFLOW SOLDERING TEMPERATURE EXPOSURE

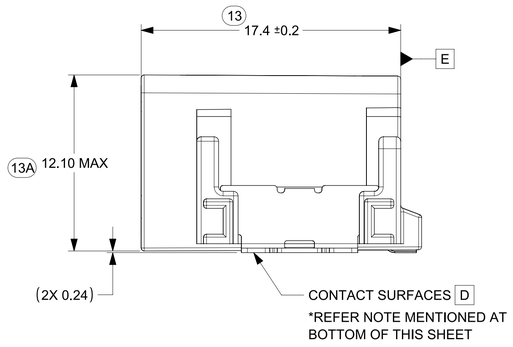

AFTER REFLOW SOLDERING TEMPERATURE EXPOSURE

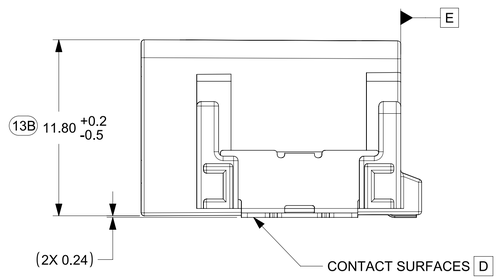

NOTE:
CONTACTS PER CKT:
- 12 CKT - 14 CONTACTS
- 16 CKT - 18 CONTACTS
- 20 CKT - 22 CONTACTS
- 24 CKT - 26 CONTACTS

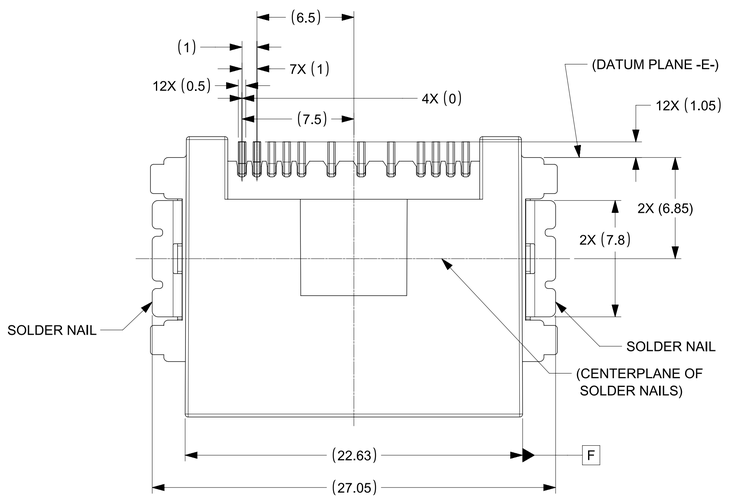

12 CKT SMT HEADER (BOTTOM VIEW)
(OTHER CIRCUIT SIZES ARE SIMILAR)

RECOMMENDED PCB LAYOUT:

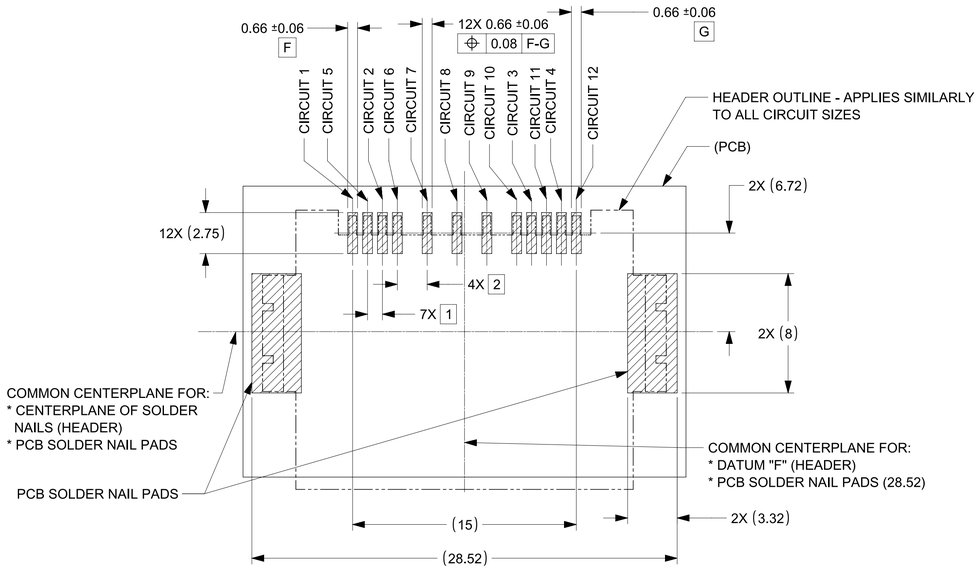

12 CKT PCB LAYOUT

THIS DRAWING CONTAINS INFORMATION THAT IS PROPRIETARY TO MOLEX ELECTRONIC TECHNOLOGIES, LLC AND SHOULD NOT BE USED WITHOUT WRITTEN PERMISSION

DIMENSION UNITS	SCALE
MM	5:1

GENERAL TOLERANCES (UNLESS SPECIFIED)		
ANGULAR TOL	±	1 °
4 PLACES	±	0
3 PLACES	±	0
2 PLACES	±	0.1
1 PLACE	±	0.2
0 PLACES	±	0

DRAFT WHERE APPLICABLE MUST REMAIN WITHIN DIMENSIONS

CURRENT REV DESC: REFER TO REVISION COLUMN

EC NO: CO-000026895
DRWN: Lando Zhang 17-Jun-2025
CHK'D: Leo Li 24-Jun-2025
APPR: wolffw 25-Jun-2025

INITIAL REVISION:
DRWN: RFC_PLMIMP
APPR:

molex

MINI50 12-24CKT SMT HDR SALES DRAWING

PRODUCT CUSTOMER DRAWING

DOCUMENT NUMBER	DOC TYPE	DOC PART	REVISION
SD-34897-001	PSD	000	W12

THIRD ANGLE PROJECTION	DRAWING	SERIES	MATERIAL NUMBER	CUSTOMER	SHEET NUMBER
	D-SIZE	34897		GENERAL MARKET	3 OF 5

DOCUMENT STATUS	Production	RELEASE DATE	25-Jun-2025 19:03:47

RECOMMENDED PCB LAYOUT:

16 CKT PCB LAYOUT

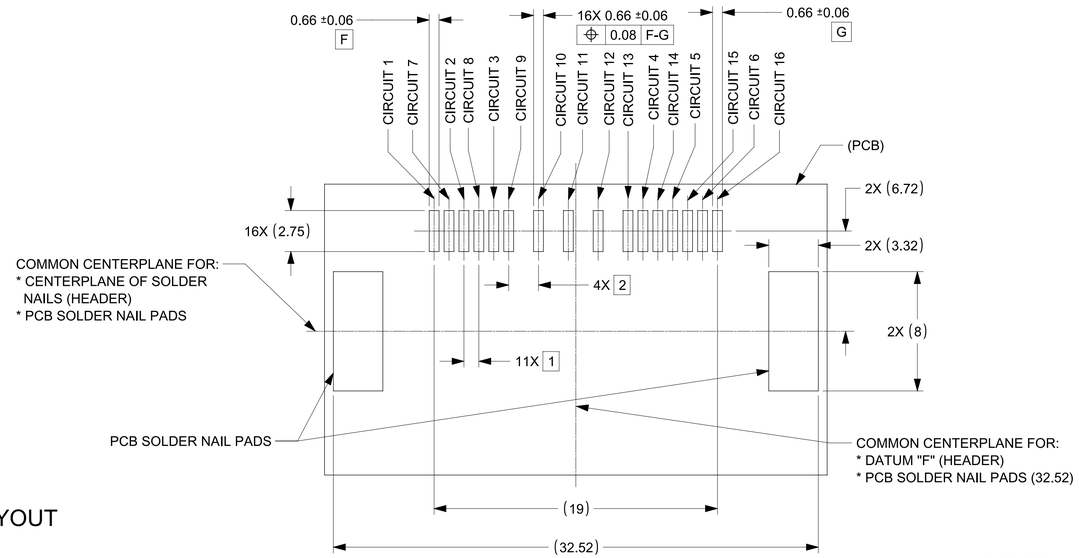

20 CKT PCB LAYOUT

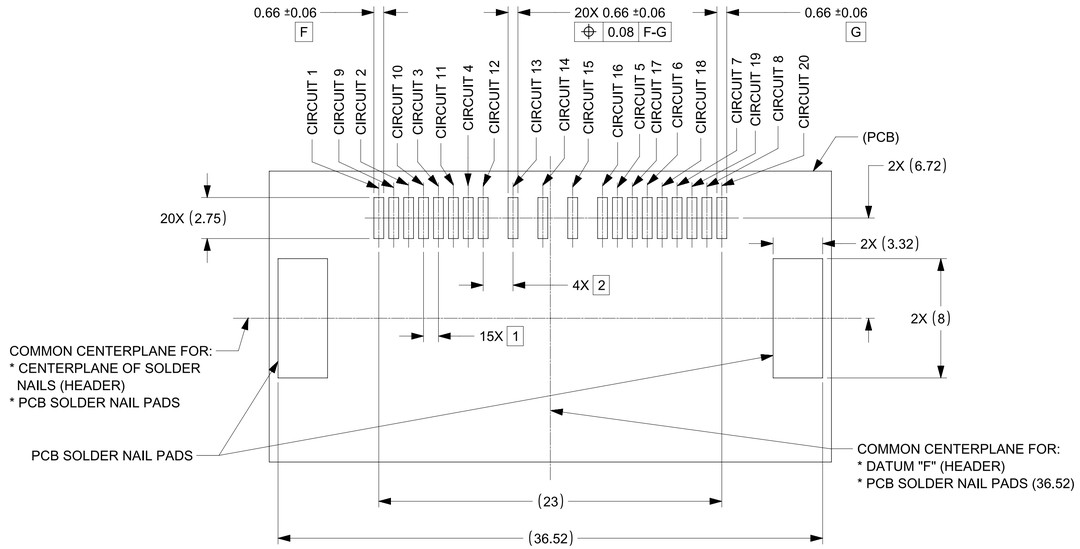

24 CKT PCB LAYOUT

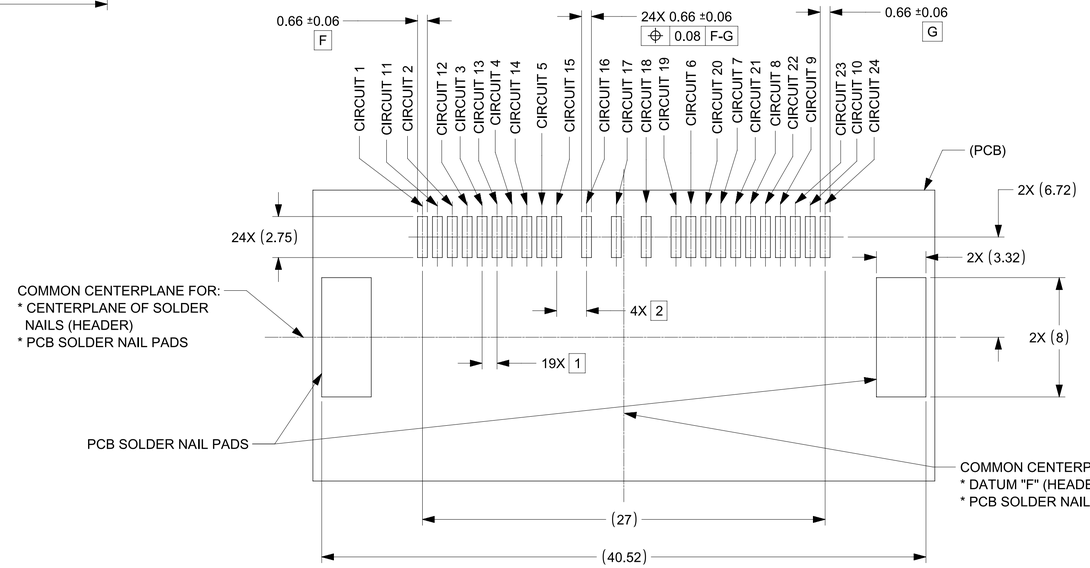

THIS DRAWING CONTAINS INFORMATION THAT IS PROPRIETARY TO MOLEX ELECTRONIC TECHNOLOGIES, LLC AND SHOULD NOT BE USED WITHOUT WRITTEN PERMISSION

DIMENSION UNITS	SCALE
MM	5:1

GENERAL TOLERANCES (UNLESS SPECIFIED)

ANGULAR TOL	±	1 °
4 PLACES	±	0
3 PLACES	±	0
2 PLACES	±	0.1
1 PLACE	±	0.2
0 PLACES	±	0

DRAFT WHERE APPLICABLE MUST REMAIN WITHIN DIMENSIONS

CURRENT REV DESC: REFER TO REVISION COLUMN

EC NO: CO-000026895
DRWN: Lando Zhang 17-Jun-2025
CHK'D: Leo Li 24-Jun-2025
APPR: wolffw 25-Jun-2025

INITIAL REVISION:
DRWN: RFC_PLMIMP
APPR:

molex

MINI50 12-24CKT SMT HDR SALES DRAWING

PRODUCT CUSTOMER DRAWING

DOCUMENT NUMBER	DOC TYPE	DOC PART	REVISION
SD-34897-001	PSD	000	W12

THIRD ANGLE PROJECTION	DRAWING	SERIES	MATERIAL NUMBER	CUSTOMER	SHEET NUMBER
	D-SIZE	34897		GENERAL MARKET	4 OF 5

DOCUMENT STATUS	Production	RELEASE DATE	25-Jun-2025 19:03:47

MINI50 SMT DUAL ROW HEADER ASSEMBLIES

CIRCUIT	POL	COLOR	MATERIAL NUMBER		BLADE PLATING	FLAMMABILITY
			TUBE PACKAGING PK-31301-688	TAPE AND REEL PACKAGING PK-31301-786		
12	A	BLACK	34897-9120	34897-8120	TIN	HB
	B	GRAY	34897-9121	34897-8121	TIN	
	C	DARK GRAY	34897-9122	34897-8122	TIN	
16	A	BLACK	34897-9160	34897-8160	TIN	HB
	B	GRAY	34897-9161	34897-8161	TIN	
	C	DARK GRAY	34897-9162	34897-8162	TIN	
20	A	BLACK	34897-9200	34897-8200	TIN	HB
	B	GRAY	34897-9201	34897-8201	TIN	
	C	DARK GRAY	34897-9202	34897-8202	TIN	
24	A	BLACK	34897-9240	34897-8240	TIN	HB
	B	GRAY	34897-9241	34897-8241	TIN	
	C	DARK GRAY	34897-9242	34897-8242	TIN	
12	A	BLACK	215423-9120	215423-8120	TIN	V0
	B	GRAY	215423-9121	215423-8121	TIN	
	C	DARK GRAY	215423-9122	215423-8122	TIN	
16	A	BLACK	215423-9160	215423-8160	TIN	V0
	B	GRAY	215423-9161	215423-8161	TIN	
	C	DARK GRAY	215423-9162	215423-8162	TIN	
20	A	BLACK	215423-9200	215423-8200	TIN	V0
	B	GRAY	215423-9201	215423-8201	TIN	
	C	DARK GRAY	215423-9202	215423-8202	TIN	
24	A	BLACK	215423-9240	215423-8240	TIN	V0
	B	GRAY	215423-9241	215423-8241	TIN	
	C	DARK GRAY	215423-9242	215423-8242	TIN	
12	A	BLACK	34897-5120	34897-6120	GOLD	HB
	B	GRAY	34897-5121	34897-6121	GOLD	
	C	DARK GRAY	34897-5122	34897-6122	GOLD	
16	A	BLACK	34897-5160	34897-6160	GOLD	HB
	B	GRAY	34897-5161	34897-6161	GOLD	
	C	DARK GRAY	34897-5162	34897-6162	GOLD	
20	A	BLACK	34897-5200	34897-6200	GOLD	HB
	B	GRAY	34897-5201	34897-6201	GOLD	
	C	DARK GRAY	34897-5202	34897-6202	GOLD	
24	A	BLACK	34897-5240	34897-6240	GOLD	HB
	B	GRAY	34897-5241	34897-6241	GOLD	
	C	DARK GRAY	34897-5242	34897-6242	GOLD	
12	A	BLACK	215423-5120	215423-6120	GOLD	V0
	B	GRAY	215423-5121	215423-6121	GOLD	
	C	DARK GRAY	215423-5122	215423-6122	GOLD	
16	A	BLACK	215423-5160	215423-6160	GOLD	V0
	B	GRAY	215423-5161	215423-6161	GOLD	
	C	DARK GRAY	215423-5162	215423-6162	GOLD	
20	A	BLACK	215423-5200	215423-6200	GOLD	V0
	B	GRAY	215423-5201	215423-6201	GOLD	
	C	DARK GRAY	215423-5202	215423-6202	GOLD	
24	A	BLACK	215423-5240	215423-6240	GOLD	V0
	B	GRAY	215423-5241	215423-6241	GOLD	
	C	DARK GRAY	215423-5242	215423-6242	GOLD	

MATING COMPONENTS

FOR ALL MATING COMPONENT PART NUMBERS SEE THE FOLLOWING SALES DRAWINGS

- GEN I RECEPTACLE ONLY: SD-34824-002
- GEN I RECEPTACLE WITH CPA: SD-34824-003
- GEN II: 2065230000

DOCUMENT STATUS	Production	RELEASE DATE	25-Jun-2025 19:03:47

THIS DRAWING CONTAINS INFORMATION THAT IS PROPRIETARY TO MOLEX ELECTRONIC TECHNOLOGIES, LLC AND SHOULD NOT BE USED WITHOUT WRITTEN PERMISSION

DIMENSION UNITS	SCALE
MM	1:1

GENERAL TOLERANCES (UNLESS SPECIFIED)

ANGULAR TOL	±	1 °
4 PLACES	±	0
3 PLACES	±	0
2 PLACES	±	0.1
1 PLACE	±	0.2
0 PLACES	±	0

DRAFT WHERE APPLICABLE MUST REMAIN WITHIN DIMENSIONS

CURRENT REV DESC: REFER TO REVISION COLUMN

EC NO: CO-000026895
DRWN: Lando Zhang 17-Jun-2025
CHK'D: Leo Li 24-Jun-2025
APPR: wolffw 25-Jun-2025

INITIAL REVISION:
DRWN: RFC_PLMIMP
APPR:

molex

MINI50 12-24CKT SMT HDR SALES DRAWING

PRODUCT CUSTOMER DRAWING

DOCUMENT NUMBER	DOC TYPE	DOC PART	REVISION
SD-34897-001	PSD	000	W12

THIRD ANGLE PROJECTION	DRAWING	SERIES	MATERIAL NUMBER	CUSTOMER	SHEET NUMBER
	D-SIZE	34897		GENERAL MARKET	5 OF 5