PTSA 0,5/22-2,5-Z - PCB terminal block

1990203

https://www.phoenixcontact.com/us/products/1990203

Please be informed that the data shown in this PDF document is generated from our online catalog. Please find the complete data in the user documentation. Our general terms of use for downloads are valid.

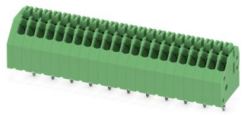

PCB terminal block, nominal current: 2 A, rated voltage (III/2): 250 V, nominal cross section: 0.5 mm^2, number of potentials: 22, number of rows: 1, number of positions per row: 22, product range: PTSA 0,5, pitch: 2.5 mm, connection method: Push-in spring connection, mounting: Wave soldering, conductor/PCB connection direction: 45 °, color: green, Pin layout: Zigzag pinning W, Solder pin [P]: 3.6 mm, number of solder pins per potential: 1, type of packaging: packed in cardboard. Offset soldering legs, two-rowed

Your advantages

- Time saving push-in connection, tools not required
- Defined contact force ensures that contact remains stable over the long term
- Angled connection enables multi-row arrangement on the PCB

Commercial data

Item number	1990203
Packing unit	50 pc
Minimum order quantity	50 pc
Note	Made to order (non-returnable)
Sales key	AA11
Product key	AAKBDA
Catalog page	Page 304 (CC-2005)
GTIN	4017918973773
Weight per piece (including packing)	8.35 g
Weight per piece (excluding packing)	7.65 g
Customs tariff number	85369010
Country of origin	PL

Technical data

Product properties

Type	PC termination block
Product line	COMBICON Terminals XS
Product type	Printed circuit board terminal
Product family	PTSA 0,5
Number of positions	22
Pitch	2.5 mm
Number of connections	22
Number of rows	1
Number of potentials	22
Pin layout	Zigzag pinning W
Solder pins per potential	1

Electrical properties

Nominal current I_N	2 A
Nominal voltage U_N	250 V
Degree of pollution	3
Rated voltage (III/3)	160 V
Rated surge voltage (III/3)	2.5 kV
Rated voltage (III/2)	250 V
Rated surge voltage (III/2)	2.5 kV
Rated voltage (II/2)	400 V
Rated surge voltage (II/2)	2.5 kV

Connection data

Connection technology

Type	PC termination block
Nominal cross section	0.5 mm²

Conductor connection

Connection method	Push-in spring connection
Conductor cross section rigid	0.14 mm² ... 0.5 mm²
Conductor cross section flexible	0.2 mm² ... 0.5 mm²
Conductor cross section AWG	24 ... 20
Stripping length	9 mm

Mounting

Mounting type	Wave soldering
Pin layout	Zigzag pinning W
Connection method	Push-in spring connection

Material specifications

Material data - contact

Note	WEEE/RoHS-compliant, free of whiskers according to IEC 60068-2-82/JEDEC JESD 201
Contact material	Cu alloy
Surface characteristics	hot-dip tin-plated
Metal surface terminal point (top layer)	Tin (4 - 8 µm Sn)
Metal surface soldering area (top layer)	Tin (4 - 8 µm Sn)

Material data - housing

Color (Housing)	green (6021)
Insulating material	PA
Insulating material group	I
CTI according to IEC 60112	600
Flammability rating according to UL 94	V0
Glow wire flammability index GWFI according to EN 60695-2-12	850
Glow wire ignition temperature GWIT according to EN 60695-2-13	775
Temperature for the ball pressure test according to EN 60695-10-2	125 °C

Dimensions

Dimensional drawing	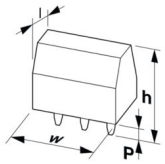
Pitch	2.5 mm
Width [w]	56.5 mm
Height [h]	16.7 mm
Length [l]	12 mm
Installed height	13.1 mm
Solder pin length [P]	3.6 mm
Pin dimensions	0.4 x 0.75 mm

PCB design

Pin spacing	2.5 mm
Hole diameter	1 mm

Mechanical tests

Connection test

Specification	IEC 60998-2-2:1991-10
Result	Test passed

Test for conductor damage and slackening

Specification	IEC 60998-2-2:1991-10

Result	Test passed

Pull-out test

Specification	IEC 60998-2-2:1991-10
Conductor cross section/conductor type/tractive force setpoint/actual value	0.14 mm² / solid / > 7 N
	0.2 mm² / flexible / > 10 N
	0.5 mm² / solid / > 30 N
	0.5 mm² / flexible / > 30 N

Electrical tests

Temperature-rise test

Specification	IEC 60998-2-1:1990-04
Requirement temperature-rise test	Increase in temperature ≤ 45 K

Insulation resistance

Specification	IEC 60998-2-2:1991-10
Insulation resistance, neighboring positions	10^9 Ω

Air clearances and creepage distances |

Specification	IEC 60664-1:2007-04
Insulating material group	I
Comparative tracking index (IEC 60112)	CTI 600
Rated insulation voltage (III/3)	160 V
Rated surge voltage (III/3)	2.5 kV
minimum clearance value - non-homogenous field (III/3)	1.5 mm
minimum creepage distance (III/3)	2 mm
Rated insulation voltage (III/2)	250 V
Rated surge voltage (III/2)	2.5 kV
minimum clearance value - non-homogenous field (III/2)	1.5 mm
minimum creepage distance (III/2)	1.5 mm
Rated insulation voltage (II/2)	400 V
Rated surge voltage (II/2)	2.5 kV
minimum clearance value - non-homogenous field (II/2)	1.5 mm
minimum creepage distance (II/2)	2 mm

Environmental and real-life conditions

Vibration test

Specification	IEC 60068-2-6:1995-03
Frequency	10 - 150 - 10 Hz
Sweep speed	1 octave/min
Amplitude	0.35 mm (10 Hz ... 60.1 Hz)
Sweep speed	5g (60.1 Hz ... 150 Hz)
Test duration per axis	2.5 h

Glow-wire test

Specification	IEC 60998-2-2:1991-10
Temperature	850 °C
Time of exposure	5 s

Ambient conditions

Ambient temperature (operation)	-40 °C ... 85 °C
Ambient temperature (storage/transport)	-40 °C ... 70 °C
Relative humidity (storage/transport)	30 % ... 70 %
Ambient temperature (assembly)	-5 °C ... 55 °C

Packaging specifications

Type of packaging	packed in cardboard

Drawings

Dimensional drawing

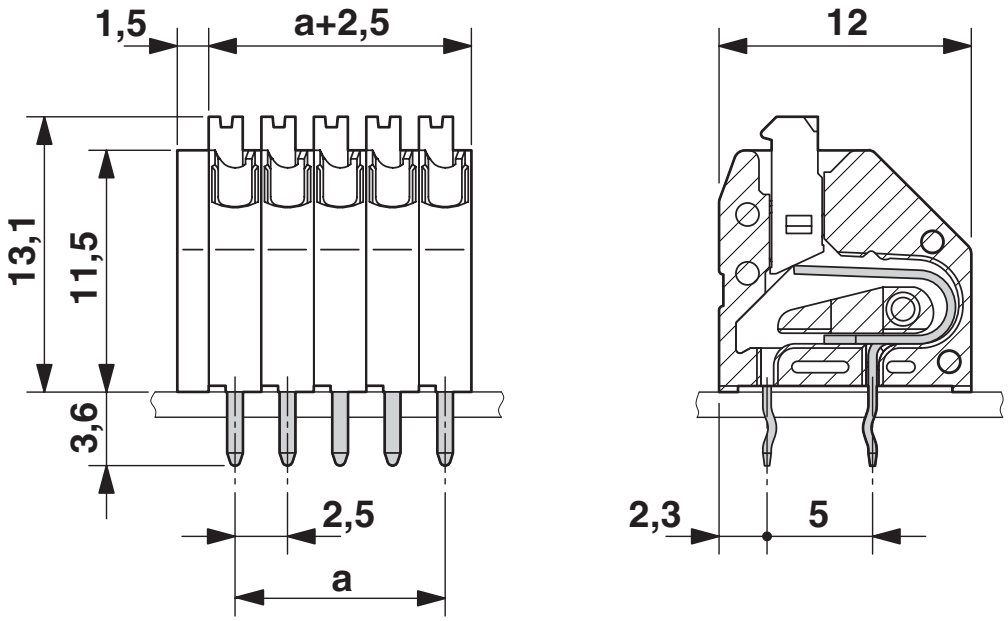

The figure shows the 5-pos. version

Diagram

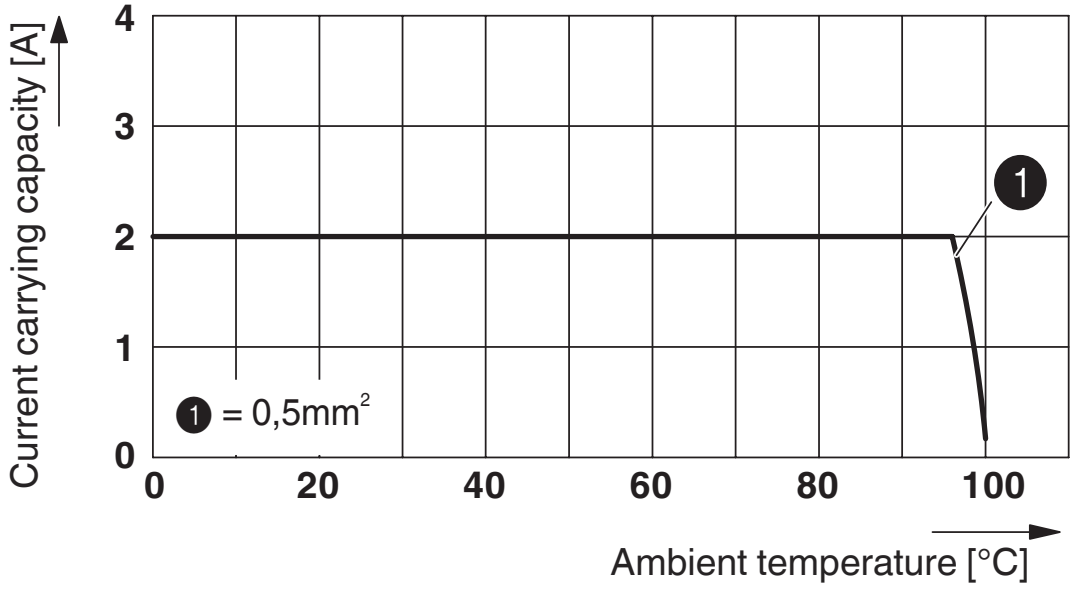

Derating diagram for 5 pins;reduction factor=1

Drilling plan/solder pad geometry

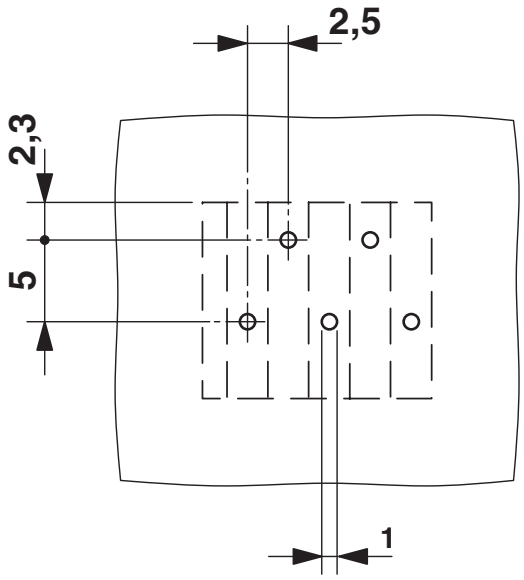

The figure shows the 5-pos. version – Zig-zag pinning starts at the right-hand position. Other pinning available on request.

Approvals

To download certificates, visit the product detail page: https://www.phoenixcontact.com/us/products/1990203

cULus Recognized
Approval ID: E60425-20030527

	Nominal voltage U_N	Nominal current I_N	Cross section AWG	Cross section mm^2
Use group B				
Field wiring	300 V	1 A	26 - 20	-
Factory wiring	300 V	2 A	26 - 20	-
Use group D				
Field wiring	300 V	1 A	26 - 20	-
Factory wiring	300 V	2 A	26 - 20	-

VDE Gutachten mit Fertigungsüberwachung
Approval ID: 40013932

	Nominal voltage U_N	Nominal current I_N	Cross section AWG	Cross section mm^2
	250 V	2 A	-	- 0.5

Classifications

ECLASS

ECLASS-11.0	27460101
ECLASS-12.0	27460101
ECLASS-13.0	27460101

ETIM

ETIM 9.0	EC002643

UNSPSC

UNSPSC 21.0	39121400

Environmental product compliance

China RoHS	Environmentally friendly use period: unlimited = EFUP-e
	No hazardous substances above threshold values

Accessories

SZF 0-0,4X2,5 - Screwdriver

1204504

https://www.phoenixcontact.com/us/products/1204504



Actuation tool, for ST terminal blocks, also suitable for use as a bladed screwdriver, size: 0.4 x 2.5 x 75 mm, 2-component grip, with non-slip grip

Phoenix Contact 2024 © - all rights reserved
https://www.phoenixcontact.com

Phoenix Contact USA
586 Fulling Mill Road
Middletown, PA 17057, United States
(+717) 944-1300
info@phoenixcon.com