Optocoupler, Phototriac Output, High dV/dt, Low Input Current

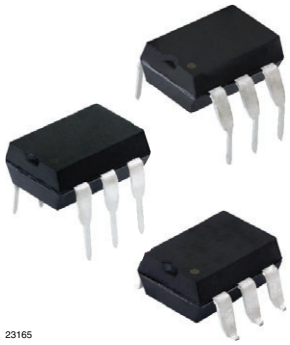

23165

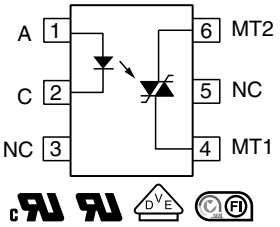

FEATURES

- High static dV/dt 5 kV/µs
- High input sensitivity I_{FT} = 1.6 mA, 2 mA, and 3 mA
- 800 V blocking voltage
- 300 mA on-state current
- Isolation rated voltage 4420 V_{RMS}
- Material categorization: for definitions of compliance please see www.vishay.com/doc?99912

Pb-free

e3

RoHS COMPLIANT

APPLICATIONS

- Solid-state relays
- Industrial controls
- Office equipment
- Consumer appliances

AGENCY APPROVALS

- UL
- cUL
- DIN EN 60747-5-5 (VDE 0884-5), available with option 1
- FIMKO

LINKS TO ADDITIONAL RESOURCES

3D Models | Design Tools | Related Documents | SPICE Models | Footprints | Schematics

DESCRIPTION

The VO4258 phototriac consists of a GaAs IRLED optically coupled to a photosensitive non-zero crossing TRIAC packaged in a DIP-6 package.

High input sensitivity is achieved by using an emitter follower phototransistor and a cascaded SCR predriver resulting in an LED trigger current of 1.6 mA for bin D, 2 mA for bin H, and 3 mA for bin M.

The new non zero phototriac family use a proprietary dV/dt clamp resulting in a static dV/dt of greater than 5 kV/µs.

The VO4258 phototriac isolates low-voltage logic from 120 V_{AC}, 240 V_{AC}, and 380 V_{AC} lines to control resistive, inductive, or capacitive loads including motors, solenoids, high current thyristors or TRIAC and relays.

ORDERING INFORMATION

V	O	4	2	5	#	X	-	X	0	0	#	T

PART NUMBER — PACKAGE OPTION — TAPE AND REEL

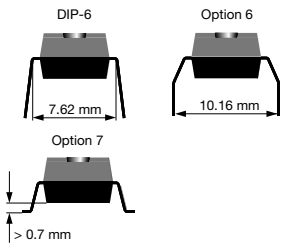

AGENCY CERTIFIED / PACKAGE	V_{DRM} 800		
	TRIGGER CURRENT, I_{FT} (mA)		
UL, cUL, BSI, FIMKO	**1.6**	**2**	**3**
DIP-6	VO4258D	VO4258H	VO4258M
DIP-6, 400 mil, option 6	-	VO4258H-X006	-
SMD-6, option 7	VO4258D-X007T	VO4258H-X007T	VO4258M-X007T
VDE, UL, cUL, BSI, FIMKO	**1.6**	**2**	**3**
SMD-6, option 7	-	-	-

For technical questions, contact: optocoupleranswers@vishay.com

THIS DOCUMENT IS SUBJECT TO CHANGE WITHOUT NOTICE. THE PRODUCTS DESCRIBED HEREIN AND THIS DOCUMENT ARE SUBJECT TO SPECIFIC DISCLAIMERS, SET FORTH AT www.vishay.com/doc?91000

ABSOLUTE MAXIMUM RATINGS (T_{amb} = 25 °C, unless otherwise specified)					
PARAMETER	**TEST CONDITION**	**PART**	**SYMBOL**	**VALUE**	**UNIT**
INPUT					
Reverse voltage			V_R	6	V
Forward current			I_F	60	mA
Derate from 25 °C				1.33	mW/°C
OUTPUT					
Peak off-state voltage		VO4258D/H/M	V_{DRM}	800	V
RMS on-state current			I_{TM}	300	mA
Derate from 25 °C				6.6	mW/°C
COUPLER					
Storage temperature range			T_{stg}	-55 to +150	°C
Ambient temperature range			T_{amb}	-55 to +100	°C
Soldering temperature	Max. ≤ 10 s dip soldering ≥ 0.5 mm from case bottom		T_{sld}	260	°C

Note

- Stresses in excess of the absolute maximum ratings can cause permanent damage to the device. Functional operation of the device is not implied at these or any other conditions in excess of those given in the operational sections of this document. Exposure to absolute maximum ratings for extended periods of the time can adversely affect reliability.

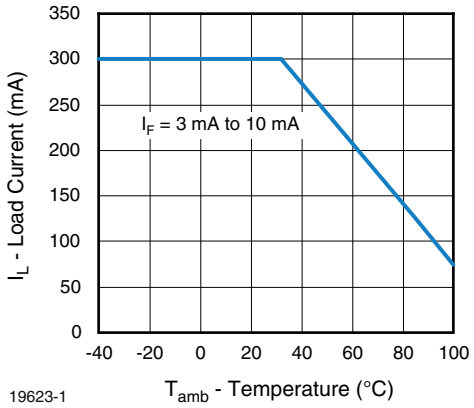

Fig. 1 - Recommended Operating Condition

For technical questions, contact: optocoupleranswers@vishay.com
THIS DOCUMENT IS SUBJECT TO CHANGE WITHOUT NOTICE. THE PRODUCTS DESCRIBED HEREIN AND THIS DOCUMENT ARE SUBJECT TO SPECIFIC DISCLAIMERS, SET FORTH AT www.vishay.com/doc?91000

THERMAL CHARACTERISTICS

PARAMETER	SYMBOL	VALUE	UNIT
LED power dissipation	P_{diss}	100	mW
Output power dissipation	P_{diss}	500	mW
Total power dissipation	P_{tot}	600	mW
Maximum LED junction temperature	$T_{jmax.}$	125	°C
Maximum output die junction temperature	$T_{jmax.}$	125	°C
Thermal resistance, junction emitter to board	θ_{JEB}	150	°C/W
Thermal resistance, junction emitter to case	θ_{JEC}	139	°C/W
Thermal resistance, junction detector to board	θ_{JDB}	78	°C/W
Thermal resistance, junction detector to case	θ_{JDC}	103	°C/W
Thermal resistance, junction emitter to junction detector	θ_{JED}	496	°C/W
Thermal resistance, case to ambient	θ_{CA}	3563	°C/W

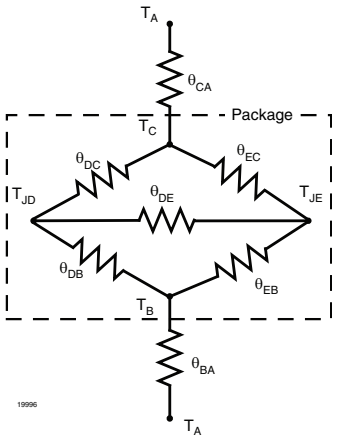

Note

- The thermal characteristics table above were measured at 25 °C and the thermal model is represented in the thermal network below. Each resistance value given in this model can be used to calculate the temperatures at each node for a given operating condition. The thermal resistance from board to ambient will be dependent on the type of PCB, layout and thickness of copper traces. For a detailed explanation of the thermal model, please reference Vishay's Thermal Characteristics of Optocouplers application note.

ELECTRICAL CHARACTERISTICS (T_{amb} = 25 °C, unless otherwise specified)

PARAMETER	TEST CONDITION	PART	SYMBOL	MIN.	TYP.	MAX.	UNIT
INPUT							
Forward voltage	I_F = 10 mA		V_F	-	1.2	1.4	V
Reverse current	V_R = 6 V		I_R	-	0.1	10	µA
Input capacitance	V_F = 0 V, f = 1 MHz		C_I	-	40	-	pF
OUTPUT							
Repetitive peak off-state voltage	I_{DRM} = 100 µA	VO4258D/H/M	V_{DRM}	800	-	-	V
Off-state current	$V_D = V_{DRM}$		I_{DRM}	-	-	100	µA
On-state voltage	I_T = 300 mA		V_{TM}	-	-	3	V
On-current	PF = 1, $V_{T(RMS)}$ = 1.7 V		I_{TM}	-	-	300	mA
Critical state of rise of off-state voltage	V_D = 0.67 V_{DRM}, T_J = 25 °C		dV/dt_{cr}	5000	-		V/µs
COUPLER							
LED trigger current, current required to latch output	V_D = 3 V	VO4258D	I_{FT}	-	-	1.6	mA
		VO4258H	I_{FT}	-	-	2	mA
		VO4258M	I_{FT}	-	-	3	mA
Capacitance (input to output)	f = 1 MHz, V_{IO} = 0 V		C_{IO}	-	0.8	-	pF

Note

- Minimum and maximum values were tested requirements. Typical values are characteristics of the device and are the result of engineering evaluation. Typical values are for information only and are not part of the testing requirements.

For technical questions, contact: optocoupleranswers@vishay.com
THIS DOCUMENT IS SUBJECT TO CHANGE WITHOUT NOTICE. THE PRODUCTS DESCRIBED HEREIN AND THIS DOCUMENT ARE SUBJECT TO SPECIFIC DISCLAIMERS, SET FORTH AT www.vishay.com/doc?91000

SAFETY AND INSULATION RATINGS				
PARAMETER	**TEST CONDITION**	**SYMBOL**	**VALUE**	**UNIT**
Climatic classification	According to IEC 68 part 1		55 / 100 / 21	
Comparative tracking index		CTI	175	
Maximum rated withstanding isolation voltage	t = 1 min	V_{ISO}	4420	V_{RMS}
Maximum transient isolation voltage		V_{IOTM}	8000	V_{peak}
Maximum repetitive peak isolation voltage		V_{IORM}	890	V_{peak}
Isolation resistance	V_{IO} = 500 V, T_{amb} = 25 °C	R_{IO}	$\geq 10^{12}$	Ω
	V_{IO} = 500 V, T_{amb} = 100 °C	R_{IO}	$\geq 10^{11}$	Ω
Output safety power		P_{SO}	500	mW
Input safety current		I_{SI}	250	mA
Safety temperature		T_S	175	°C
Creepage distance			≥ 7	mm
Clearance distance			≥ 7	mm
Insulation thickness		DTI	≥ 0.4	mm
Pollution degree (DIN VDE 0109)			2	

Note

- As per IEC 60747-5-5, § 7.4.3.8.2, this optocoupler is suitable for “safe electrical insulation” only within the safety ratings. Compliance with the safety ratings shall be ensured by means of protective circuits.

TYPICAL CHARACTERISTICS (T_{amb} = 25 °C, unless otherwise specified)

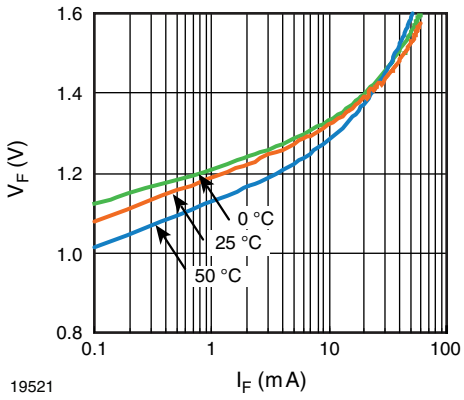

Fig. 2 - Diode Forward Voltage vs. Forward Current

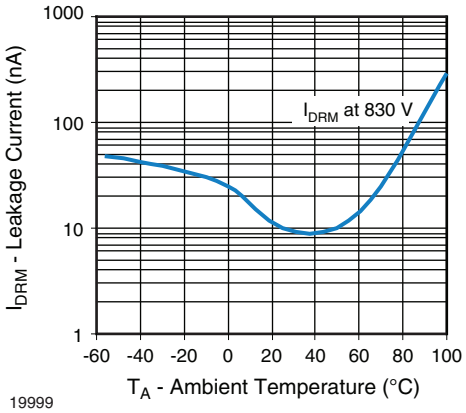

Fig. 4 - Leakage Current vs. Ambient Temperature

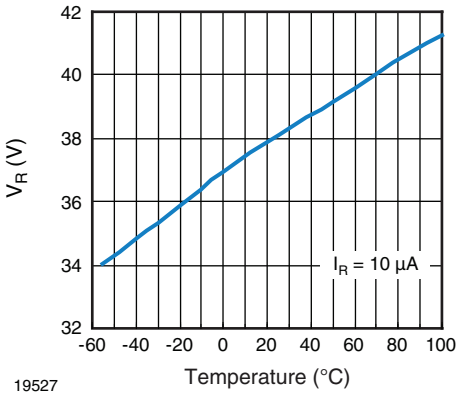

Fig. 3 - Diode Reverse Voltage vs. Temperature

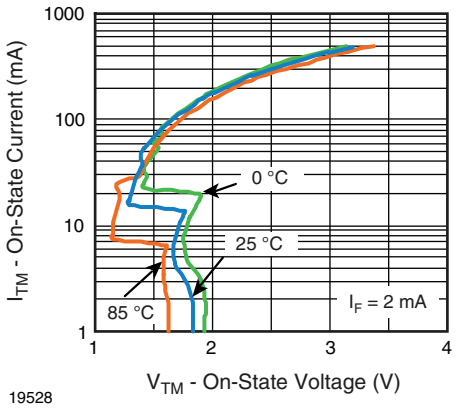

Fig. 5 - Output On Current (I_{TM}) vs. Voltage

For technical questions, contact: optocoupleranswers@vishay.com
THIS DOCUMENT IS SUBJECT TO CHANGE WITHOUT NOTICE. THE PRODUCTS DESCRIBED HEREIN AND THIS DOCUMENT ARE SUBJECT TO SPECIFIC DISCLAIMERS, SET FORTH AT www.vishay.com/doc?91000

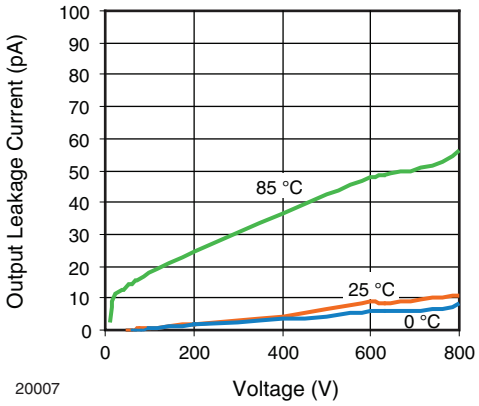

Fig. 6 - Output Off Current (Leakage) vs. Voltage

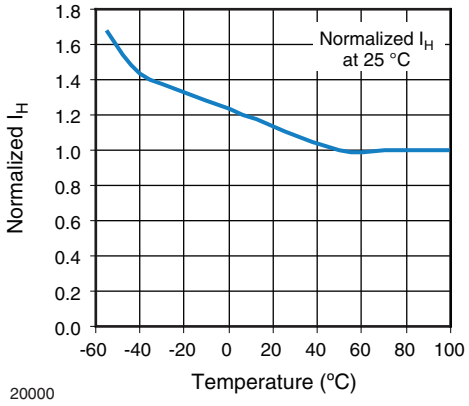

Fig. 9 - Normalized Holding Current vs. Temperature

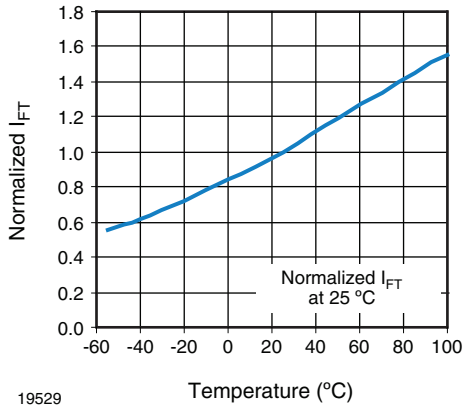

Fig. 7 - Normalized Trigger Input Current vs. Temperature

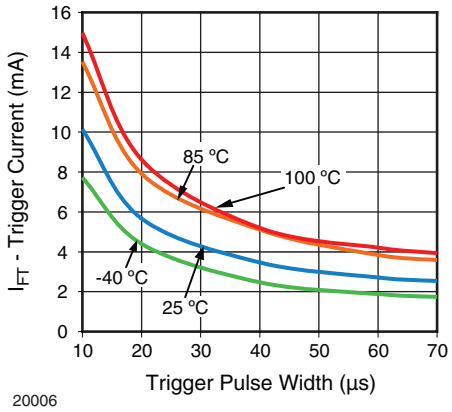

Fig. 10 - I_{FT} vs. LED Pulse Width

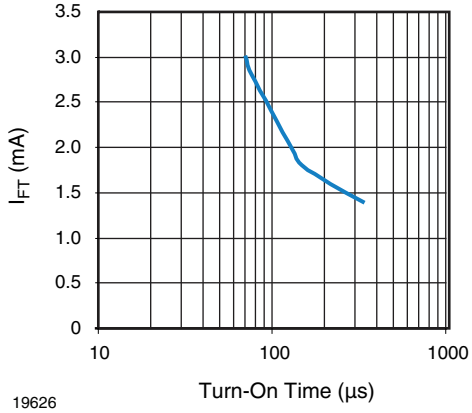

Fig. 8 - Trigger Current vs. Turn-On Time

For technical questions, contact: optocoupleranswers@vishay.com
THIS DOCUMENT IS SUBJECT TO CHANGE WITHOUT NOTICE. THE PRODUCTS DESCRIBED HEREIN AND THIS DOCUMENT ARE SUBJECT TO SPECIFIC DISCLAIMERS, SET FORTH AT www.vishay.com/doc?91000

PACKAGE DIMENSIONS in millimeters

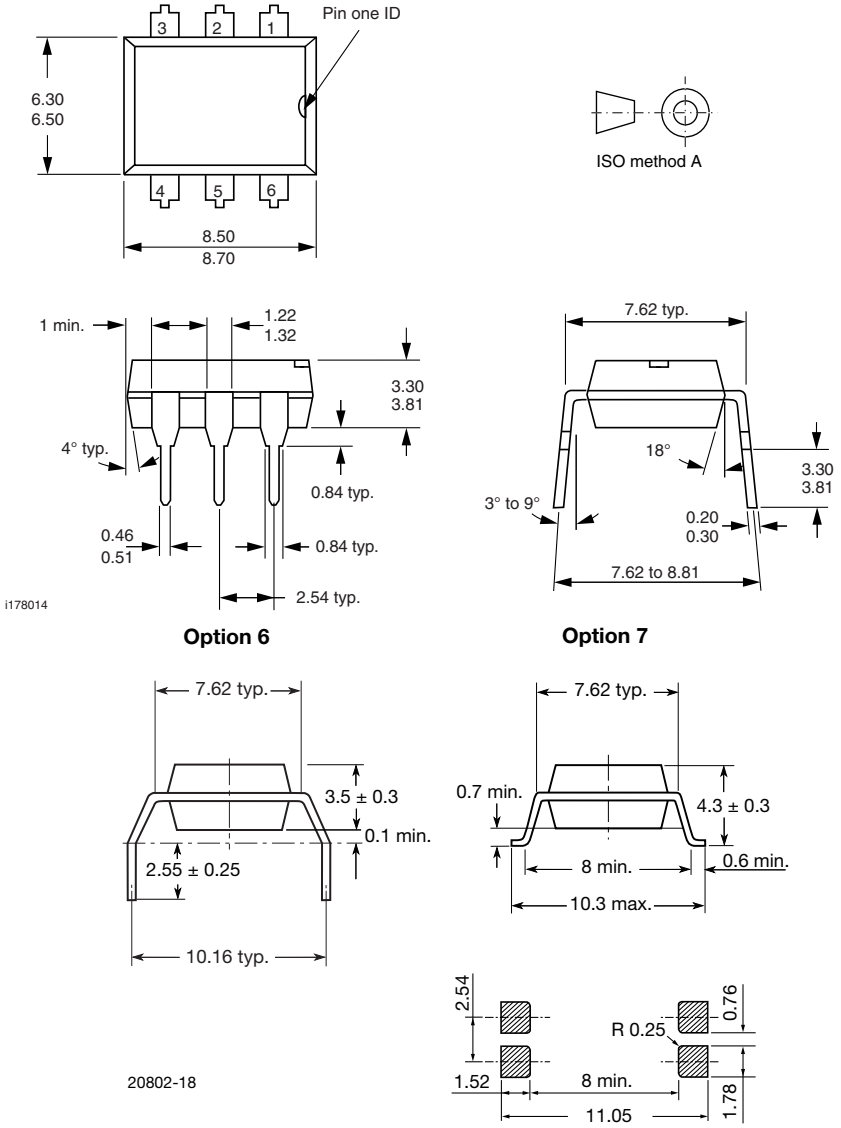

PACKAGE MARKING (example)

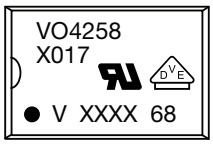

Notes

- XXXX = LMC (lot marking code)
- VDE logo is only marked on option 1 parts. Tape and reel suffix (T) is not part of the package marking

For technical questions, contact: optocoupleranswers@vishay.com
THIS DOCUMENT IS SUBJECT TO CHANGE WITHOUT NOTICE. THE PRODUCTS DESCRIBED HEREIN AND THIS DOCUMENT ARE SUBJECT TO SPECIFIC DISCLAIMERS, SET FORTH AT www.vishay.com/doc?91000

Disclaimer

ALL PRODUCT, PRODUCT SPECIFICATIONS AND DATA ARE SUBJECT TO CHANGE WITHOUT NOTICE TO IMPROVE RELIABILITY, FUNCTION OR DESIGN OR OTHERWISE.

Vishay Intertechnology, Inc., its affiliates, agents, and employees, and all persons acting on its or their behalf (collectively, “Vishay”), disclaim any and all liability for any errors, inaccuracies or incompleteness contained in any datasheet or in any other disclosure relating to any product.

Vishay makes no warranty, representation or guarantee regarding the suitability of the products for any particular purpose or the continuing production of any product. To the maximum extent permitted by applicable law, Vishay disclaims (i) any and all liability arising out of the application or use of any product, (ii) any and all liability, including without limitation special, consequential or incidental damages, and (iii) any and all implied warranties, including warranties of fitness for particular purpose, non-infringement and merchantability.

Statements regarding the suitability of products for certain types of applications are based on Vishay's knowledge of typical requirements that are often placed on Vishay products in generic applications. Such statements are not binding statements about the suitability of products for a particular application. It is the customer's responsibility to validate that a particular product with the properties described in the product specification is suitable for use in a particular application. Parameters provided in datasheets and / or specifications may vary in different applications and performance may vary over time. All operating parameters, including typical parameters, must be validated for each customer application by the customer's technical experts. Product specifications do not expand or otherwise modify Vishay's terms and conditions of purchase, including but not limited to the warranty expressed therein.

Hyperlinks included in this datasheet may direct users to third-party websites. These links are provided as a convenience and for informational purposes only. Inclusion of these hyperlinks does not constitute an endorsement or an approval by Vishay of any of the products, services or opinions of the corporation, organization or individual associated with the third-party website. Vishay disclaims any and all liability and bears no responsibility for the accuracy, legality or content of the third-party website or for that of subsequent links.

Vishay products are not designed for use in life-saving or life-sustaining applications or any application in which the failure of the Vishay product could result in personal injury or death unless specifically qualified in writing by Vishay. Customers using or selling Vishay products not expressly indicated for use in such applications do so at their own risk. Please contact authorized Vishay personnel to obtain written terms and conditions regarding products designed for such applications.

No license, express or implied, by estoppel or otherwise, to any intellectual property rights is granted by this document or by any conduct of Vishay. Product names and markings noted herein may be trademarks of their respective owners.

© 2024 VISHAY INTERTECHNOLOGY, INC. ALL RIGHTS RESERVED

THIS DOCUMENT IS SUBJECT TO CHANGE WITHOUT NOTICE. THE PRODUCTS DESCRIBED HEREIN AND THIS DOCUMENT ARE SUBJECT TO SPECIFIC DISCLAIMERS, SET FORTH AT www.vishay.com/doc?91000