preci-dip

# DIL SOCKETS

**SERIES 170**

**170-PP-XXX-00-001101**
2.54 mm, Solder tail, Turret head

DIL headers with turret head for wiring applications

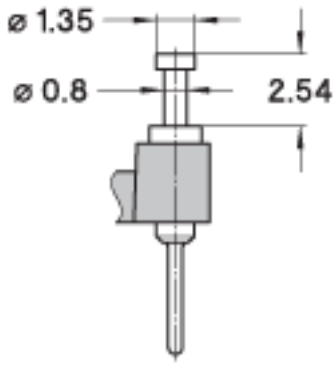


## TECHNICAL SPECS.:

| | |
|---|---|
| **Insulator** | Black glass filled polyester PCT-GF30-FR |
| **Flammability** | UL 94V-O |
| **Contact** | Brass CuZn36Pb3 (C36000) |
| **Connecting pin Ø** | 0.5 mm |
| **Mechanical life** | Min. 100 cycles |
| **Rated current** | 1 A |
| **Dielectric strength** | Min. 1000 V RMS |

## ORDERING INFORMATION:

| PP Plating code | Termination | Connecting pin |
|---|---|---|
| 10 | Gold 0.25 µm | Gold 0.25 µm |
| 80 | Tin | Tin |

## ADVANCED INFORMATION:

| Order Codes | Poles | A | B | C | D | E | See |
|---|---|---|---|---|---|---|---|
| 170-PP-210-00-001101 | 10 | 12.6 | 5.08 | 7.6 | | | |
| 170-PP-304-00-001101 | 4 | 5.0 | 7.62 | 10.1 | | | |
| 170-PP-306-00-001101 | 6 | 7.6 | 7.62 | 10.1 | | | |
| 170-PP-308-00-001101 | 8 | 10.1 | 7.62 | 10.1 | | | |

**PRECI-DIP SA** Rue Saint-Henri 11 P.P.Box 834 CH-2800 Delémont / Switzerland
PHONE +41 (0)32 421 04 00 FAX +41 (0)32 421 04 01 E-MAIL sales@precidip.com www.precidip.com

| | | | | |
|---|---|---|---|---|
| 170-PP-310-00-001101 | 10 | 12.6 | 7.62 | 10.1 |
| 170-PP-312-00-001101 | 12 | 15.2 | 7.62 | 10.1 |
| 170-PP-314-00-001101 | 14 | 17.7 | 7.62 | 10.1 |
| 170-PP-316-00-001101 | 16 | 20.3 | 7.62 | 10.1 |
| 170-PP-318-00-001101 | 18 | 22.8 | 7.62 | 10.1 |
| 170-PP-320-00-001101 | 20 | 25.3 | 7.62 | 10.1 |
| 170-PP-322-00-001101 | 22 | 27.8 | 7.62 | 10.1 |
| 170-PP-324-00-001101 | 24 | 30.4 | 7.62 | 10.1 |
| 170-PP-328-00-001101 | 28 | 35.5 | 7.62 | 10.1 |
| 170-PP-420-00-001101 | 20 | 25.4 | 10.16 | 12.6 |
| 170-PP-422-00-001101 | 22 | 27.8 | 10.16 | 12.6 |
| 170-PP-424-00-001101 | 24 | 30.4 | 10.16 | 12.6 |
| 170-PP-428-00-001101 | 28 | 35.5 | 10.16 | 12.6 |
| 170-PP-432-00-001101 | 32 | 40.6 | 10.16 | 12.6 |
| 170-PP-610-00-001101 | 10 | 12.7 | 15.24 | 17.7 |
| 170-PP-624-00-001101 | 24 | 30.5 | 15.24 | 17.7 |
| 170-PP-628-00-001101 | 28 | 35.5 | 15.24 | 17.7 |
| 170-PP-632-00-001101 | 32 | 40.6 | 15.24 | 17.7 |
| 170-PP-636-00-001101 | 36 | 45.7 | 15.24 | 17.7 |
| 170-PP-640-00-001101 | 40 | 50.8 | 15.24 | 17.7 |
| 170-PP-642-00-001101 | 42 | 53.3 | 15.24 | 17.7 |
| 170-PP-648-00-001101 | 48 | 60.9 | 15.24 | 17.7 |
| 170-PP-650-00-001101 | 50 | 63.5 | 15.24 | 17.7 |
| 170-PP-652-00-001101 | 52 | 66.0 | 15.24 | 17.7 |
| 170-PP-950-00-001101 | 50 | 63.5 | 22.86 | 25.3 |
| 170-PP-952-00-001101 | 52 | 66.0 | 22.86 | 25.3 |
| 170-PP-964-00-001101 | 64 | 81.2 | 22.86 | 25.3 |

# TECHNICAL ASSISTANCE

## GENERAL SPECIFICATIONS:

The values listed below are general specs applying for PRECI-DIP DIL sockets. Please see individual catalog page for additional and product specific technical data.

| | |
|---|---|
| Operating temperature range | -55 ... +125 °C |
| Climatic category (IEC) | 55/125/21 |
| Operating humidity range | annual mean 75 % |
| Max working voltage | 100 VRMS/150 VDC |

PRECI-DIP sockets are recognized by Underwriters Laboratories Inc. and listed under "Connectors for Use in Data, Signal, Control and Power Applications", File Nr. E174442.

## MECHANICAL CHARACTERISTICS:

| | |
|---|---|
| Clip retention | Min. 40 N (no displacement under axial force applied) |
| Contact (sleeve / clip) retention | Min. 3.3 N acc. to MIL-DTL-83734, pt 4.6.4.2 |

## ELECTRICAL CHARACTERISTICS:

| | |
|---|---|
| Insulation resistance between any two adjacent contacts | Min. 10'000 M at 500 V AC |
| Capacitance between any two adjacent contacts | Max. 1 pF |
| Air and creepage distances between any two adjacent contacts | Min. 0.6 mm (Min. 0.2 mm FOR SHRINK-DIP SOCKETS) |

## ENVIRONMENTAL CHARACTERISTICS:

The sockets withstand the following environmental tests without mechanical and electrical defects:

- Dry heat steady state IEC 60512-11-9.11i / 60068-2-2.Bb: 125 °C, 16h
- Damp heat cyclic IEC 60512-11-12.11m / 60068-2-30.Db: 25/55 °C, 90 – 100 %rH, 1 cycle of 24 h
- Cold steady state IEC 60512-11-10.11j / 60068-2-1.A: -55 °C, 2 h
- Thermal shock IEC 60512-11-4.11d / 60068-2-14.Na: -55/125 °C, 5 cycles 30 min
- Sinusoidal vibrations IEC 60512-6-4.6d / 60068-2-6.Fc: 10 to 500 Hz, 10 g, 1 octave/min, 10 cycles for each axis
- Shock IEC 60512-6-3.6c / 60068-2-27.Ea: 50 g, 11 ms, 3 shocks in three axis

During the above two tests no contact interruption >50 ns does appear.

- Solderability J-STD-002A, Test A, 245°C, 5 s solder alloy SnAg3.8Cu0.7
- Resistance to soldering heat J-STD-0020C, 260°C, 20 s
- Moisture sensitivity J-STD-020C level 1
- Resistance to corrosion :
  1) Salt spray test IEC 60068-2-11.Ka: 48 h
  2) Sulfur dioxide (SO2) test IEC 60068-2-42 Kc: 96 h at 25 ppm SO2, 25 °C, 75 %rH
  3) Hydrogen sulfide (H2S) test IEC 60068-2-43 Kd: 96 h at 12 ppm H2S, 25 °C, 75 %rH

## SOLDERLESS COMPLIANT PRESS-FIT CHARACTERISTICS:

**PRESS-FIT CHARACTERISTICS MEASURED ACC. TO IEC 60352-5**

- Press-in force: 90 N max. (at min. hole dia.) / 65 N typ.
- Push-out force: 30 N min. (at max. hole dia.) / 50 N typ.
- Push-out 3rd cycle: 20 N min. (at max. hole dia.)

**PCB HOLE DIMENSIONS**

- 2.54 mm grid: Finished hole Ø: 1 + 0.09/-0.06 mm | Drilled hole Ø: 1.15 ± 0.02 mm

**PCB HOLE PLATING**

- PCB surface finish: Hole plating
- Tin: 5-15 µm tin over min. 25 µm copper
- Copper: min. 25 µm copper
- Gold over nickel: 0.05-0.2 µm gold over 2.5-5 µm nickel over min. 25 µm copper