DATASHEET

# Ambient Light Sensor
# 3mm T-1
# ALS-PDT144-6C/L451

## Features



- Light to Current, analog output
- Good output linearity across wide illumination range
- Operation temperature performance, -30°C to 85°C
- Wide supply voltage range, 3V to 24V
- High efficiency light current output
- Lower dark current 0.1uA
- Lower cost
- Size : 3mm Lamp (Flat lens)
- The product itself will remain within RoHS compliant version
- Compliance with EU REACH
- Compliance Halogen Free(Br < 900ppm, Cl < 900ppm, Br+Cl < 1500ppm)

## Description

- The ALS-PDT144-6C/L451 is an ambient light sensor using a photo transistor in a DIP package. It is used to replace traditional CdS sensors, since Cadmium is no longer allowed by RoHS.

## Applications

- Detection of ambient light to control electrical unit
  - Lighting devices – Road lamp, Night lamp
  - Consumer device – LCD TV, Toys, Gaming


Copyright © 2012, Everlight All Rights Reserved. Release Date : 01.14.2019. Issue No: DLS-0000075 Rev.4
Ver.:4 Release Date:01/21/2019 狀態:Approved(正式發行)

## Package Dimensions

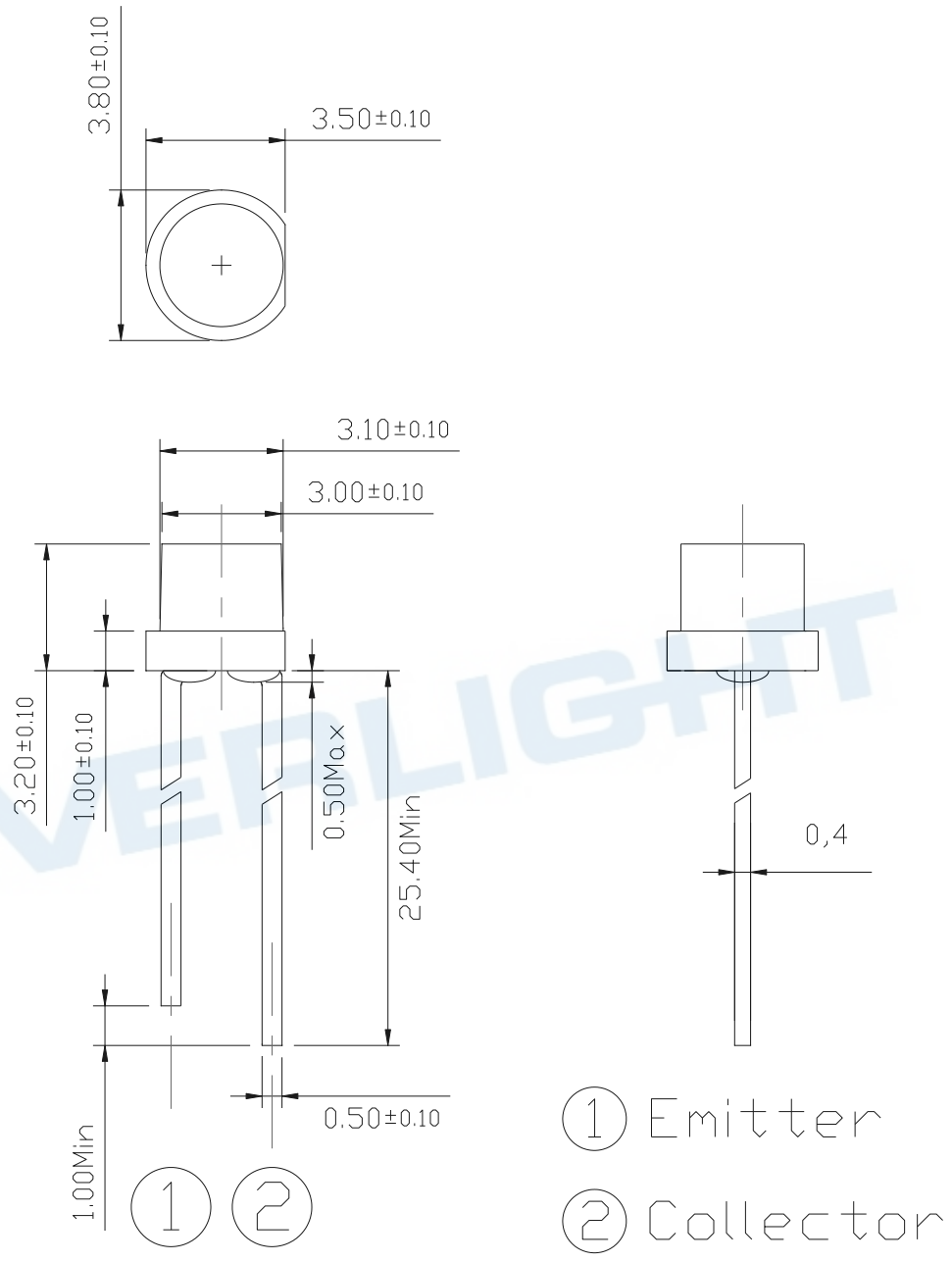


**Notes:** 1.All dimensions are in millimeters
2.Tolerances unless dimensions ±0.1mm


Copyright © 2012, Everlight All Rights Reserved. Release Date : 01.14.2019. Issue No: DLS-0000075 Rev.4
Ver.:4 Release Date:01/21/2019 狀態:Approved(正式發行)

## Absolute Maximum Ratings

| Parameter | Symbol | Rating | Unit |
|---|---|---|---|
| Operating Temperature Range | Topr | -30~85 | °C |
| Storage Temperature Range | Tstg | -30~100 | °C |
| Collector-Emitter Breakdown Voltage | V(BR)CEO | 60 | V |
| Emitter-Collector Breakdown Voltage | V(BR)ECO | 8 | V |
| Supply Voltage | $V_{CC}$ | 2~24 | V |
| Soldering Temperature Range | $T_{sol}$ | 260 | °C |

## Recommended Operating Conditions

| Parameter | Symbol | Min. | Max. | Unit |
|---|---|---|---|---|
| Operating Temperature | Topr | -30 | 85 | °C |
| Supply Voltage | $V_{CC}$ | 3 | 24 | V |

EVERLIGHT


Copyright © 2012, Everlight All Rights Reserved. Release Date : 01.14.2019. Issue No: DLS-0000075 Rev.4

Ver.:4 Release Date:01/21/2019 狀態:Approved(正式發行)

**Electrical and Optical Characteristics ($T_a$=25℃)**

| Parameter | Symbol | MIN. | TYP. | MAX. | Unit | Test Condition |
|---|---|---|---|---|---|---|
| Collector –Emitter Breakdown Voltage | $BV_{CEO}$ | --- | 60 | --- | V | Iceo=500uA |
| Dark Current | $I_{CEO}$ | --- | --- | 0.1 | uA | $V_{CE}$=20V, Ev= 0Lux |
| Collector-Emitter Saturation Voltage | $V_{CE(sat)}$ | --- | --- | 1 | V | $I_C$=50mA, Ev= 1000Lux |
| Light Current | $I_{PH1}$ | 20 | --- | 60 | μA | $V_{CE}$=5V, Ev= 10Lux [Note1] |
| | $I_{PH2}$ | 0.28 | --- | 0.7 | mA | $V_{CE}$=5V, Ev= 100Lux [Note1] |
| | $I_{PH3}$ | --- | 6 | --- | mA | $V_{CE}$=5V, Ev= 100Lux [Note2] |
| Saturation Output Voltage | Vo | --- | 4.7 | --- | V | $V_{CE}$=5V, Ev= 1000Lux $R_L$=2KΩ [Note2] |
| Peak Sensitivity Wavelength | $\lambda_p$ | --- | 790 | --- | nm | --- |
| Sensitivity Wavelength Range | λ | 400 | --- | 1020 | nm | --- |
| Angle of half Sensitivity | $2\theta_{1/2}$ | --- | 110 | --- | Deg. | --- |

**Notice:**

1. White Fluorescent light (Color Temperature = 6500K) is used as light source. However, White LED is substituted in mass production.
2. Illuminance by CIE standard illuminant-A / 2856K, incandescent lamp.


Copyright © 2012, Everlight All Rights Reserved. Release Date : 01.14.2019. Issue No: DLS-0000075 Rev.4

Ver.:4 Release Date:01/21/2019 承認:Approved(正式發行)

## Recommend Application Circuit (ALS)

| Measurement Light Current | Measurement Voltage Output |
|---|---|
| 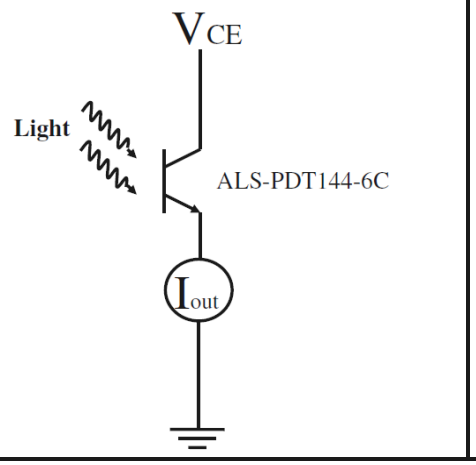 | 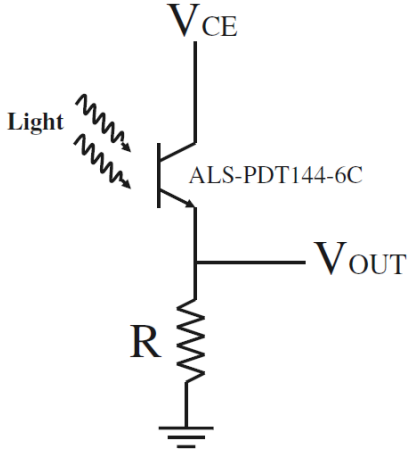 |



## Recommend Application Circuit (CDS)

| For CDS Circuit |
|---|
| 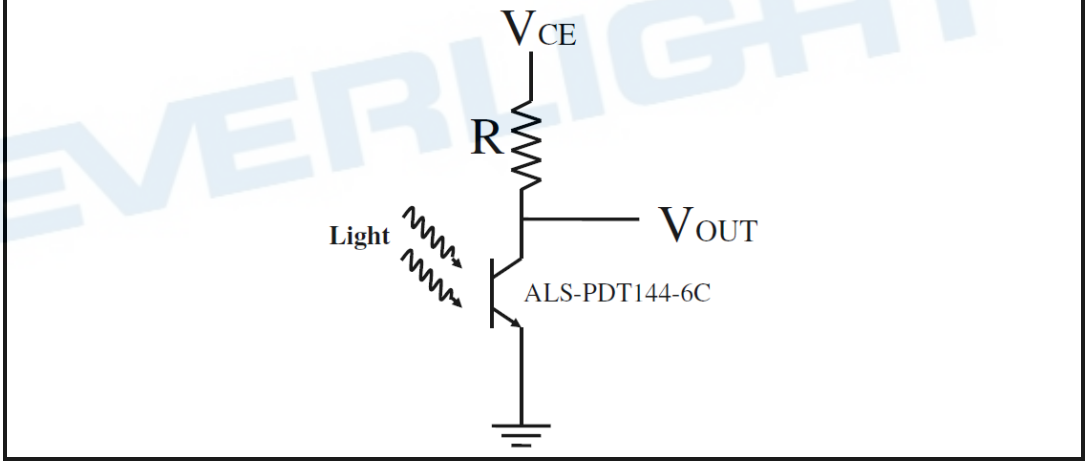 |




Copyright © 2012, Everlight All Rights Reserved. Release Date : 01.14.2019. Issue No: DLS-0000075 Rev.4
Ver.:4 Release Date:01/21/2019 狀態:Approved(正式發行)

## Typical Electrical and Optical Characteristics Curves

### Fig.1 Light Current vs. Illuminance

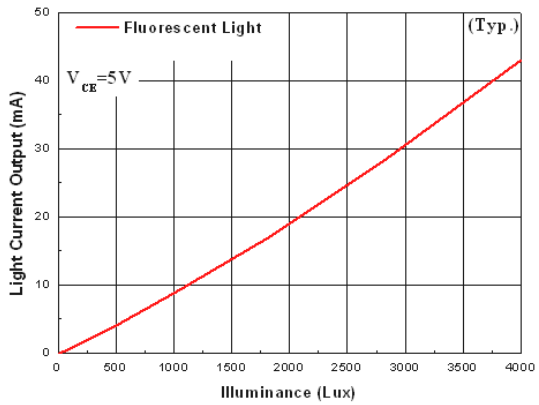


### Fig.2 Dark Current vs. Temperature

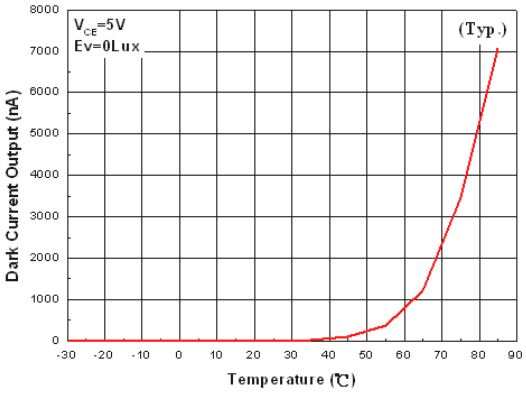


### Fig.3 Light current vs. Temperature

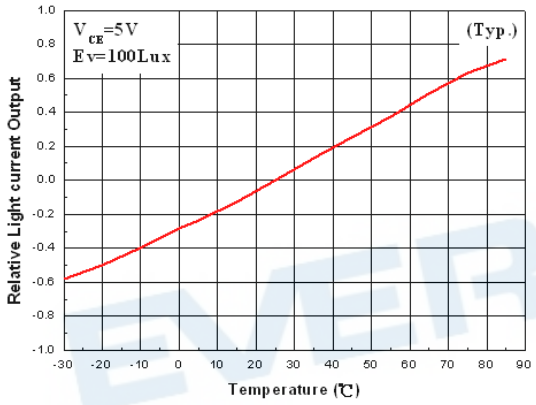


### Fig.4 Light current vs. Supply Voltage

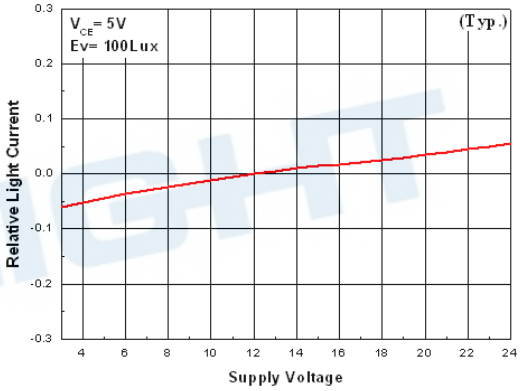


### Fig.5 Spectral Response

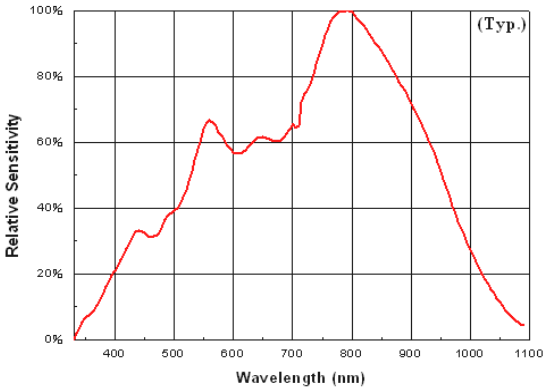


### Fig.6 Voltage Output vs. Illuminance

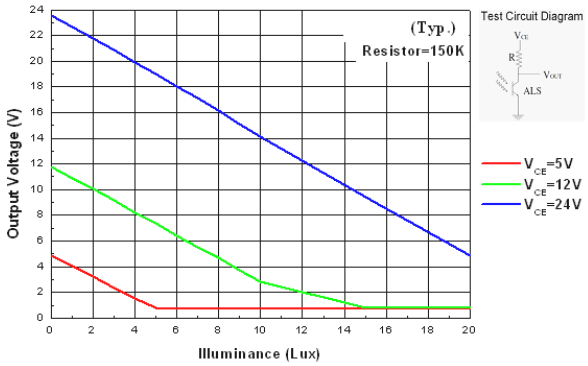



Copyright © 2012, Everlight All Rights Reserved. Release Date : 01.14.2019. Issue No: DLS-0000075 Rev.4

Ver.:4 Release Date:01/21/2019 狀態:Approved(正式發行)

**Fig.7 Relative Intensity vs. Angle Displacement**

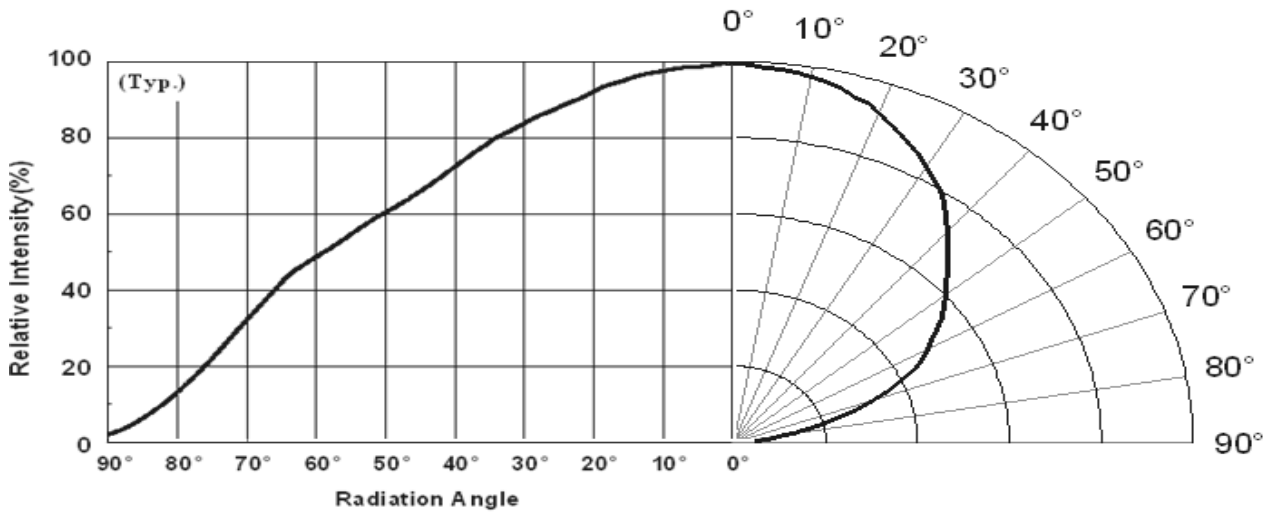


## Packing Quantity Specification

1.1000PCS/1Bag，4Bags/1Box
2.10Boxes/1Carton

## Label Format




CPN: Customer's Production Number
P/N : Production Number
QTY: Packing Quantity
CAT: Ranks
HUE: Peak Wavelength
REF: Reference
LOT No: Lot Number


Copyright © 2012, Everlight All Rights Reserved. Release Date : 01.14.2019. Issue No: DLS-0000075 Rev.4
Ver.:4 Release Date:01/21/2019 狀態:Approved(正式發行)

## DISCLAIMER

1. EVERLIGHT reserves the right(s) on the adjustment of product material mix for the specification.
2. The product meets EVERLIGHT published specification for a period of twelve (12) months from date of shipment.
3. The graphs shown in this datasheet are representing typical data only and do not show guaranteed values.
4. When using this product, please observe the absolute maximum ratings and the instructions for using outlined in these specification sheets. EVERLIGHT assumes no responsibility for any damage resulting from the use of the product which does not comply with the absolute maximum ratings and the instructions included in these specification sheets.
5. These specification sheets include materials protected under copyright of EVERLIGHT. Reproduction in any form is prohibited without obtaining EVERLIGHT's prior consent.
6. This product is not intended to be used for military, aircraft, automotive, medical, life sustaining or life saving applications or any other application which can result in human injury or death. Please contact authorized Everlight sales agent for special application request.

EVERLIGHT


Copyright © 2012, Everlight All Rights Reserved. Release Date : 01.14.2019. Issue No: DLS-0000075 Rev.4
Ver.:4 Release Date:01/21/2019 狀態:Approved(正式發行)