DATASHEET

Photo-link Light Transmitter Unit
PLT133/T10W



Features

- High speed signal transmission（16Mbps NRZ Signal）
- TTL interface compatible
- +3~+5V single power source
- The product itself will remain within RoHS compliant version.
- Compliance with EU REACH
- Compilance Halogen Free(Br<900ppm,Cl<900ppm,Br+Cl<1500ppm)

Description

The opto-electrical component is assembled with a 660nm AlGaInP LED and a driver IC. It transforms the electrical signal to optical signal and be transmitted by 1mm diameter plastic optical fiber.
The component is operated at +3~+5V and has good performance at low dissipation current, steady light output and efficient light coupling.

Applications

- Digital audio equipment
- CD player
- DVD player

Device Selection Guide

Chip		Operating Voltage (Vcc)	Dissipation Current (mA)		Fiber Coupling Light Output (dBm)		
Material	λp(nm)		Typ.	Max.	Min.	Typ.	Max.

Copyright © 2010, Everlight All Rights Reserved. Release Date : 2017.03.16. Issue No: DPL-0000049_Rev.5

AlGaInP	660	+3.0~5.0	5.5	10	-21	---	-15

Absolute Maximum Ratings (Ta=25℃)

Parameter	Symbol	Rating	Unit
Supply Voltage	Vcc	-0.5 to 7	V
DC Input Voltage	Vin	-0.5 to Vcc+0.5	V
Storage Temperature	Tstg	-40 to 85	ºC
Operating Temperature	Topr	-40 to 85	ºC
Soldering Temperature	Tsol	260*	ºC
Human Body Model ESD	HBM	3K	V
Machine Model ESD	MM	300	V

Notes: Soldering time≦10 seconds.

Recommended Operating Conditions

Parameter	Symbol	Conditions	MIN.	TYP.	MAX.	Unit
Supply Voltage	Vcc	-	2.7	3.0	5.50	V

Electro-Optical Characteristics (Ta=25ºC,Vcc=5.0V, 16Mbps)

Parameter	Symbol	Conditions	MIN.	TYP.	MAX.	Unit
Peak Emission Wavelength	λp		640	660	680	nm
Transmission Rate		NRZ Signal	DC	-	16	Mbps
Fiber Coupling Output Power	Pf	* Measuring Method 1	-21	-	-15	dBm
Dissipation Current	Icc	* Measuring Method 1	3	-	10	mA
High Level Input Voltage	Vih		2	-	-	V
Low Level Input Voltage	Vil		-	-	0.8	V
Rise Time	Tr	[1] ; *2 NRZ Code VFLED = 2.0V	-	15	20	ns
Fall Time	Tf		-	15	20	ns
Low to High Delay Time	tpLH	* Measuring Method 2	-	-	100	ns
High to Low Delay Time	tpHL	* Measuring Method 2	-	-	100	ns
Pulse Width Distortion	Δtw	* Measuring Method 2	-15	-	15	ns
Jitter	Δtj	* Measuring Method 2	-	1.5	15	ns

*Note 1 : All Plastic Optical Fiber（980/1000um）

Copyright © 2010, Everlight All Rights Reserved. Release Date : 2017.03.16. Issue No: DPL-0000049_Rev.5

*Circuit Layout Notice:
When power is off, it must be cut off together in Vin and Vcc pin.
If it only has Vcc power-off, LED will sure to be no output power.

Vcc	Vin	LED Condition
2.7~5.5V	High	ON
2.7~5.5V	Low	OFF
2.7~5.5V	FLOATING	ON
FLOATING	0~Vcc	ON

Measuring Method

*1 Measuring method of optical output coupling fiber and dissipation current

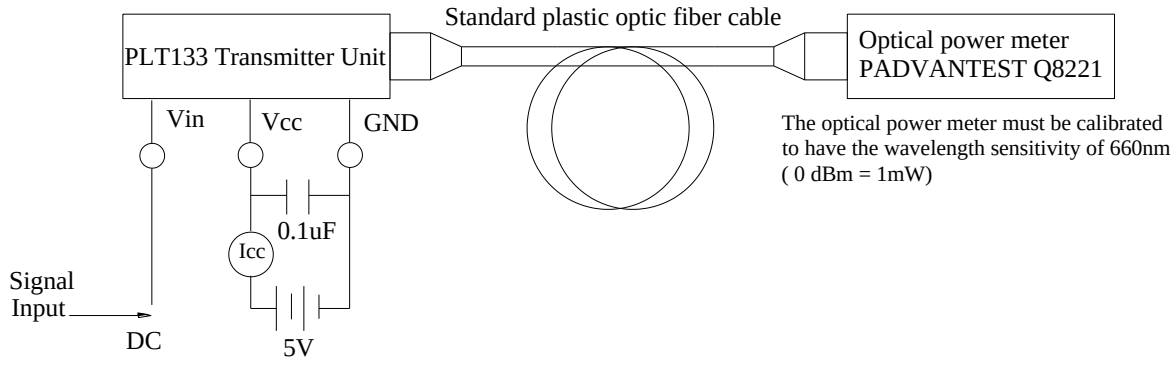

*2 Pulse response measuring method

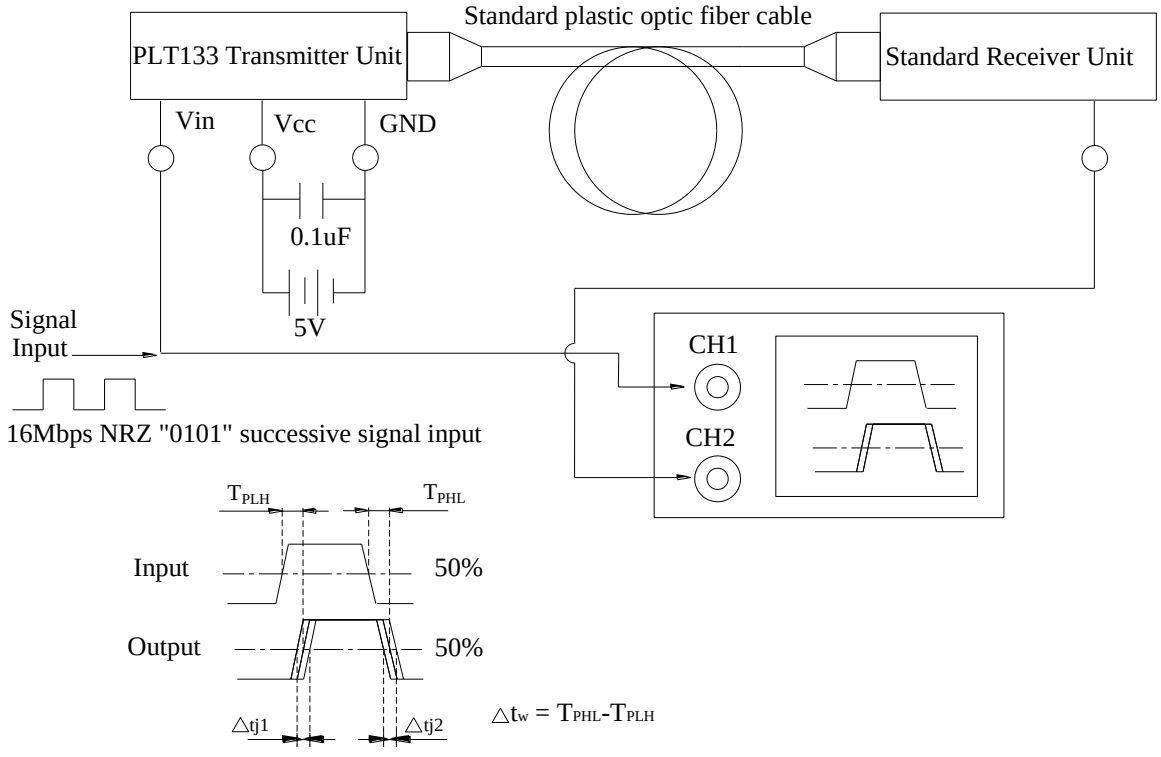

Copyright © 2010, Everlight All Rights Reserved. Release Date : 2017.03.16. Issue No: DPL-0000049_Rev.5

Package Dimension

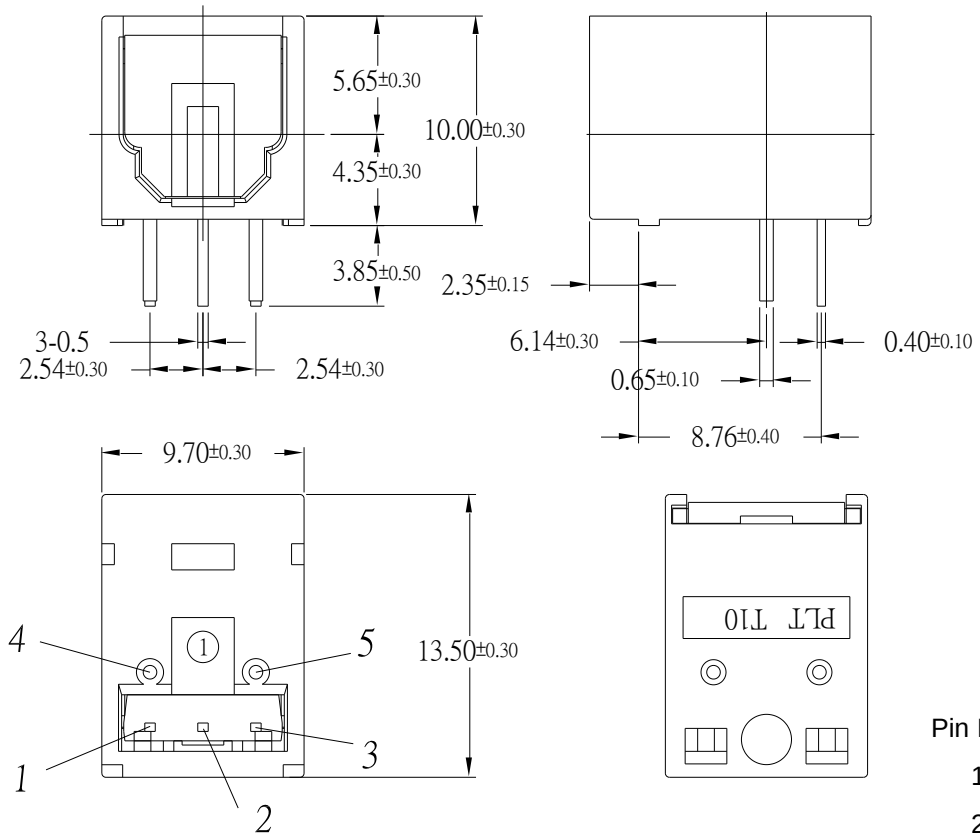

Pin Function:

1.Vin
2.Vcc
3.GND
4.NC
5.NC

Notes:

1.All dimensions are in millimeters.
2.General Tolerance :±0.3mm

Using Method

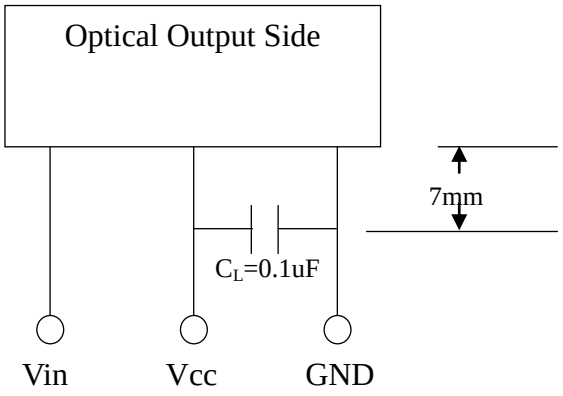

PCB Layout for Electrical Circuit

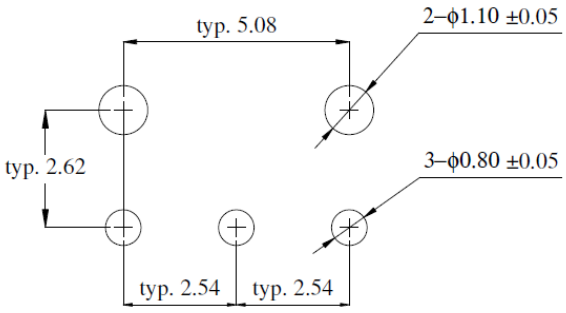

Notes:
1.unit:mm
2.Dimension Tolerance:±0.25mm
3.Substrate Thickness:1.6mm

Copyright © 2010, Everlight All Rights Reserved. Release Date : 2017.03.16. Issue No: DPL-0000049_Rev.5

Label Explanation

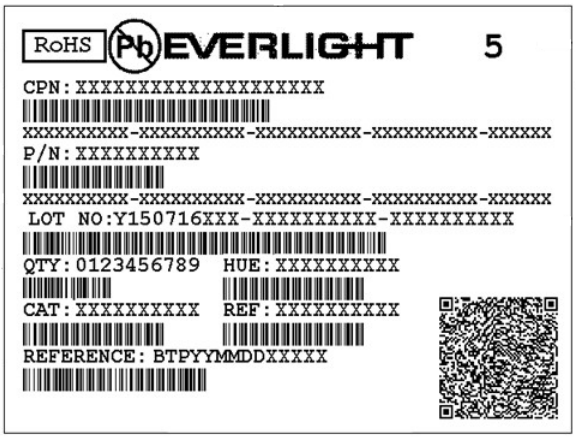

- CPN: Customer's Product Number
- P/N: Product Number
- QTY: Packing Quantity
- CAT: Luminous Intensity Rank
- HUE: Dom. Wavelength Rank
- REF: Forward Voltage Rank
- LOT No: Lot Number
- X: Month
- Reference: Identify Label Number

Packing Quantity Specification

1. 60 pcs/tube
2. 36 tube/Inner box
3. 4 Inner box/Outside box

Copyright © 2010, Everlight All Rights Reserved. Release Date : 2017.03.16. Issue No: DPL-0000049_Rev.5

Notes

1. Above specification may be changed without notice. EVERLIGHT will reserve authority on material change for above specification and reserve the right(s) on the adjustment of product material mix for the specification.
2. The product meets EVERLIGHT published specification for a period of twelve (12) months from date of shipment.
3. The graphs shown in this datasheet are representing typical data only and do not show guaranteed values.
4. When using this product, please observe the absolute maximum ratings and the instructions for using outlined in these specification sheets. EVERLIGHT assumes no responsibility for any damage resulting from the use of the product which does not comply with the absolute maximum ratings and the instructions included in these specification sheets.
5. These specification sheets include materials protected under copyright of EVERLIGHT. Reproduction in any form is prohibited without obtaining EVERLIGHT's prior consent.
6. This product is not intended to be used for military, aircraft, automotive, medical, life sustaining or life saving applications or any other application which can result in human injury or death. Please contact authorized Everlight sales agent for special application request.
7. Statements regarding the suitability of products for certain types of applications are based on Everlight's knowledge of typical requirements that are often placed on Everlight products in generic applications. Such statements are not binding statements about the suitability of products for a particular application. It is the customer's responsibility to validate that a particular product with the properties described in the product specification is suitable for use in a particular application. Parameters provided in datasheets and/or specifications may vary in different applications and performance may vary over time. All operating parameters, including typical parameters, must be validated for each customer application by the customer's technical experts. Product specifications do not expand or otherwise modify Everlight's terms and conditions of purchase, including but not limited to the warranty expressed therein

EVERLIGHT ELECTRONICS CO., LTD.
Office: No 6-8,Zhonghua Rd., Shulin Dist.,
New Taipei City 23860, Taiwan, R.O.C

Tel: 886-2-2685-6688
Fax: 886-2-2685-6897
http://www.everlight.com

Copyright © 2010, Everlight All Rights Reserved. Release Date : 2017.03.16. Issue No: DPL-0000049_Rev.5

Mouser Electronics

Authorized Distributor

Click to View Pricing, Inventory, Delivery & Lifecycle Information:

Everlight:
PLT133/T10W