| | |
|---|---|
| $V_{DSS}$ | 100 V |
| $I_D$ | 100 A |
| $R_{DS(ON)}$ | 5.9 mΩ |

## FEATURES

- Ultra-low $R_{DS(ON)}$
- Low Gate Charge
- 100% UIS Tested, 100% $R_g$ Tested
- Pb-free Lead Plating
- Halogen-free and RoHS-compliant




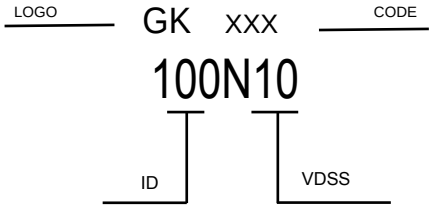


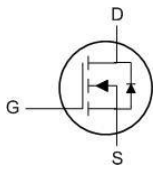


**Schematic Diagram**

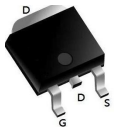


**TO-252 top view**

## MAXIMUM RATINGS AND ELECTRICAL CHARACTERISTICS

### Absolute Maximum Ratings

| Parameter | | Symbol | Value | Unit |
|---|---|---|---|---|
| Drain-to-Source Voltage | | $V_{DS}$ | 100 | V |
| Gate-to-Source Voltage | | $V_{GS}$ | ±20 | V |
| Continuous Drain Current (1) | $T_C$ = 25°C | $I_D$ | 100 | A |
| | $T_C$ = 100°C | | 52 | |
| Pulsed Drain Current (2) | | $I_{DM}$ | 246 | A |
| Avalanche Current (3) | | $I_{AS}$ | 42 | A |
| Avalanche Energy (3) | | $E_{AS}$ | 88 | mJ |
| Power Dissipation (4) | $T_C$ = 25°C | $P_D$ | 104 | W |
| | $T_C$ = 100°C | | 42 | |
| Junction & Storage Temperature Range | | $T_J$, $T_{STG}$ | -55 to 150 | °C |

## Electrical characteristics ($T_J$=25℃ unless otherwise noted)

| Parameter | Symbol | Conditions | Min. | Typ. | Max. | Unit |
|---|---|---|---|---|---|---|
| **STATIC PARAMETERS** | | | | | | |
| Drain-Source Breakdown Voltage | $V_{(BR)DSS}$ | $I_D$ = 250μA, $V_{GS}$ = 0V | 100 | | | V |
| Zero Gate Voltage Drain Current | $I_{DSS}$ | $V_{DS}$ = 80V, $V_{GS}$ = 0V | | | 1.0 | μA |
| | | $T_J$ = 55°C | | | 5.0 | |
| Gate-Body Leakage Current | $I_{GSS}$ | $V_{DS}$ = 0V, $V_{GS}$ = ±20V | | | ±100 | nA |
| Gate Threshold Voltage | $V_{GS(th)}$ | $V_{DS}$ = $V_{GS}$, $I_D$ = 250μA | 1.2 | 1.7 | 2.5 | V |
| Static Drain-Source ON-Resistance | $R_{DS(ON)}$ | $V_{GS}$ = 10V, $I_D$ = 20A | | 5.9 | 8.1 | mΩ |
| Static Drain-Source ON-Resistance | $R_{DS(ON)}$ | $V_{GS}$ = 4.5V, $I_D$ = 15A | | 7.8 | 12.0 | mΩ |
| Forward Transconductance | $g_{FS}$ | $V_{DS}$ = 5V, $I_D$ = 20A | | 82 | | S |
| Diode Forward Voltage | $V_{SD}$ | $I_S$ = 1A, $V_{GS}$ = 0V | | 0.71 | 1.0 | V |
| Diode Continuous Current | $I_S$ | $T_C$ = 25°C | | | 104 | A |
| | | | | | | |
| **DYNAMIC PARAMETERS** (5) | | | | | | |
| Input Capacitance | $C_{iss}$ | $V_{GS}$ = 0V, $V_{DS}$ = 50V, f = 1MHz | | 2360 | | pF |
| Output Capacitance | $C_{oss}$ | | | 368 | | pF |
| Reverse Transfer Capacitance | $C_{rss}$ | | | 5.9 | | pF |
| Gate Resistance | $R_g$ | $V_{GS}$ = 0V, $V_{DS}$= 0V, f = 1MHz | | 1.7 | | Ω |
| | | | | | | |
| **SWITCHING PARAMETERS** (5) | | | | | | |
| Total Gate Charge (@$V_{GS}$ = 10V) | $Q_g$ | $V_{GS}$ = 0 to 10V<br>$V_{DS}$ = 75V, $I_D$ = 20A | | 34 | | nC |
| Total Gate Charge (@$V_{GS}$ = 6.0V) | $Q_g$ | | | 16.8 | | nC |
| Gate Source Charge | $Q_{gs}$ | | | 5.4 | | nC |
| Gate Drain Charge | $Q_{gd}$ | | | 5.7 | | nC |
| Turn-On DelayTime | $t_{D(on)}$ | $V_{GS}$ = 10V, $V_{DS}$ = 75V<br>$R_L$ = 3.75Ω, $R_{GEN}$ = 6Ω | | 8.4 | | ns |
| Turn-On Rise Time | $t_r$ | | | 12.2 | | ns |
| Turn-Off DelayTime | $t_{D(off)}$ | | | 43 | | ns |
| Turn-Off Fall Time | $t_f$ | | | 18.9 | | ns |
| Body Diode Reverse Recovery Time | $t_{rr}$ | $I_F$ = 15A, $dI_F/dt$ = 100A/μs | | 49 | | ns |
| Body Diode Reverse Recovery Charge | $Q_{rr}$ | $I_F$ = 15A, $dI_F/dt$ = 100A/μs | | 43 | | nC |

### Thermal Performance

| Parameter | Symbol | Typ. | Max. | Unit |
|---|---|---|---|---|
| Thermal Resistance, Junction-to-Ambient | $R_{\theta JA}$ | 40 | 48 | °C/W |
| Thermal Resistance, Junction-to-Case | $R_{\theta JC}$ | 0.90 | 1.2 | °C/W |

**Notes:**

1. Computed continuous current assumes the condition of $T_{J_Max}$ while the actual continuous current depends on the thermal & electro-mechanical application board design.
2. This single-pulse measurement was taken under $T_{J_Max}$ = 150°C.
3. This single-pulse measurement was taken under the following condition [L = 100μH, $V_{GS}$ = 10V, $V_{DD}$ = 50V] while its value is limited by $T_{J_Max}$ = 150°C.
4. The power dissipation $P_D$ is based on $T_{J_Max}$ = 150°C.
5. This value is guaranteed by design hence it is not included in the production test.

## RATING AND CHARACTERISTIC CURVES

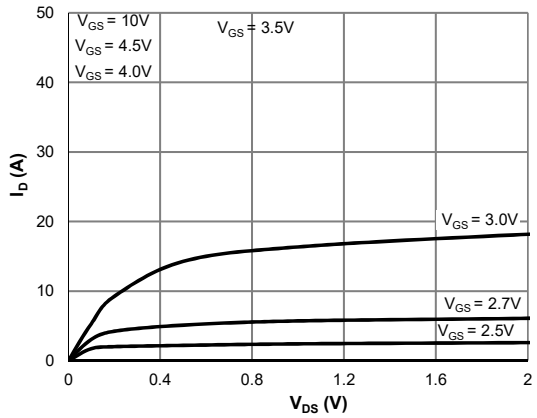


Figure 1: Saturation Characteristics

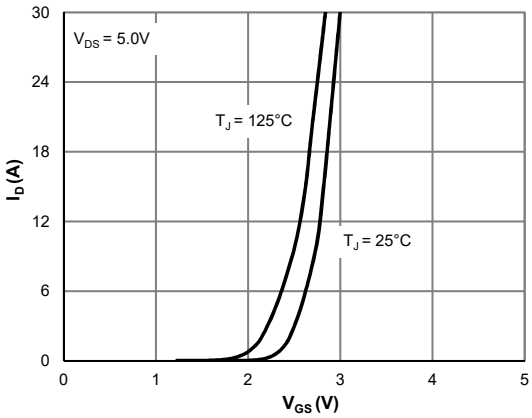


Figure 2: Transfer Characteristics

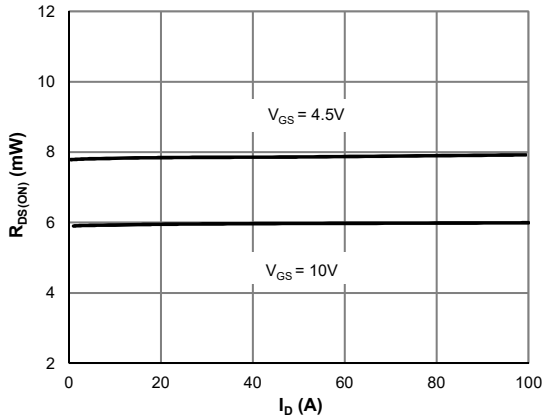


Figure 3: $R_{DS(ON)}$ vs. Drain Current

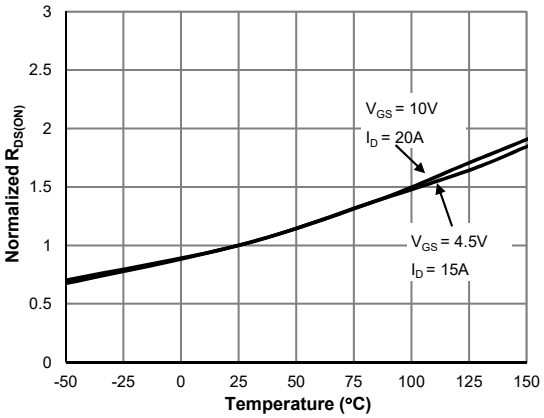


Figure 4: $R_{DS(ON)}$ vs. Junction Temperature

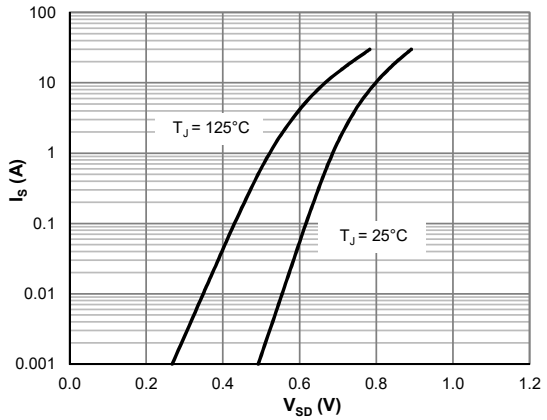


Figure 5: Body-Diode Characteristics

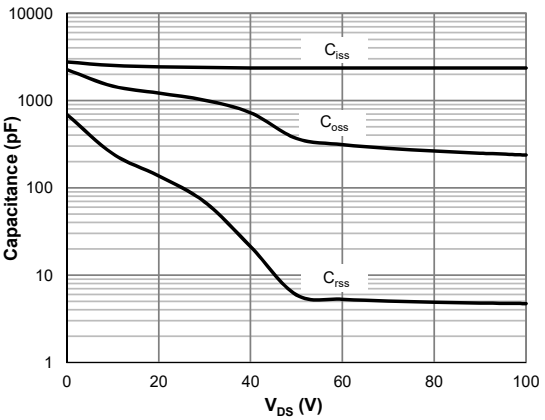


Figure 6: Capacitance Characteristics

## RATING AND CHARACTERISTIC CURVES

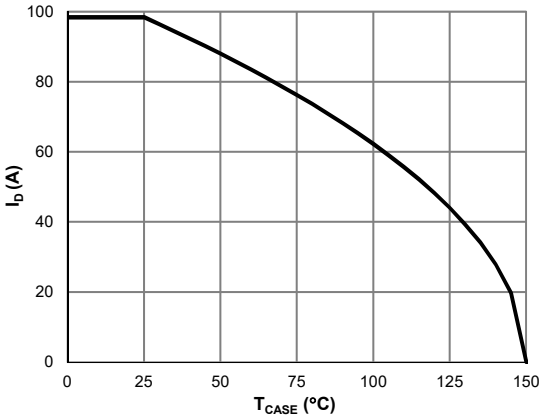


**Figure 7: Current De-rating**

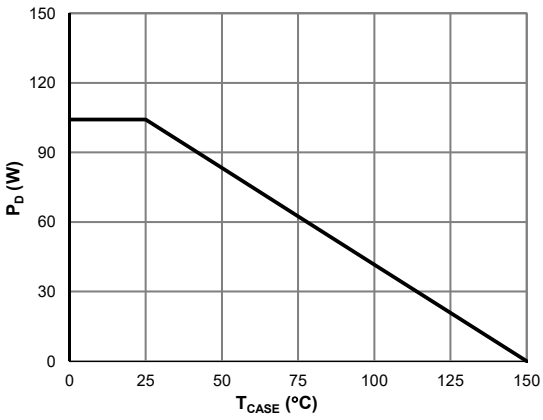


**Figure 8: Power De-rating**

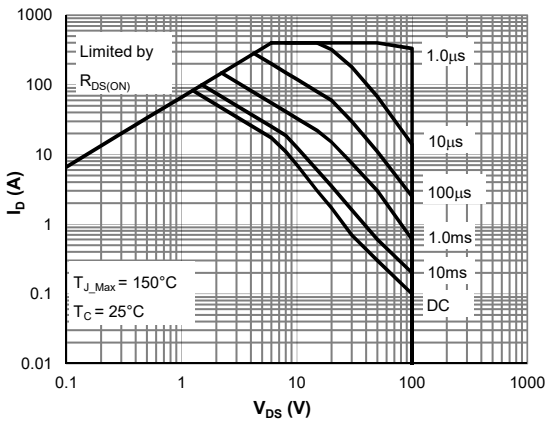


**Figure 9: Maximum Safe Operating Area**

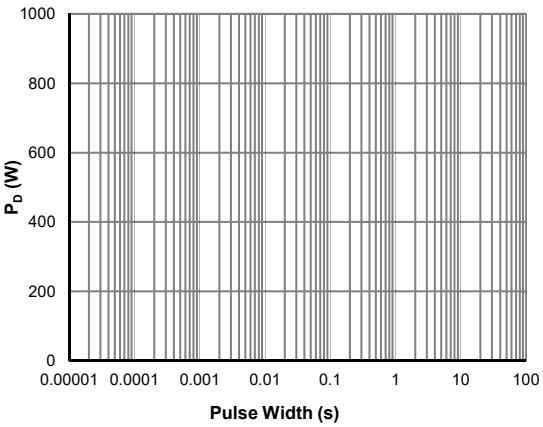


**Figure 10: Single Pulse Power Rating, Junction-to-Case**

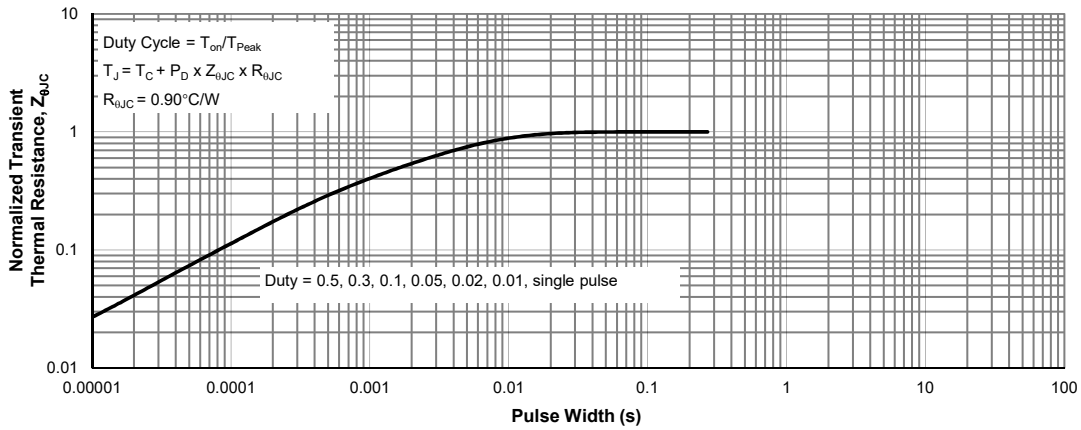


**Figure 11: Normalized Maximum Transient Thermal Impedance**

## Soldering parameters

| Reflow Condition | | Pb-Free assembly (see as bellow) |
|---|---|---|
| Pre Heat | -Temperature Min ($T_{s(min)}$) | +150℃ |
| | -Temperature Max($T_{s(max)}$) | +200℃ |
| | -Time (Min to Max) (ts) | 60-180 secs. |
| Average ramp up rate (Liquid us Temp ($T_L$) to peak) | | 3℃/sec. Max |
| $T_{s(max)}$ to $T_L$ - Ramp-up Rate | | 3℃/sec. Max |
| Reflow | -Temperature($T_L$)(Liquid us) | +217℃ |
| | -Temperature($t_L$) | 60-150 secs. |
| Peak Temp ($T_p$) | | +260(+0/-5)℃ |
| Time within 5℃ of actual Peak Temp ($t_p$) | | 30 secs. Max |
| Ramp-down Rate | | 6℃/sec. Max |
| Time 25℃ to Peak Temp ($T_P$) | | 8 min. Max |
| Do not exceed | | +260℃ |

**FIG5:** Reflow condition

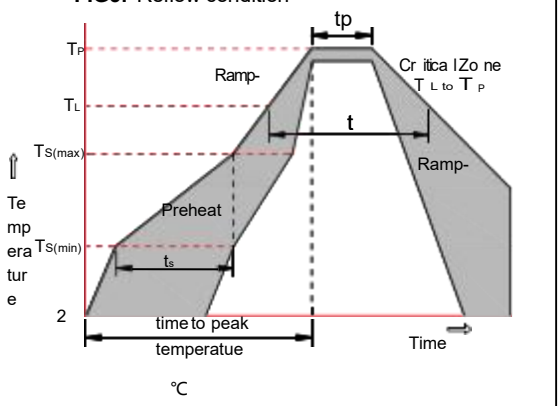


## Package Dimensions & Suggested Pad Layout

TO-252

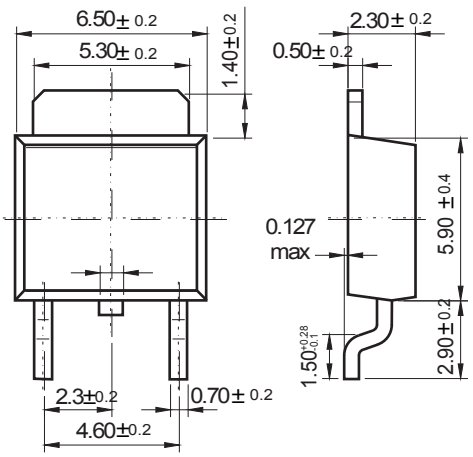


Dimensions in inches and (millimeters)

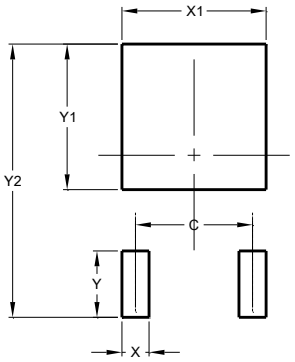


| Dimensions | Value (in mm) |
|---|---|
| C | 4.55 |
| X | 1.50 |
| X1 | 5.80 |
| Y | 2.70 |
| Y1 | 6.00 |
| Y2 | 10.90 |

## Tape & rell specification

Tape

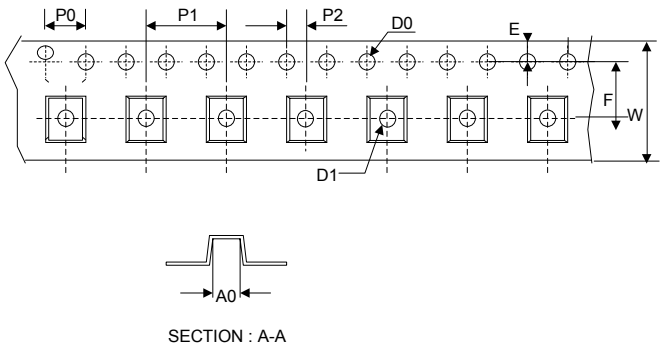


| Symbol | Dimension (mm) |
|---|---|
| P0 | 4.00±0.20 |
| P1 | 8.00±0.20 |
| P2 | 2.00±0.20 |
| D0 | 1.55±0.15 |
| D1 | 1.55±0.20 |
| E | 1.75±0.20 |
| F | 7.50±0.20 |
| W | 16.00±0.20 |
| A0 | 7.10±0.20 |
| B0 | 10.50±0.20 |
| K0 | 2.70±0.20 |
| T | 0.30±0.10 |

13” Reel

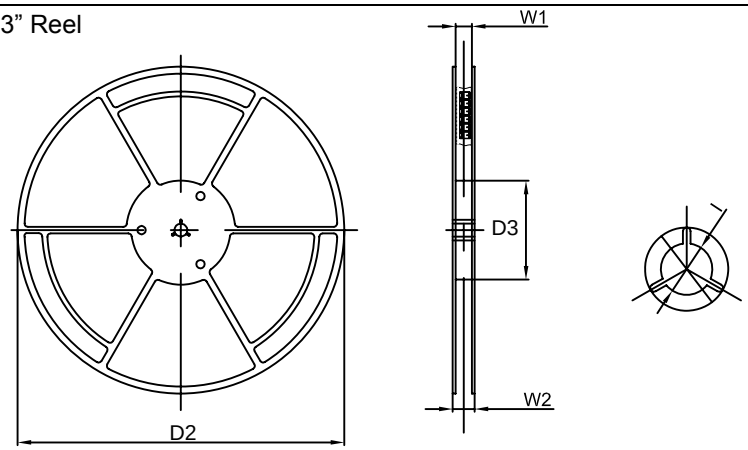


| | |
|---|---|
| D2 | 330.0±5.0 |
| D3 | 100.0±4.0 |
| W1 | 20.0±5.0 |
| W2 | 25.0±5.0 |
| I | 13.0±2.0 |

Quantity: 2500PCS