Note: This datasheet may be out of date.
Please download the latest datasheet of CSTCE8M00G55Z-R0 from the official website of Murata Manufacturing Co., Ltd.

http://www.murata.com/en-gb/products/productdetail?partno=CSTCE8M00G55Z-R0

CSTCE8M00G55Z-R0

Discontinued RoHS REACH

Appearance & Shape



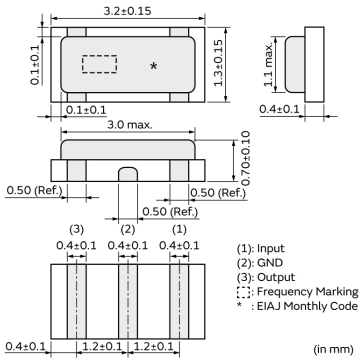

Features

MURATA's package technology expertise has enabled the development of the Chip CERALOCK(R) with built-in load capacitors.
High-density mounting is made possible by the small package and the elimination of the need for an external load capacitor.

Features
1. Oscillation circuits do not require external load capacitors.
2. Available for a wide frequency range.
3. Extremely small and have a low profile.
4. No adjustment is necessary for oscillation circuits.
5. Available for a wide temperature range.

Applications

Other Usage	Consumer/Industrial

Packaging Information

Packaging	Specifications	Standard Packing Quantity
R0	180mm Embossed Tape	3000

Attention
1.This datasheet is downloaded from the website of Murata Manufacturing Co., Ltd. Therefore, it's specifications are subject to change or our products in it may be discontinued without advance notice. Please check with our sales representatives or product engineers before ordering.
2.This datasheet has only typical specifications because there is no space for detailed specifications.
Therefore, please review our product specifications or consult the approval sheet for product specifications before ordering.

Note: This datasheet may be out of date.
Please download the latest datasheet of CSTCE8M00G55Z-R0 from the official website of Murata Manufacturing Co., Ltd.

http://www.murata.com/en-gb/products/productdetail?partno=CSTCE8M00G55Z-R0

CSTCE8M00G55Z-R0

Specifications

Product Type	Ceramic Resonator (CERALOCK)
Series	CSTCE_G
Frequency	8.000MHz
Frequency Tolerance	+/-0.50% max.
Operating Temperature Range	-40℃~125℃
Frequency Shift by Temperature	+/-0.20% max.
Frequency Aging	+/-0.10% max.
Resonant Impedance (R1)	40ohm max.
Built-in Load Capacitance (CL1/CL2)	33pF
Shape	SMD
Wash	Not available
L x W (size)	3.2x1.3mm
Mass	11mg

Attention
1.This datasheet is downloaded from the website of Murata Manufacturing Co., Ltd. Therefore, it's specifications are subject to change or our products in it may be discontinued without advance notice. Please check with our sales representatives or product engineers before ordering.
2.This datasheet has only typical specifications because there is no space for detailed specifications.
Therefore, please review our product specifications or consult the approval sheet for product specifications before ordering.