REV.	EC#	DESCRIPTION	DATE	DRAWN	CHECK	APPROVED
1.00		初版发行	2020-05-22			

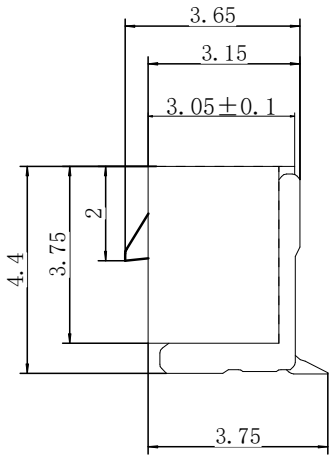

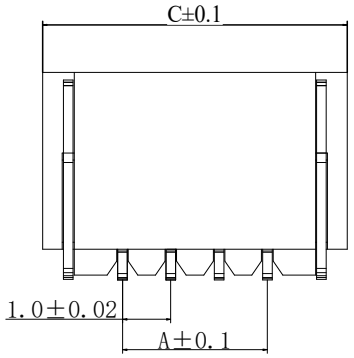

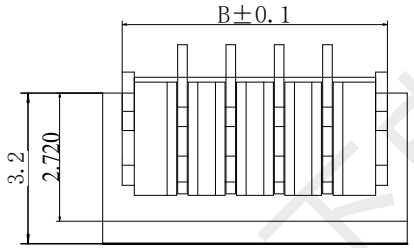

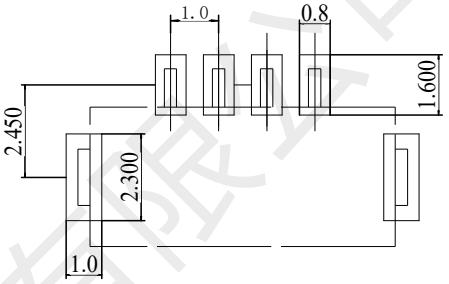

PCB LAYOUT

1.0立式贴片	A-(mm)	B-(mm)	C-(mm)
1.0-2PLT	1.00mm	3.50mm	4.30mm
1.0-3PLT	2.00mm	4.50mm	5.30mm
1.0-4PLT	3.00mm	5.50mm	6.30mm
1.0-5PLT	4.00mm	6.50mm	7.30mm
1.0-6PLT	5.00mm	7.50mm	8.30mm
1.0-7PLT	6.00mm	8.50mm	9.30mm
1.0-8PLT	7.00mm	9.50mm	10.30mm
1.0-9PLT	8.00mm	10.50mm	11.30mm
1.0-10PLT	9.00mm	11.50mm	12.30mm
1.0-11PLT	10.00mm	12.50mm	13.30mm
1.0-12PLT	11.00mm	13.50mm	14.30mm
1.0-13PLT	12.00mm	14.50mm	15.30mm
1.0-14PLT	13.00mm	15.50mm	16.30mm
1.0-15PLT	14.00mm	16.50mm	17.30mm
1.0-16PLT	15.00mm	17.50mm	18.30mm
1.0-17PLT	16.00mm	18.50mm	19.30mm
1.0-18PLT	17.00mm	19.50mm	20.30mm
1.0-19PLT	18.00mm	20.50mm	21.30mm
1.0-20PLT	19.00mm	21.50mm	22.30mm

技术要求:
1) 材质:见附表;
2) 电镀:见附表;
3) 塑件表面平整、光洁、无毛刺、气泡、烧焦、变形、浇口无拉伤、多料或缺料等不良现象;
4) 端子表面无氧化、电镀无不良现象。

适应基板厚度：1.2mm~1.6mm
温度范围：-25℃~85℃
额定电压：50V AC/DC
额定电流：1A
接触电阻：≤0.02Ω
绝缘电阻：≥100MΩ
耐　压：500V AC/minute

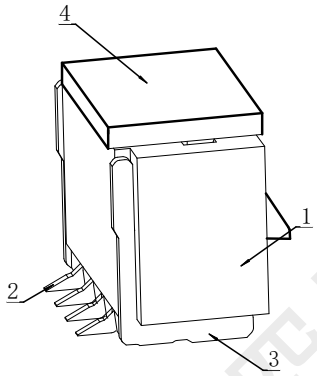

NO.	NAME	Q'TY	DESCRIPTION
4	Cap	1 PCS	材质:LCP (UL94V-0),颜色:本色或黑色
3	FITTING NAIL	2 PCS	材质:磷青铜,电镀:镀亮锡60u"MIN
2	PIN	n PCS	材质:磷青铜,电镀:镀亮锡60u"MIN
1	Housing	1 PCS	材质:LCP (UL94V-0),颜色:本色或黑色

GENERAL TOLERANCES			
DIM	TOL	DIM	DEG
X.		X°.	±3.00°
X.X	±0.35	X.X°	±2.00°
X.XX	±0.25	X.XX°	±1.00°
X.XXX	±0.15	X.XXX°	

深圳市韩下电子有限公司

DRAW :	黄彬	2020-05-22	TITLE: 针座	DRAW NAME: HX 1.0-4P LTDK
DESIGN:				
CHECK:	张伟	2020-05-22	SERIES: SH1.0K SERIES	DRAW NO.
APPROVED	罗小春	2020-05-22	P/N:	
CUSTOMER DRAWING			REV. 1.00 / SCALE N/A	UNIT: mm / SHEET: 1/1