LMR3650x 3V 至 65V、100mA 和 150mA 宽 V_{IN} 同步降压转换器（针对尺寸和轻负载效率进行了优化）

1 特性

- 提供功能安全
  - 可提供用于功能安全系统设计的文档
- 专用于条件严苛的工业应用：
  - 结温范围：–40°C 至 +150°C
  - 高达 70V 的输入瞬态保护
  - 宽输入电压范围：3.0V（下降阈值）至 65V
  - 超低开关节点振铃以降低 EMI
  - 提供可调和固定输出 3.3V 和 5V 电压选项
- 适用于可扩展的工业电源：
  - 引脚与 LMR36503（65V，300mA）和 LMR36506（65V，600mA）兼容
  - 可调开关频率：200kHz 至 2.2MHz（采用 RT 引脚型号时）
- 减小了解决方案尺寸并降低了成本：
  - 超小型 2mm x 2mm HotRod™ 封装
- 在整个负载范围内具有高效率和低功率耗散：
  - 1MHz 时峰值效率大于 80%（3.3V V_{OUT}）

2 应用

- 工厂自动化：现场发送器和过程传感器
- 楼宇自动化：HVAC 和防火安全通知及探测器
- 电器：园艺和电动工具
- 便携式电子产品：耳机和耳塞

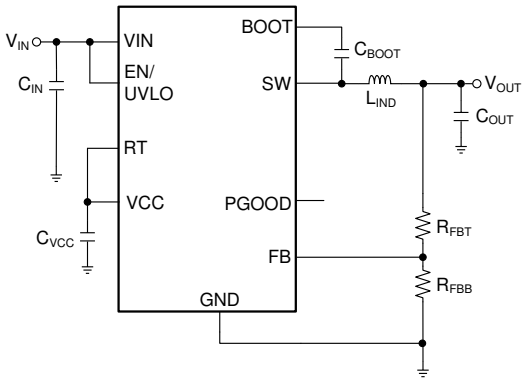

简化原理图

3 说明

LMR3650x 是业内超小型 65V、150mA、100mA 同步直流/直流降压转换器，采用 4mm² HotRod 封装。这款易于使用的转换器可处理高达 70V 的输入电压瞬变，提供出色的 EMI 性能，并支持固定、3.3V、5V 和其他可调输出电压。

LMR3650x 采用具有内部补偿的峰值电流模式控制架构，用于维持稳定运行和超小的输出电容。LMR3650x 在 RT 引脚与地之间选用合适的电阻器后，可通过外部编程在 200kHz 至 2.2MHz 的宽范围内实现理想的开关频率。借助精密 EN/UVLO 功能，可对器件启动和关断进行精确控制。附带内置干扰滤波器和延迟释放功能的 PGOOD 标志可提供系统状态的真实指示，免去了使用外部电压监控器的麻烦。LMR3650x 紧凑的解决方案尺寸和丰富的功能集简化了各种工业应用的实施。

器件信息

器件型号	封装 (1)	封装尺寸（标称值）
LMR36501	RPE（VQFN-HR，9）	2.00mm × 2.00mm
LMR36502	RPE（VQFN-HR，9）	2.00mm × 2.00mm

(1) 如需了解所有可用封装，请参阅数据表末尾的可订购产品附录。

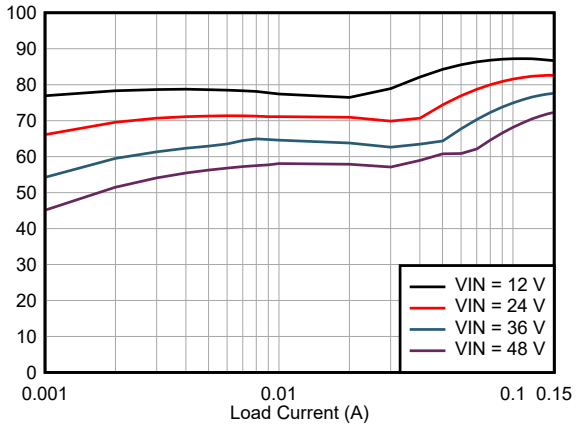

效率与输出电流间的关系
V_{OUT} = 3.3V（固定值），1MHz，AUTO

本文档旨在为方便起见，提供有关 TI 产品中文版本的信息，以确认产品的概要。有关适用的官方英文版本的最新信息，请访问 www.ti.com，其内容始终优先。TI 不保证翻译的准确性和有效性。在实际设计之前，请务必参考最新版本的英文版本。

Table of Contents

1 特性 1
2 应用 1
3 说明 1
4 Revision History 2
5 Device Comparison Table 3
6 Pin Configuration and Functions 4
7 Specifications 5
7.1 Absolute Maximum Ratings 5
7.2 ESD (Commercial) Ratings 5
7.3 Recommended Operating Conditions 5
7.4 Thermal Information 6
7.5 Electrical Characteristics 6
7.6 System Characteristics 9
7.7 Typical Characteristics 10
8 Detailed Description 11
8.1 Overview 11
8.2 Functional Block Diagram 12
8.3 Feature Description 13
8.4 Device Functional Modes 20
9 Application and Implementation 26
9.1 Application Information 26
9.2 Typical Application 27
9.3 Best Design Practices 36
9.4 Power Supply Recommendations 36
9.5 Layout 36
10 Device and Documentation Support 39
10.1 Device Support 39
10.2 Documentation Support 39
10.3 接收文档更新通知 39
10.4 支持资源 39
10.5 Trademarks 39
10.6 静电放电警告 40
10.7 术语表 40
11 Mechanical, Packaging, and Orderable Information 41

4 Revision History

注：以前版本的页码可能与当前版本的页码不同

Changes from Revision * (March 2023) to Revision A (May 2023)	Page
• 包含了功能安全要点	1
• 删除了有关超高功率密度的要点	1
• 删除了 LMR36501 的预发布说明	1
• 将*说明*部分的引用更改为 100mA 器件	1
• 将效率图更新为 AUTO 模式运行	1
• Included LMR36502FS5RPER	3
• Included LMR36502P3RPER	3
• Included LMR36502PS5RPER	3
• Included LMR36501F3RPER	3
• Included LMR36501F5RPER	3
• Included LMR36501P3RPER	3
• Included LMR36501P5RPER	3
• Corrected LMR36501F5RPE to LMR36501F5RPE*R* to signify the reel information	3
• Corrected LMR36502F3RPE to LMR36502F3RPE*R* to signify the reel information	3
• Removed preview note from LMR36501F5RPE	3
• Removed preview note from 100-mA current limits	5
• Corrected frequency from 1.1 MHz to 1 MHz when RT is tied to Vcc	14

Copyright © 2023 Texas Instruments Incorporated

5 Device Comparison Table

ORDERABLE PART NUMBER (1)	RATED CURRENT	OUTPUT VOLTAGE	EXTERNAL SYNC	F_{SW}	SPREAD SPECTRUM
LMR36501P3RPER	100 mA	Fixed 3.3-V / Adjustable	No (Default PFM at light load)	Adjustable with RT resistor	No
LMR36501P5RPER	100 mA	Fixed 5-V / Adjustable	No (Default PFM at light load)	Adjustable with RT resistor	No
LMR36501F3RPER	100 mA	Fixed 3.3-V / Adjustable	No (Default FPWM at light load)	Adjustable with RT resistor	No
LMR36501F5RPER	100 mA	Fixed 5-V / Adjustable	No (Default FPWM at light load)	Adjustable with RT resistor	No
LMR36502P3RPER	150 mA	Fixed 3.3-V / Adjustable	No (Default PFM at light load)	Adjustable with RT resistor	No
LMR36502PS5RPER	150 mA	Fixed 5-V / Adjustable	No (Default FPWM at light load)	Adjustable with RT resistor	Yes
LMR36502F3RPER	150 mA	Fixed 3.3-V / Adjustable	No (Default FPWM at light load)	Adjustable with RT resistor	No
LMR36502FS5RPER	150 mA	Fixed 5-V / Adjustable	No (Default FPWM at light load)	Adjustable with RT resistor	Yes

(1) For more information on device orderable part numbers, see 节 10.1.1. Contact TI for details and availability of other device options.

Copyright © 2023 Texas Instruments Incorporated

6 Pin Configuration and Functions

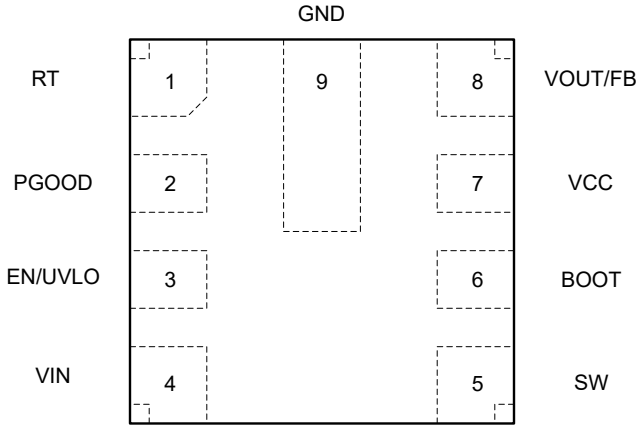

图 6-1. 9-Pin (2 mm × 2 mm) VQFN-HR RPE Package (Top View)

表 6-1. Pin Functions

PIN		I/O	DESCRIPTION
NO.	NAME		
1	RT	A	The switching frequency can be adjusted from 200 kHz to 2.2 MHz by selecting the appropriate valued resistor from this pin to GND. See 节 8.3.2 for more details. *Do not float this pin.*
2	PGOOD	A	Open-drain power-good flag output. Connect to suitable voltage supply through a current limiting resistor. High = power OK, low = power bad. This pin goes low when EN = low. This pin can be open or grounded when not used.
3	EN/UVLO	A	Enable input to regulator. High = ON, Low = OFF. Can be connected directly to VIN. *Do not float this pin.*
4	VIN	P	Input supply to regulator. Connect a high-quality bypass capacitor or capacitors directly to this pin and GND.
5	SW	P	Regulator switch node. Connect to power inductor.
6	BOOT	P	Bootstrap supply voltage for internal high-side driver. Connect a high-quality 0.1-μF capacitor from this pin to the SW pin.
7	VCC	P	Internal LDO output. Used as supply to internal control circuits. Do not connect to external loads. Can be used as logic supply for power-good flag. Connect a high-quality 1-μF capacitor from this pin to GND.
8	VOUT/FB	A	Fixed output options and adjustable output options are available with the VOUT/FB pin variant. Connect to the output voltage node for fixed V_{OUT}. Connect to tap point of feedback voltage divider for adjustable VOUT. See *Output Voltage Selection* for how to select feedback resistor divider values. Check *Device Comparison Table* for more details. *Do not float this pin.*
9	GND	G	Power ground terminal. Connect to system ground. Connect to C_{IN} with short, wide traces.
A = Analog, P = Power, G = Ground			

Copyright © 2023 Texas Instruments Incorporated

7 Specifications

7.1 Absolute Maximum Ratings

Over the recommended operating junction temperature range (1)

PARAMETER		MIN	MAX	UNIT
Voltage	VIN to GND	–0.3	70	V
	EN to GND	–0.3	70	V
	SW to GND	–0.3	70.3	V
	PGOOD to GND	0	20	V
	VOUT/FB to GND	–0.3	16	V
	BOOT to SW	–0.3	5.5	V
	VCC to GND	–0.3	5.5	V
	RT to GND (RT variant)	–0.3	5.5	V
	MODE/SYNC to GND (MODE/SYNC variant)	–0.3	5.5	V
T_J	Junction temperature	–40	150	°C
T_{stg}	Storage temperature	–65	150	°C

(1) Operation outside the Absolute Maximum Ratings may cause permanent device damage. Absolute Maximum Ratings do not imply functional operation of the device at these or any other conditions beyond those listed under Recommended Operating Conditions. If used outside the Recommended Operating Conditions but within the Absolute Maximum Ratings, the device may not be fully functional, and this may affect device reliability, functionality, performance, and shorten the device lifetime.

7.2 ESD (Commercial) Ratings

			VALUE	UNIT
$V_{(ESD)}$	Electrostatic discharge	Human-body model (HBM), per ANSI/ESDA/JEDEC JS-001 (1)	±2000	V
		Charged-device model (CDM), per ANSI/ESDA/JEDEC JS-002 (2)	±750	V

(1) JEDEC document JEP155 states that 500-V HBM allows safe manufacturing with a standard ESD control process
(2) JEDEC document JEP157 states that 250-V CDM allows safe manufacturing with a standard ESD control process.

7.3 Recommended Operating Conditions

Over the recommended operating junction temperature range of –40°C to 150°C (unless otherwise noted) (1) (2)

		MIN	TYP	MAX	UNIT
Input voltage	Input voltage range after startup	3.6		65	V
Output voltage	Output voltage range for adjustable output variants	1		16	V
Output current	LMR36501 load current range (3)	0		100	mA
	LMR36502 load current range (3)	0		150	mA
Frequency setting	Selectable frequency range with RT (RT variant only)	0.2		2.2	MHz
External clock setting	External Sync CLK (MODE/SYNC variant only)	0.2		2.2	MHz
Temperature	T_J juction temperature	-40		150	°C

(1) Recommended operating conditions indicate conditions for which the device is intended to be functional, but do not ensure specific performance limits. For ensured specifications, see Electrical Characteristics table.
(2) High junction temperatures degrade operating lifetimes. Operating lifetime is de-rated for junction temperatures greater than 125℃
(3) Maximum continuous DC current may be derated when operating with high switching frequency and/or high ambient temperature. See Application section for details.

Copyright © 2023 Texas Instruments Incorporated

7.4 Thermal Information

The value of $R_{\theta JA}$ given in this table is only valid for comparison with other packages and cannot be used for design purposes. These values were calculated in accordance with JESD 51-7, and simulated on a 4-layer JEDEC board. They do not represent the performance obtained in an actual application.

THERMAL METRIC (1)		LMR36501 / LMR36502 VQFN (RPE) 9 Pins	UNIT
$R_{\theta JA}$	Junction-to-ambient thermal resistance	85.7	°C/W
$R_{\theta JC(top)}$	Junction-to-case (top) thermal resistance	64.7	°C/W
$R_{\theta JB}$	Junction-to-board thermal resistance	28.0	°C/W
Ψ_{JT}	Junction-to-top characterization parameter	2.0	°C/W
Ψ_{JB}	Junction-to-board characterization parameter	27.7	°C/W

(1) For more information about traditional and new thermal metrics, see the Semiconductor and IC Package Thermal Metrics application report. The value of $R_{\Theta JA}$ given in this table is only valid for comparison with other packages and can not be used for design purposes. This value was calculated in accordance with JESD 51-7, and simulated on a 4-layer JEDEC board. It does not represent the performance obtained in an actual application. For design information see the Maximum Ambient Temperature section.

7.5 Electrical Characteristics

Limits apply over the recommended operating junction temperature (T_J) range of –40°C to +150°C, unless otherwise stated. Minimum and maximum limits are specified through test, design or statistical correlation. Typical values represent the most likely parametric norm at T_J = 25°C, and are provided for reference purposes only. Unless otherwise stated, the following conditions apply: V_{IN} = 24 V. (1)

PARAMETER		TEST CONDITIONS	MIN	TYP	MAX	UNIT
SUPPLY VOLTAGE (VIN PIN)						
V_{IN_R}	Minimum operating input voltage (rising)	Rising threshold		3.4	3.55	V
V_{IN_F}	Minimum operating input voltage (falling)	Once operating; Falling threshold	2.45	3.0		V
I_{SD_13p5}	Shutdown quiescent current; measured at VIN pin (2)	V_{EN} = 0 V; V_{IN} = 13.5 V		0.5	1.1	µA
I_{SD_24p0}	Shutdown quiescent current; measured at VIN pin (2)	V_{EN} = 0 V; V_{IN} = 24 V		1	1.6	µA
$I_{Q_13p5_Fixed}$	Non-switching input current; measured at VIN pin (2)	V_{IN} = V_{EN} = 13.5 V; $V_{OUT/FB}$ = 5.25 V, V_{RT} = 0 V; Fixed output	0.25	0.672	1.05	µA
$I_{Q_13p5_Adj}$	Non-switching input current; measured at VIN pin (2)	V_{IN} = V_{EN} = 13.5 V; V_{FB} = 1.05 V, V_{RT} = 0 V; Adjustable output	14	17	22	µA
$I_{Q_24p0_Fixed}$	Non-switching input current; measured at VIN pin (2)	V_{IN} = V_{EN} = 24 V; $V_{OUT/FB}$ = 5.25 V, V_{RT} = 0 V; Fixed output	0.8	1.2	1.7	µA
$I_{Q_24p0_Adj}$	Non-switching input current; measured at VIN pin (2)	V_{IN} = V_{EN} = 24 V; V_{FB} = 1.05 V, V_{RT} = 0 V; Adjustable output	14	18	22	µA
I_{B_13p5}	Current into VOUT/FB pin (not switching) (2)	V_{IN} = 13.5 V, $V_{OUT/FB}$ = 5.25 V, V_{RT} = 0 V; Fixed output	14	17	22	µA
I_{B_24p0}	Current into VOUT/FB pin (not switching) (2)	V_{IN} = 24 V, $V_{OUT/FB}$ = 5.25 V, V_{RT} = 0 V; Fixed output	14	18	22	µA
ENABLE (EN PIN)						
$V_{EN-WAKE}$	Enable wake-up threshold		0.4			V
$V_{EN-VOUT}$	Precision enable high level		1.16	1.263	1.36	V
$V_{EN-HYST}$	Enable threshold hysteresis		0.285	0.35	0.425	V
I_{LKG-EN}	Enable input leakage current	V_{EN} = 3.3 V		0.2	8	nA

Copyright © 2023 Texas Instruments Incorporated

7.5 Electrical Characteristics (continued)

Limits apply over the recommended operating junction temperature (T_J) range of –40°C to +150°C, unless otherwise stated. Minimum and maximum limits are specified through test, design or statistical correlation. Typical values represent the most likely parametric norm at T_J = 25°C, and are provided for reference purposes only. Unless otherwise stated, the following conditions apply: V_{IN} = 24 V. (1)

PARAMETER		TEST CONDITIONS	MIN	TYP	MAX	UNIT
INTERNAL LDO						
V_{CC}	Internal VCC voltage	Adjustable or fixed output; Auto mode	3.1	3.15	3.25	V
I_{CC}	Bias regulator current limit			50	120	mA
$V_{CC-UVLO}$	Internal VCC undervoltage lockout	VCC rising under voltage threshold	3	3.3	3.65	V
$V_{CC-UVLO-HYST}$	Internal VCC under voltage lock-out hysteresis	Hysteresis below $V_{CC-UVLO}$	0.4	0.8	1.2	V
CURRENT LIMITS						
$I_{SC-100mA}$	Short circuit high side current limit (3)	100 mA version	140	167	200	mA
$I_{LS-LIMIT-100mA}$	Low side current limit (3)	100 mA version	99	116	135	mA
$I_{PEAK-MIN-100mA}$	Minimum peak inductor current limit (3)	PFM Operation, 100 mA version; Duty Cycle = 0%	30	40	50	mA
$I_{SC-150mA}$	Short circuit high side current limit (3)	150 mA version	210	250	298	mA
$I_{LS-LIMIT-150mA}$	Low side current limit (3)	150 mA version	150	175	204	mA
$I_{PEAK-MIN-150mA}$	Minimum Peak Inductor Current (3)	PFM Operation, 150 mA version; Duty Cycle = 0%	55	70	85	mA
I_{ZC}	Zero cross current (3)	Auto mode	0	2.5	5	mA
$I_{L-NEG-100mA}$	Sink current limit (negative) (3)	FPWM mode	-200	-175	-150	mA
$I_{L-NEG-150mA}$	Sink current limit (negative) (3)	FPWM mode	-200	-175	-150	mA
POWER GOOD						
PG-OV	PGOOD upper threshold - rising	% of FB (Adjustable output) or % of VOUT/FB (Fixed output)	106	107	110	%
PG-UV	PGOOD lower threshold - falling	% of FB (Adjustable output) or % of VOUT/FB (Fixed output)	93	94	96.5	%
PG-HYS	PGOOD hysteresis - rising/falling	% of FB (Adjustable output) or % of VOUT/FB (Fixed output)	0.8	1.2	1.8	%
$V_{PG-VALID}$	Minimum input voltage for proper PG function		0.7	0.9	2	V
$R_{PG-EN5p0}$	PGOOD pull down resistance	V_{EN} = 5.0 V, 1 mA pull-up current	20	40	70	Ω
R_{PG-EN0}	PGOOD pull down resistance	V_{EN} = 0 V, 1 mA pull-up current	15	24	46	Ω
MOSFETS						
$R_{DSON-HS}$	High-side MOSFET on-resistance	Load = 100 mA		2.2		Ω
$R_{DSON-LS}$	Low-side MOSFET on-resistance	Load = 100 mA		1		Ω
$V_{BOOT-UVLO}$	BOOT - SW UVLO threshold (4)		2.14	2.3	2.42	V
VOLTAGE FEEDBACK (VOUT/FB PIN)						
V_{OUT}	Output Voltage Accuracy for fixed V_{OUT}	V_{OUT} = 3.3-V, V_{IN} = 3.6 V to 65 V, FPWM	3.24	3.3	3.34	V
V_{OUT}	Output Voltage Accuracy for fixed V_{OUT}	V_{OUT} = 5-V, V_{IN} = 5.5 V to 65 V, FPWM	4.93	5	5.08	V
V_{REF}	Internal reference voltage	V_{IN} = 3.6 V to 65 V, FPWM mode	0.985	1	1.01	V
I_{FB}	FB input current	Adjustable output, FB = 1 V		1	30	nA
THERMAL SHUTDOWN						
T_{SD-R}	Thermal shutdown rising	Shutdown threshold	158	168	180	°C
T_{SD-HYS}	Thermal shutdown hysteresis		8	10	15	°C
SOFT START						
t_{SS}	Time from first SW pulse to V_{FB} at 90% of V_{REF}	$V_{IN} \geqslant$ 3.6 V	1.95	2.58	3.2	ms

Copyright © 2023 Texas Instruments Incorporated

7.5 Electrical Characteristics (continued)

Limits apply over the recommended operating junction temperature (T_J) range of –40°C to +150°C, unless otherwise stated. Minimum and maximum limits are specified through test, design or statistical correlation. Typical values represent the most likely parametric norm at T_J = 25°C, and are provided for reference purposes only. Unless otherwise stated, the following conditions apply: V_{IN} = 24 V. (1)

PARAMETER		TEST CONDITIONS	MIN	TYP	MAX	UNIT
POWER GOOD						
t_{RESET_FILTER}	Glitch filter time constant for PG function		15	25	40	µs
t_{PGOOD_ACT}	Delay time to PG high signal		1.7	1.956	2.16	ms
PWM LIMITS (SW)						
t_{ON-MIN}	Minimum switch on-time	V_{IN} = 24 V, I_{OUT} = 150 mA	40	55	80	ns
$t_{OFF-MIN}$	Minimum switch off-time		40	60	90	ns
t_{ON-MAX}	Maximum switch on-time	HS timeout in dropout	7.6	9	9.8	µs
OSCILLATOR (RT)						
f_{OSC_2p2MHz}	Internal oscillator frequency	RT = GND	2.1	2.2	2.3	MHz
f_{OSC_1p0MHz}	Internal oscillator frequency	RT = VCC	0.93	1	1.05	MHz
f_{ADJ_400kHz}	Accuracy of external frequency, 400 kHz	RT = 39.2 kΩ	0.34	0.4	0.46	MHz

(1) MIN and MAX limits are 100% production tested at 25ºC. Limits over the operating temperature range verified through correlation using Statistical Quality Control (SQC) methods. Limits are used to calculate Average Outgoing Quality Level (AOQL).
(2) This is the current used by the device open loop. It does not represent the total input current of the system when in regulation.
(3) The current limit values in this table are tested, open loop, in production. They may differ from those found in a closed loop application.
(4) When the voltage across the C_{BOOT} capacitor falls below this voltage, the low side MOSFET is turn to recharge the boot capacitor

Copyright © 2023 Texas Instruments Incorporated

7.6 System Characteristics

The following specifications apply only to the typical applications circuit, with nominal component values. Specifications in the typical (TYP) column apply to T_J = 25°C only. Specifications in the minimum (MIN) and maximum (MAX) columns apply to the case of typical components over the temperature range of T_J = –40°C to 150°C. These specifications are not ensured by production testing.

PARAMETER		TEST CONDITIONS	MIN	TYP	MAX	UNIT
STANDBY CURRENT AND DUTY RATIO						
I_{SUPPLY}	Input supply current when in regulation	V_{IN} = 13.5 V, $V_{OUT/FB}$ = 3.3 V, I_{OUT} = 0 A, PFM mode		6.5		µA
I_{SUPPLY}	Input supply current when in regulation	V_{IN} = 24 V, $V_{OUT/FB}$ = 3.3 V, I_{OUT} = 0 A, PFM mode		4		µA
t_{ON-MIN}	Minimum switch on-time	Frequency foldback		30		ns
D_{MAX}	Maximum switch duty cycle (1)			98%		
OUTPUT VOLTAGE ACCURACY (VOUT/FB)						
$V_{OUT_3p3V_ACC}$	V_{OUT} = 3.3-V, V_{IN} = 3.6 V to 65 V, I_{OUT} = 0 A to full load (2)	FPWM mode	–1.5		1.5	%
$V_{OUT_3p3V_ACC}$	V_{OUT} = 3.3-V, V_{IN} = 3.6 V to 65 V, I_{OUT} = 0 A to full load (2)	AUTO mode	–1.5		2.5	%
$V_{OUT_5p0V_ACC}$	V_{OUT} = 5-V, V_{IN} = 5.5 V to 65 V, I_{OUT} = 0 A to full load (2)	FPWM mode	–1.5		1.5	%
$V_{OUT_5p0V_ACC}$	V_{OUT} = 5-V, V_{IN} = 5.5 V to 65 V, I_{OUT} = 0 A to full load (2)	AUTO mode	–1.5		2.5	%

(1) In dropout the switching frequency drops to increase the effective duty cycle. The lowest frequency is clamped at approximately: f_{MIN} = 1 / (t_{ON-MAX} + $T_{OFF-MIN}$). D_{MAX} = (t_{ON-MAX}) / (t_{ON-MAX} + $t_{OFF-MIN}$).
(2) Deviation is with respect to V_{IN} = 13.5 V

Copyright © 2023 Texas Instruments Incorporated

7.7 Typical Characteristics

Unless otherwise specified, the following conditions apply: T_A = 25°C, V_{IN} = 13.5 V.

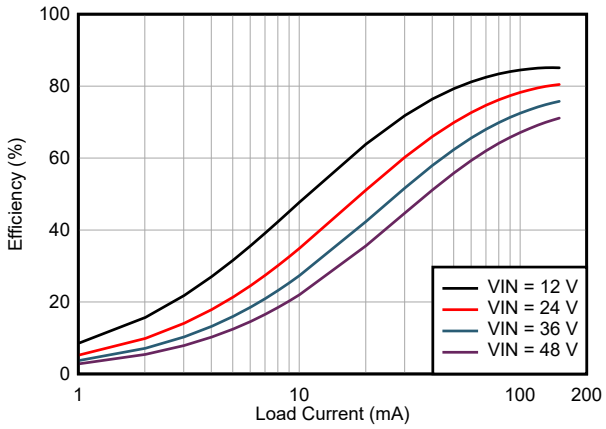

LMR36502F3 V_{OUT} = 3.3 V Fixed 1 MHz (FPWM)

图 7-1. Efficiency

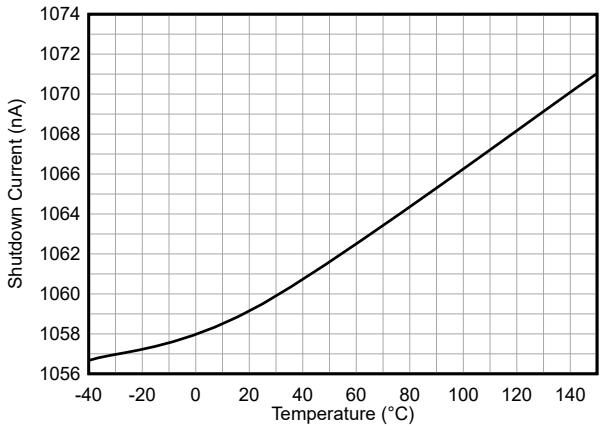

图 7-2. Typical Shutdown Current for 24-V VIN

Copyright © 2023 Texas Instruments Incorporated

8 Detailed Description

8.1 Overview

The LMR3650x is a wide input, low-quiescent current, synchronous buck converter that operates over a wide range of duty ratio and switching frequencies, from 200 kHz to 2.2 MHz. During wide input transients, if the minimum on time or the minimum off time cannot support the desired duty ratio at the higher switching frequency settings, the switching frequency is reduced automatically, allowing the LMR3650x to maintain the output voltage regulation. With an internally compensated design optimized for minimal output capacitors, the system design process with the LMR3650x is simplified significantly compared to other buck regulators available in the market.

The device is designed to minimize external component cost and solution size while operating in all demanding industrial environments. An internally compensated control loop simplifies the design procedure, and is optimized to reduce the required output capacitance, reducing solution size and cost. The LMR3650x includes variants that can be set up to operate over a wide switching frequency range, from 200 kHz to 2.2 MHz, with the correct resistor selection from the RT pin to ground. To further reduce system cost, the PGOOD output feature with built-in delayed release allows the elimination of the reset supervisor in many applications.

The LMR3650x comes in an ultra-small 2-mm × 2-mm (HotRod™) QFN package along with specially designed corner anchor pins for reliable board level solder connections. Given that the package size is very small and the increase reliability of solder connectivity due to corner anchor pins, the LMR3650x offers a reduced solution size and high reliability for space constrained industrial applications.

Copyright © 2023 Texas Instruments Incorporated

8.2 Functional Block Diagram

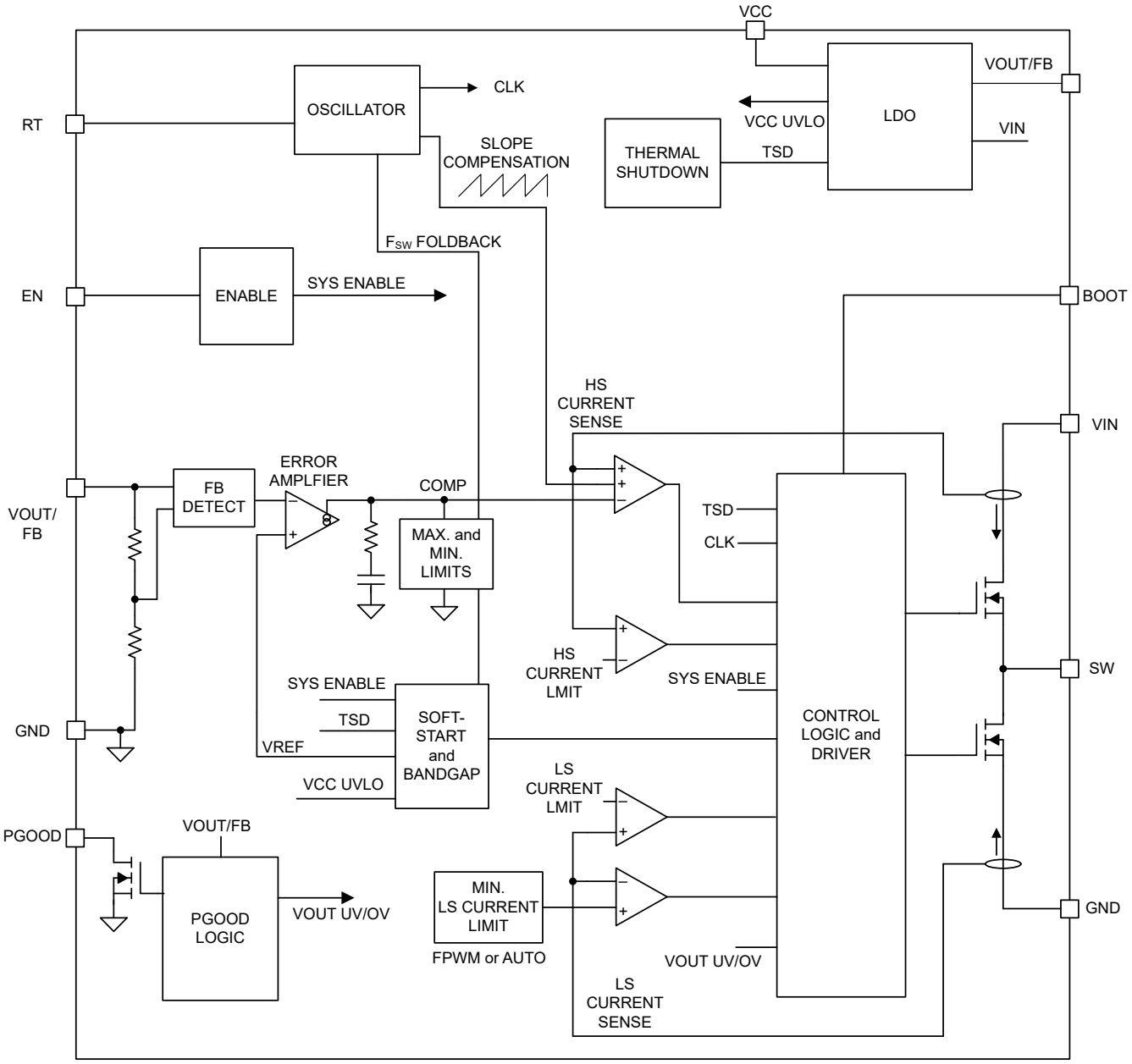

Copyright © 2023 Texas Instruments Incorporated

8.3 Feature Description

8.3.1 Enable, Shutdown, and Start-up

The voltage at the EN/UVLO pin controls the start-up voltage and shutdown voltage of the LMR3650x. There are three distinct modes set by the EN/UVLO pin; shut-down, standby and active. As long as the EN/UVLO pin voltage is less than $V_{EN-WAKE}$ the device is shutdown mode. During shutdown mode, the input current drawn by the device typically is 0.5 µA (V_{IN} = 13.5 V). The internal LDO regulator is not operational. When the voltage at the EN/UVLO pin is greater than the $V_{EN-WAKE}$ but less than $V_{EN-VOUT}$ the device enters the standby mode. In standby mode, the internal LDO is enabled. As the EN/UVLO pin voltage increases above $V_{EN-VOUT}$, the device enters active mode starting the feedback resistor detection. After feedback detect is completed, soft-start functionality is released to slowly increases the output voltage and switching starts. To stop switching and enter standby mode the EN/UVLO pin must fall below ($V_{EN-VOUT}$ – $V_{EN-HYST}$). Any further decrease in the EN/UVLO pin voltage below $V_{EN-WAKE}$ the device is in shutdown. The various EN/UVLO threshold parameters and their values are listed in 节 7.5. See 节 8.3.6 for information about feedback resistor detection. 图 8-1 shows the precision enable behavior.

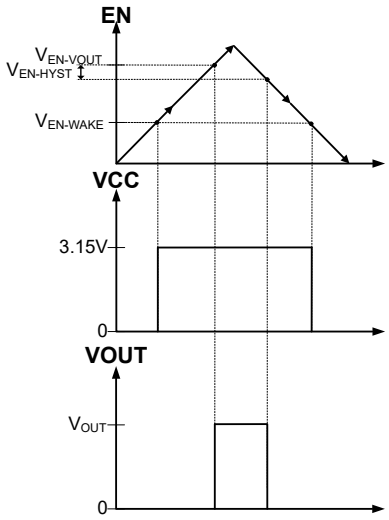

图 8-1. Precision Enable Behavior

Remote precision undervoltage lockout can be implemented with this functionality as shown in 图 8-2. See 节 9.2.2.9 for component selection.

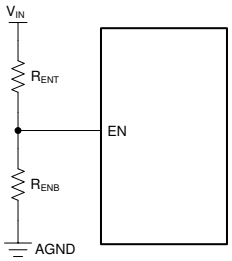

图 8-2. V_{IN} Undervoltage Lockout Using the EN/UVLO Pin

The high-voltage compliant EN/UVLO pin can be connected directly to the VIN input pin if remote precision control is not needed. The EN/UVLO pin must not be allowed to float. The various EN threshold parameters are listed in the 节 7.5. 图 8-1 shows the precision enable behavior. After EN/UVLO goes above $V_{EN-VOUT}$ with a delay of about 1 ms, the output voltage begins to rise with a soft-start and reaches close to the final value in about 2.58 ms (t_{ss}). After a delay of about 2 ms (t_{PGOOD_ACT}), the PGOOD flag goes high. During startup, the

Copyright © 2023 Texas Instruments Incorporated

device is not allowed to enter FPWM mode until the soft-start time has elapsed. Check 节 9.2.2.9 for component selection.

8.3.2 Adjustable Switching Frequency (with RT)

The select variants in the LMR3650x family with the RT pin allow the power designers to set any desired operating frequency between 200 kHz and 2.2 MHz in their applications. See 图 8-3 to determine the resistor value needed for the desired switching frequency. See 表 8-1 for selection on programming the RT pin.

表 8-1. RT Pin Setting

RT INPUT	SWITCHING FREQUENCY
VCC	1 MHz
GND	2.2 MHz
RT to GND	Adjustable according to 图 8-3
Float (Not Recommended)	No Switching

方程式 1 can be used to calculate the value of RT for a desired frequency.

$$RT = \frac{18286}{Fsw^{1.021}} \quad (1)$$

where

- RT is the frequency setting resistor value (kΩ).
- F_{SW} is the switching frequency (kHz).

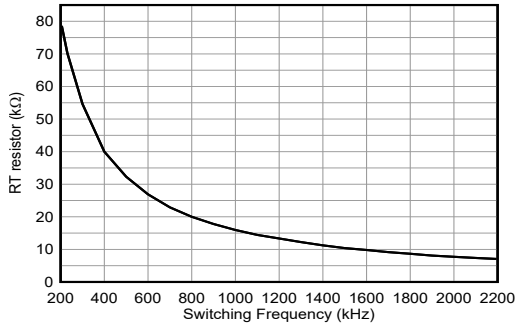

图 8-3. RT Values vs Frequency

8.3.3 Power-Good Output Operation

The power-good feature using the PGOOD pin of the LMR3650x can be used to reset a system microprocessor whenever the output voltage is out of regulation. This open-drain output remains low under device fault conditions, such as current limit and thermal shutdown, as well as during normal startup. A glitch filter prevents false flag operation for any short duration excursions in the output voltage, such as during line and load transients. Output voltage excursions lasting less than t_{RESET_FILTER} do not trip the power-good flag. Power-good operation can best be understood in reference to 图 8-4. 表 8-2 gives a more detailed breakdown the PGOOD operation. Here, V_{PG-UV} is defined as the PG-UV scaled version of the $V_{OUT-Reg}$ (target regulated output voltage) and V_{PG-HYS} as the PG-HYS scaled version of the $V_{OUT-Reg}$, where both PG-UV and PG-HYS are listed in 节 7.5. During the initial power up, a total delay of 5 ms (typical) is encountered from the time the $V_{EN-VOUT}$ is triggered to the time that the power-good is flagged high. This delay only occurs during the device startup and is not encountered during any other normal operation of the power-good function. When EN/UVLO is pulled low, the power-good flag output is also forced low. With EN/UVLO low, power-good remains valid as long as the input voltage ($V_{PG-VALID}$ is ≥ 1 V (typical)).

The power-good output scheme consists of an open-drain n-channel MOSFET, which requires an external pullup resistor connected to a suitable logic supply. It can also be pulled up to either V_{CC} or V_{OUT} through an

Copyright © 2023 Texas Instruments Incorporated

appropriate resistor, as desired. If this function is not needed, the PGOOD pin can be open or grounded. Limit the current into this pin to ≤ 4 mA.

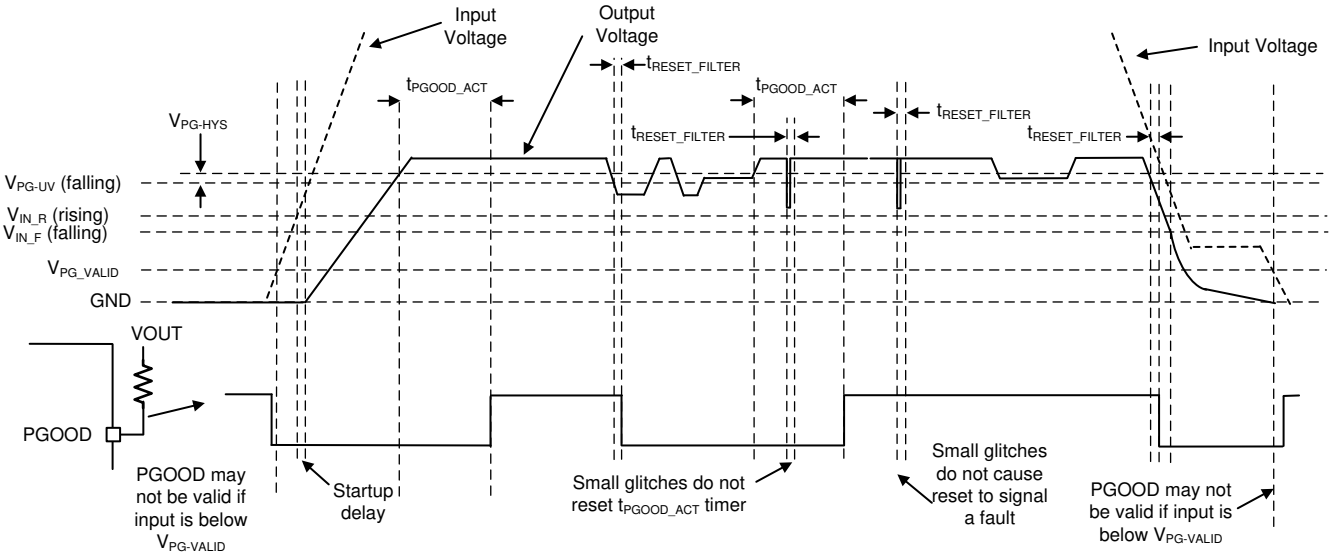

图 8-4. Power-Good Operation (OV Events Not Included)

表 8-2. Fault Conditions for PGOOD (Pull Low)

FAULT CONDITION INITIATED	FAULT CONDITION ENDS (AFTER WHICH t_{PGOOD_ACT} MUST PASS BEFORE PGOOD OUTPUT IS RELEASED)
$V_{OUT} < V_{PG-UV}$ AND $t > t_{RESET_FILTER}$	Output voltage in regulation: $V_{PG-UV} + V_{PG-HYS} < V_{OUT} < V_{PG-OV} - V_{PG-HYS}$
$V_{OUT} > V_{PG-OV}$ AND $t > t_{RESET_FILTER}$	Output voltage in regulation
$T_J > T_{SD-R}$	$T_J < T_{SD-F}$ AND output voltage in regulation
$EN < V_{EN-VOUT} - V_{EN-HYST}$	$EN > V_{EN-VOUT}$ AND output voltage in regulation
$V_{CC} < V_{CC-UVLO} - V_{CC-UVLO-HYST}$	$V_{CC} > V_{CC-UVLO}$ AND output voltage in regulation

8.3.4 Internal LDO, VCC UVLO, and VOUT/FB Input

The LMR3650x uses the internal LDO output and the VCC pin for all internal power supply. The VCC pin draws power either from the VIN (in adjustable output variants) or the VOUT/FB depending on how the output voltage is configured. In the fixed output configuration, after the LMR3650x is active but has yet to regulate, the VCC rail continues to draw power from the VIN pin, until the VOUT/FB voltage reaches greater than 3.15 V (or when the device has reached steady-state regulation post the soft start). The VCC rail typically measures 3.15 V in both adjustable and fixed output variants. To prevent unsafe operation, VCC has an undervoltage lockout, which prevents switching if the internal voltage is too low. See $V_{VCC-UVLO}$ and $V_{VCC-UVLO-HYST}$ in 节 7.5. During startup, VCC momentarily exceeds the normal operating voltage until $V_{VCC-UVLO}$ is exceeded, then drops to the normal operating voltage. Note that these undervoltage lockout values, when combined with the LDO dropout, drives the minimum input voltage rising and falling thresholds.

8.3.5 Bootstrap Voltage and $V_{BOOT-UVLO}$ (BOOT Terminal)

The high-side switch driver circuit requires a bias voltage higher than VIN to ensure the HS switch is turned on. The capacitor connected between BOOT and SW works as a charge pump to boost voltage on the BOOT terminal to (SW + VCC). The boot diode is integrated on the LMR3650x die to minimize physical solution size. TI recommends a 100-nF capacitor rated for 10 V or higher for C_{BOOT}. The BOOT rail has an UVLO setting. This UVLO has a threshold of $V_{BOOT-UVLO}$ and is typically set at 2.3 V. If the C_{BOOT} capacitor is not charged above this voltage with respect to the SW pin, then the part initiates a charging sequence, turning on the low-side switch before attempting to turn on the high-side device.

Copyright © 2023 Texas Instruments Incorporated

8.3.6 Output Voltage Selection

In the LMR3650x, each variant can be configured as a fixed output voltage or an adjustable output voltage. During device initialization the device configures the target output voltage to an internally selected value or an adjustable version by detecting if feedback resistors are present. When configuring the output voltage to be fixed value, simply connect the VOUT/FB pin to the system output voltage node. See *节 5* for the fixed output voltage setting of each variant.

To configure an adjustable output voltage, external feedback resistors are required as shown in 图 8-5. By connecting external feedback resistors with a parallel resistance greater than 5 kΩ but less than or equal to 10 kΩ (see *方程式 2*) the output voltage is set according as needed. The internal voltage reference is 1 V. Refer to 节 9.2.2.2.1 for more details on how to adjust the output voltage.

When using the fixed-output configuration from the device family, simply connect the FB pin (identified as VOUT/FB pin for fixed-output variants in the rest of the datasheet) to the system output voltage node. See *节 5* for more details.

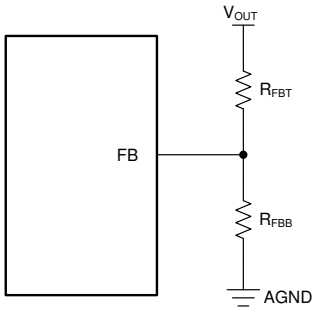

图 8-5. Setting Output Voltage for Adjustable Output Variant

$$5\ k\Omega\ <\ R_{FBT}||R_{FBB}\ \leq 10\ k\Omega \quad (2)$$

- R_{FBT} is the top resistor of the feedback divider
- R_{FBB} is the bottom resistor of the feedback divider

When configured in adjustable output voltage mode, an addition feed-forward capacitor, C_{FF}, in parallel with the R_{FBT}, can be used to optimize the phase margin and transient response. See *节 9.2.2.8* for more details. No additional resistor divider or feed-forward capacitor, C_{FF}, is needed in fixed-output variants.

8.3.7 Soft Start and Recovery from Dropout

When designing with the LMR3650x, both soft start and recovery from dropout can cause slow rise in output voltage and must be considered as a two separate operating conditions, as shown in 图 8-6 and 图 8-7. These features ramp the output voltage at a controlled rate, keeping the output voltage from overshooting. See 节 8.3.7.1 and 节 8.3.7.2 for more details.

8.3.7.1 Soft Start

The soft-start feature allows the converter to gradually reach the steady state output voltage, reducing the startup stress in the system. Soft start is triggered by any of the following conditions:

- Voltage is applied to the VIN pin of the device, releasing undervoltage lockout.
- EN/UVLO voltage is sufficient to enter active mode.
- Recovery from shutdown due to over temperature protection.

After soft start is triggered, the internal reference is slowly ramped up. Assuming the output voltage is initially 0 V, the reference is ramped to 90% of the target output voltage in t_{SS}. During the soft-start time the switching

Copyright © 2023 Texas Instruments Incorporated

mode is set to AUTO mode. AUTO mode activates diode emulation for the low-side MOSFET, not allowing negative inductor current. This allows the output voltage to be pre-biased, voltage already present on the output, during startup without discharging the output capacitor. 图 8-6 shows the difference between a non biased soft start and a pre-biased soft start.

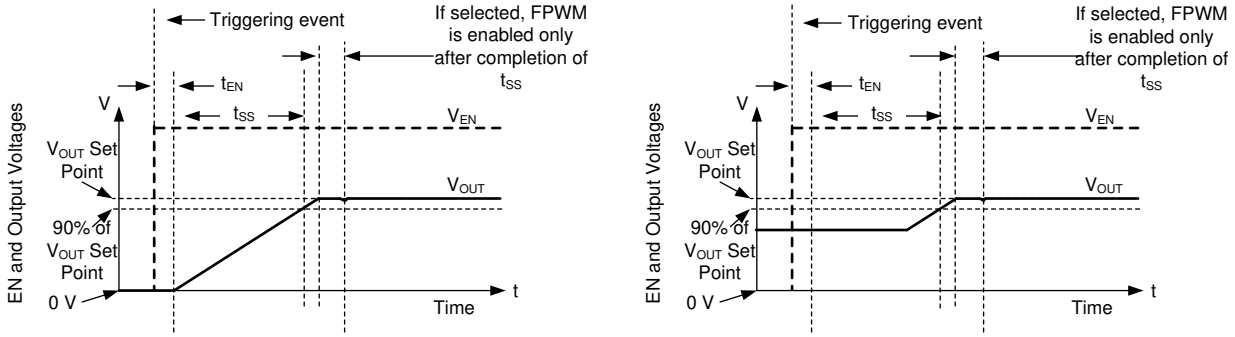

图 8-6. Soft Start with and Without Pre-biased Voltage

8.3.7.2 Recovery from Dropout

Any time the output voltage falls more than a few percent, output voltage ramps up slowly. This condition, called graceful recovery, differs from soft start in two important ways:

- The reference voltage is set to approximately 1% above what is needed to achieve the existing output voltage.
- If the device mode is set to FPWM, the device mode continues to operate in that mode during its recovery from dropout. If output voltage were to suddenly be pulled up by an external supply, the LMR3650x can pull down on the output. Note that all protections that are present during normal operation are in place, preventing any catastrophic failure if output is shorted to a high voltage or ground.

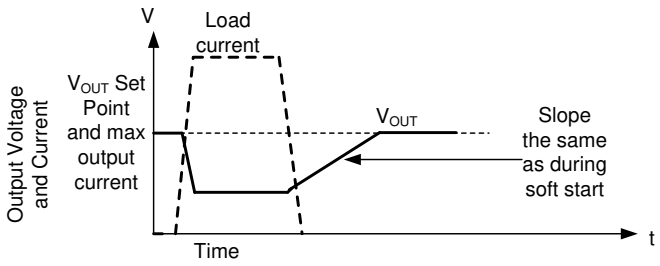

图 8-7. Recovery from Dropout

Whether output voltage falls due to high load or low input voltage, after the condition that causes output to fall below its set point is removed, the output climbs at the same speed as during start-up.

8.3.8 Current Limit and Short Circuit

The LMR3650x is protected from overcurrent conditions by cycle-by-cycle current limiting on both high-side and low-side MOSFETs.

High-side MOSFET overcurrent protection is implemented by the typical peak-current mode control scheme. The HS switch current is sensed when the HS is turned on after a short blanking time. The HS switch current is compared to either the minimum of a fixed current set point or the output of the internal error amplifier loop minus the slope compensation every switching cycle. Because the output of the internal error amplifier loop has a maximum value and slope compensation increases with duty cycle, HS current limit decreases with increased duty factor if duty factor is typically above 35%.

Copyright © 2023 Texas Instruments Incorporated

When the LS switch is turned on, the current going through it is also sensed and monitored. Like the high-side device, the low-side device has a turn-off commanded by the internal error amplifier loop. In the case of the low-side device, turn-off is prevented if the current exceeds this value, even if the oscillator normally starts a new switching cycle. Also like the high-side device, there is a limit on how high the turn-off current is allowed to be. This limit is called the low-side current limit, I_{VALMAX} in 图 8-8. If the LS current limit is exceeded, the LS MOSFET stays on and the HS switch is not to be turned on. The LS switch is turned off after the LS current falls below this limit and the HS switch is turned on again as long as at least one clock period has passed since the last time the HS device has turned on.

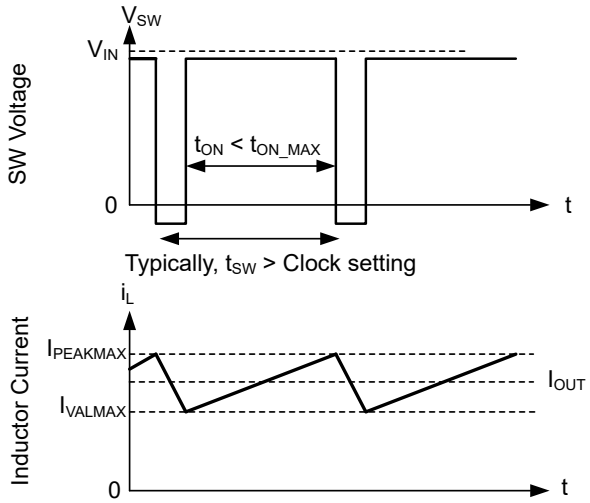

图 8-8. Current Limit Waveforms

Because the current waveform assumes values between $I_{PEAKMAX}$ and I_{VALMAX}, the maximum output current is very close to the average of these two values unless duty factor is very high. After operating in current limit, hysteretic control is used and current does not increase as output voltage approaches zero.

If the duty factor is very high, current ripple must be very low to prevent instability. Because current ripple is low, the part is able to deliver full current. The current delivered is very close to I_{VALMAX}.

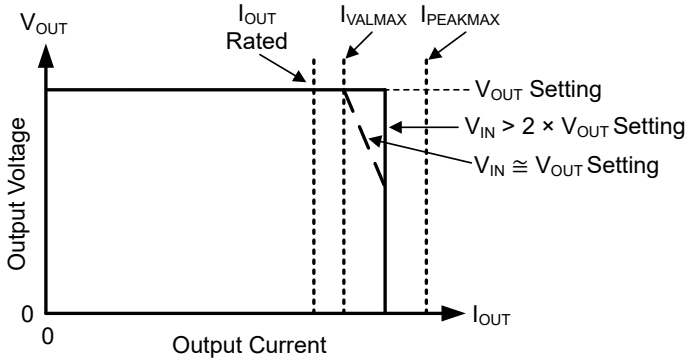

图 8-9. Output Voltage versus Output Current

Under most conditions, current is limited to the average of $I_{PEAKMAX}$ and I_{VALMAX}, which is approximately 1.3 times the maximum rated current. If input voltage is low, current can be limited to approximately I_{VALMAX}. Also note that the maximum output current does not exceed the average of $I_{PEAKMAX}$ and I_{VALMAX}. After the overload is removed, the part recovers as though in soft start.

Copyright © 2023 Texas Instruments Incorporated

8.3.9 Thermal Shutdown

Thermal shutdown limits total power dissipation by turning off the internal switches when the device junction temperature exceeds 168°C (typical). Thermal shutdown does not trigger below 158°C (minimum). After thermal shutdown occurs, hysteresis prevents the part from switching until the junction temperature drops to approximately 158°C (typical). When the junction temperature falls below 158°C (typical), the LMR3650x attempts another soft start.

While the LMR3650x is shut down due to high junction temperature, power continues to be provided to VCC. To prevent overheating due to a short circuit applied to VCC, the LDO that provides power for VCC has reduced current limit while the part is disabled due to high junction temperature. The LDO only provides a few milliamperes during thermal shutdown.

8.3.10 Input Supply Current

The LMR3650x is designed to have very low input supply current when regulating light loads. This low input supply current is achieved by powering much of the internal circuitry from the output. When configured as a fixed output voltage, the VOUT/FB pin is the input to the LDO that powers the majority of the control circuits. By connecting the VOUT/FB input pin to the output node of the regulator, a small amount of current is drawn from the output. This current is reduced at the input by the ratio of V_{OUT} / V_{IN}.

$$I_{Q_VIN} = I_Q + I_{EN} + I_{BIAS} \times \frac{V_{OUT}}{\eta_{eff} \times V_{IN}} \quad (3)$$

where

- I_{Q_VIN} is the total standby (switching) current consumed by the operating (switching) buck converter when unloaded.
- I_Q is the current drawn from the V_{IN} terminal. Check $I_{Q_13p5_Fixed}$ or $I_{Q_24p0_Fixed}$ in *Electrical Characteristics* for I_Q.
- I_{EN} is current drawn by the EN terminal. Include this current if EN is connected to VIN. Check I_{LKG-EN} in *Electrical Characteristics* for I_{EN}.
- I_{BIAS} is bias current drawn by the BIAS LDO. Check I_{B_13p5} or I_{B_24p0} in *Electrical Characteristics* for I_{BIAS}.
- η_{eff} is the light-load efficiency of the buck converter with I_{Q_VIN} removed from the input current of the buck converter. η_{eff} = 0.8 is a conservative value that can be used under normal operating conditions. This can be traced back as the I_{SUPPLY} in *System Characteristics*.

Copyright © 2023 Texas Instruments Incorporated

8.4 Device Functional Modes

8.4.1 Shutdown Mode

The EN/UVLO pin provides electrical on and off control of the device. When the EN/UVLO pin voltage is below 0.4 V, the internal LDO is disabled and there is no switching of the internal Power MOSFETs. In shutdown mode, the quiescent current drops to 0.5 µA, typically.

8.4.2 Standby Mode

When the EN/UVLO pin voltage is greater than the $V_{EN-WAKE}$ but less than $V_{EN-VOUT}$, the internal LDO is enabled. The precision enable circuitry, is enabled after VCC is above its undervoltage threshold ($V_{CC-UVLO}$). The internal power MOSFETs remain off unless the voltage on EN/UVLO pin voltage goes above its precision enable threshold ($V_{EN-VOUT}$).

8.4.3 Active Mode

The LMR3650x is in active mode whenever the EN/UVLO pin is above $V_{EN-VOUT}$, V_{IN} is high enough to satisfy V_{IN_R}, and no other fault conditions are present. The simplest way to enable the operation is to connect the EN/UVLO pin to V_{IN}, which allows self start-up when the applied input voltage exceeds the minimum V_{IN_R}.

In active mode, depending on the load current, input voltage, and output voltage, the LMR3650x is in one of five modes:

- ***Continuous Conduction Mode*** (CCM) with fixed switching frequency when load current is above half of the inductor current ripple
- ***AUTO Mode*** - Light Load Operation: PFM when switching frequency is decreased at very light load
- ***FPWM Mode*** - Light Load Operation: Continuous Conduction Mode (CCM) when the load current is lower than half of the inductor current ripple
- ***Minimum on-time***: At high input voltage and low output voltages, the switching frequency is reduced to maintain regulation.
- ***Dropout mode***: When switching frequency is reduced to minimize voltage dropout.

8.4.3.1 CCM Mode

The following operating description of the LMR3650x refers to the *Functional Block Diagram* and to the waveforms in 图 8-10. The LMR3650x has two behaviors while lightly loaded, AUTO mode and FPWM mode. Regardless of the light load operation configuration, the converter operates in CCM when the load current is greater than half the inductor ripple current.

In CCM, the LMR3650x supplies a regulated output voltage by turning on the internal high-side (HS) and low-side (LS) switches with varying duty cycle (D). During the HS switch on-time, the SW pin voltage, V_{SW}, swings up to approximately V_{IN}, and the inductor current, i_L, increases with a linear slope. The HS switch is turned off by the control logic. During the HS switch off-time, t_{OFF}, the LS switch is turned on. Inductor current discharges through the LS switch, which forces the V_{SW} to swing below ground by the voltage drop across the LS switch. The converter loop adjusts the duty cycle to maintain a constant output voltage. D is defined by the on-time of the HS switch over the switching period:

$$D = T_{ON} / T_{SW} \quad (4)$$

In an ideal buck converter where losses are ignored, D is proportional to the output voltage and inversely proportional to the input voltage:

$$D = V_{OUT} / V_{IN} \quad (5)$$

Copyright © 2023 Texas Instruments Incorporated

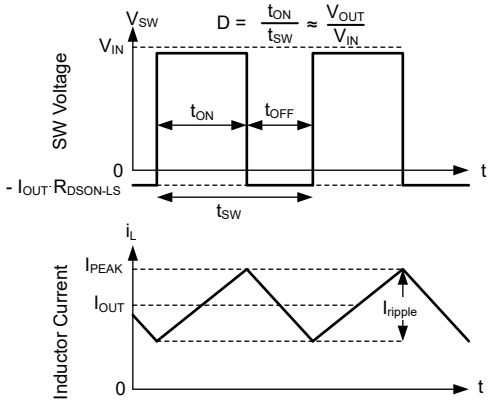

图 8-10. SW Voltage and Inductor Current Waveforms in Continuous Conduction Mode (CCM)

8.4.3.2 AUTO Mode - Light Load Operation

AUTO mode operation allows for seamless transition between normal current mode operation while heavily loaded and highly efficient light load operation. The other behavior, called FPWM mode, maintains full frequency even when unloaded. Which mode the LMR3650x operates in depends on which variant from this family is selected. Note that all parts operate in FPWM mode when synchronizing frequency to an external signal.

The light load operation is employed in the LMR3650x only in the auto mode. The light load operation employs two techniques to improve efficiency:

- Diode emulation, which allows DCM operation. See 图 8-11.
- Frequency reduction. See 图 8-12.

Note that while these two features operate together to improve light load efficiency, they operate independent of each other.

8.4.3.2.1 Diode Emulation

Diode emulation prevents reverse current through the inductor which requires a lower frequency needed to regulate given a fixed peak inductor current. Diode emulation also limits ripple current as frequency is reduced. With a fixed peak current, as output current is reduced to zero, frequency must be reduced to near zero to maintain regulation.

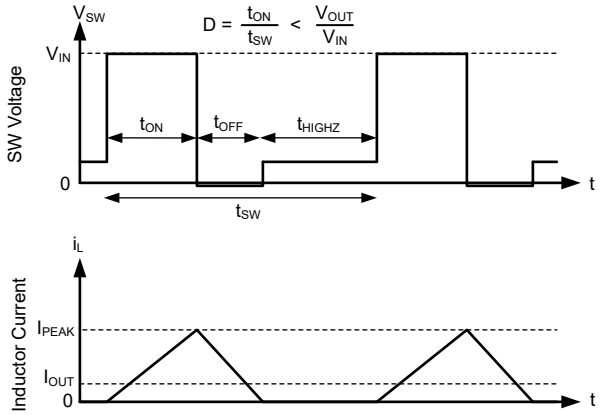

In auto mode, the low-side device is turned off after SW node current is near zero. As a result, after output current is less than half of what inductor ripple is in CCM, the part operates in DCM which is equivalent to the statement that diode emulation is active.

图 8-11. PFM Operation

The LMR3650x has a minimum peak inductor current setting (see $I_{PEAK-MIN}$ in 节 7.5) while in auto mode. After current is reduced to a low value with fixed input voltage, on-time is constant. Regulation is then achieved by adjusting frequency. This mode of operation is called PFM mode regulation.

8.4.3.2.2 Frequency Reduction

The LMR3650x reduces frequency whenever output voltage is high. This function is enabled whenever the internal error amplifier compensation output, COMP, an internal signal, is low and there is an offset between the regulation set point of FB and the voltage applied to FB. The net effect is that there is larger output impedance while lightly loaded in auto mode than in normal operation. Output voltage must be approximately 1% high when the part is completely unloaded.

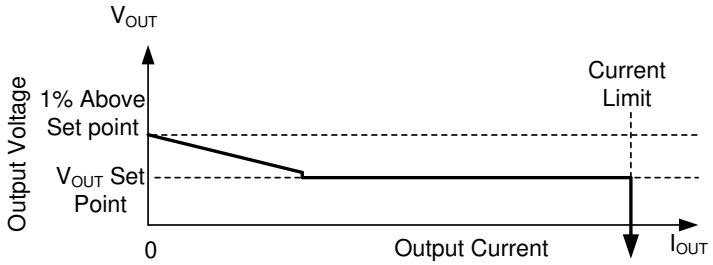

In auto mode, after output current drops below approximately 1/10th the rated current of the part, output resistance increases so that output voltage is 1% high while the buck is completely unloaded.

图 8-12. Steady State Output Voltage versus Output Current in Auto Mode

In PFM operation, a small DC positive offset is required on the output voltage to activate the PFM detector. The lower the frequency in PFM, the more DC offset is needed on V_{OUT}. If the DC offset on V_{OUT} is not acceptable, a dummy load at V_{OUT} or FPWM Mode can be used to reduce or eliminate this offset.

8.4.3.3 FPWM Mode - Light Load Operation

In FPWM Mode, frequency is maintained while lightly loaded. To maintain frequency, a limited reverse current is allowed to flow through the inductor. Reverse current is limited by reverse current limit circuitry, see 节 7.5 for reverse current limit values.

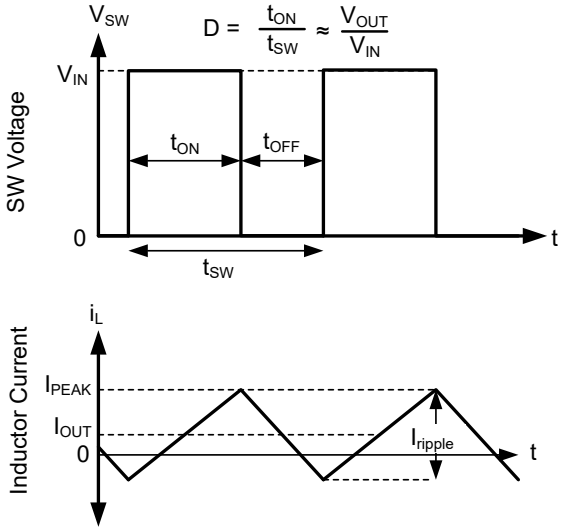

In FPWM mode, Continuous Conduction (CCM) is possible even if I_{OUT} is less than half of I_{ripple}.

图 8-13. FPWM Mode Operation

Copyright © 2023 Texas Instruments Incorporated

For all devices, in FPWM mode, frequency reduction is still available if output voltage is high enough to command minimum on-time even while lightly loaded, allowing good behavior during faults which involve output being pulled up.

Copyright © 2023 Texas Instruments Incorporated

8.4.3.4 Minimum On-time Operation

The LMR3650x continues to regulate output voltage even if the input-to-output voltage ratio requires an on-time less than the minimum. This action is accomplished using valley current control. At all times, the compensation circuit dictates both a maximum peak inductor current and a maximum valley inductor current. If for any reason, valley current is exceeded, the clock cycle is extended until valley current falls below that determined by the compensation circuit. If the converter is not operating in current limit, the maximum valley current is set above the peak inductor current, preventing valley control from being used unless there is a failure to regulate using peak current only. If the input-to-output voltage ratio is too high, such that the inductor current peak value exceeds the peak command dictated by compensation, the high-side device cannot be turned off quickly enough to regulate output voltage. As a result, the compensation circuit reduces both peak and valley current. After a low enough current is selected by the compensation circuit, valley current matches that being commanded by the compensation circuit. Under these conditions, the low-side device is kept on and the next clock cycle is prevented from starting until inductor current drops below the desired valley current. Because on-time is fixed at its minimum value, this type of operation resembles that of a device using a Constant On-Time (COT) control scheme; see 图 8-14.

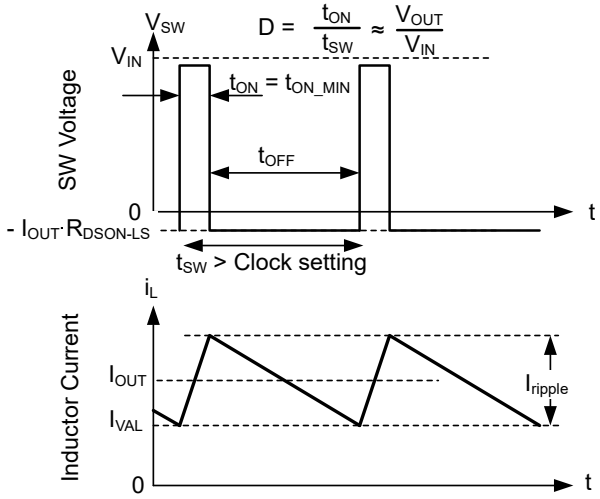

In valley control mode, minimum inductor current is regulated, not peak inductor current.

图 8-14. Valley Current Mode Operation

Copyright © 2023 Texas Instruments Incorporated

8.4.3.5 Dropout

Dropout operation is defined as any input-to-output voltage ratio that requires frequency to drop to achieve the required duty cycle. At a given clock frequency, duty cycle is limited by minimum off-time. After this limit is reached as shown in 图 8-16 if clock frequency is maintained, the output voltage falls. Instead of allowing the output voltage to drop, the LMR36502 extends the high side switch on-time past the end of the clock cycle until the needed peak inductor current is achieved. The clock is allowed to start a new cycle after peak inductor current is achieved or after a pre-determined maximum on-time, t_{ON-MAX}, of approximately 9 µs passes. As a result, after the needed duty cycle cannot be achieved at the selected clock frequency due to the existence of a minimum off-time, frequency drops to maintain regulation. As shown in 图 8-15 if input voltage is low enough so that output voltage cannot be regulated even with an on-time of t_{ON-MAX}, output voltage drops to slightly below the input voltage by V_{DROP}. For additional information on recovery from dropout, refer back to 图 8-7.

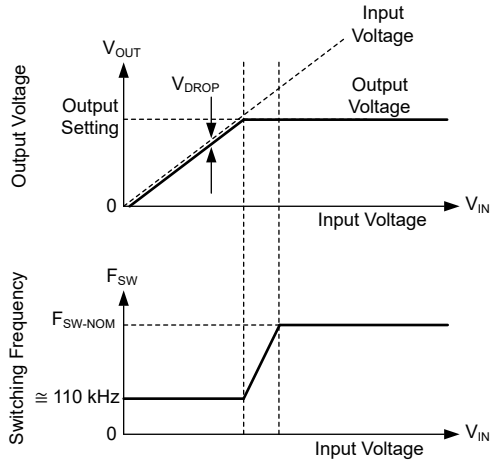

Output voltage and frequency versus input voltage: If there is little difference between input voltage and output voltage setting, the IC reduces frequency to maintain regulation. If input voltage is too low to provide the desired output voltage at approximately 110 kHz, input voltage tracks output voltage.

图 8-15. Frequency and Output Voltage in Dropout

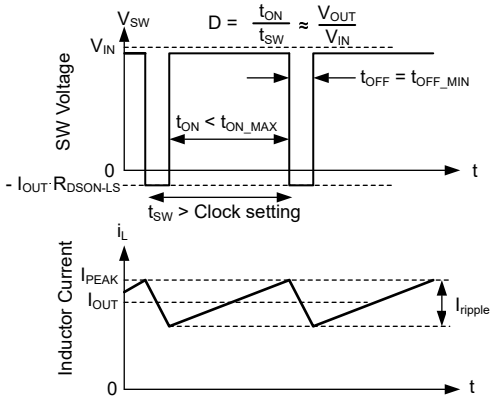

Switching waveforms while in dropout. Inductor current takes longer than a normal clock to reach the desired peak value. As a result, frequency drops. This frequency drop is limited by t_{ON-MAX}.

图 8-16. Dropout Waveforms

9 Application and Implementation

备注

Information in the following applications sections is not part of the TI component specification, and TI does not warrant its accuracy or completeness. TI’s customers are responsible for determining suitability of components for their purposes, as well as validating and testing their design implementation to confirm system functionality.

9.1 Application Information

The LMR3650x step-down DC-to-DC converter is typically used to convert a higher DC voltage to a lower DC voltage with a maximum output current of 100 mA and 150 mA. The following design procedure can be used to select components for the LMR3650x.

备注

All of the capacitance values given in the following application information refer to *effective* values unless otherwise stated. The *effective* value is defined as the actual capacitance under DC bias and temperature, not the rated or nameplate values. Use high-quality, low-ESR, ceramic capacitors with an X7R or better dielectric throughout. All high value ceramic capacitors have a large voltage coefficient in addition to normal tolerances and temperature effects. Under DC bias the capacitance drops considerably. Large case sizes and higher voltage ratings are better in this regard. To help mitigate these effects, multiple capacitors can be used in parallel to bring the minimum *effective* capacitance up to the required value. This usage can also ease the RMS current requirements on a single capacitor. A careful study of bias and temperature variation of any capacitor bank must be made to ensure that the minimum value of *effective* capacitance is provided.

Copyright © 2023 Texas Instruments Incorporated

9.2 Typical Application

图 9-1 shows a typical application circuit for the LMR36502. This device is designed to function over a wide range of external components and system parameters. However, the internal compensation is optimized for a certain range of external inductance and output capacitance. As a quick-start guide, 表 9-1 and 表 9-2 provide typical component values for a range of the most common output voltages.

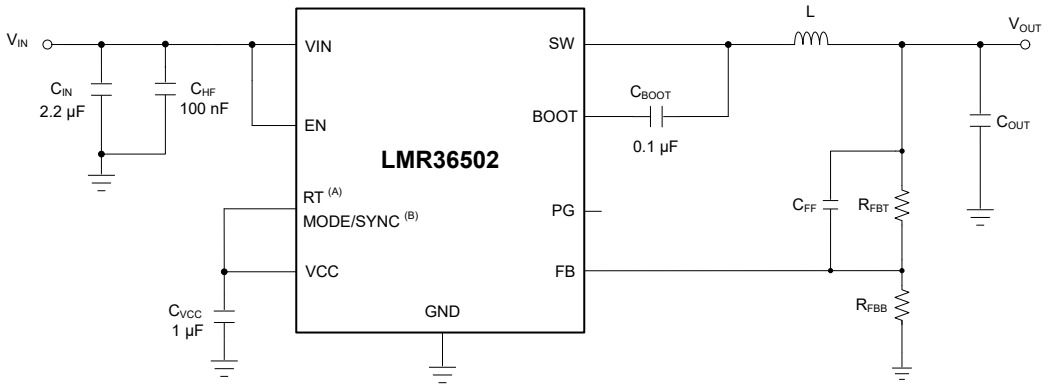

A. The RT pin is factory-set for externally adjustable switching frequency RT variants only. Tying this pin to GND results in 2.2-MHz or to VCC results in 1.1-MHz switching frequency. See 节 8.3.2 for details.

B. The MODE/SYNC pin is factory-set for fixed frequency frequency MODE/SYNC variants only. Tying this pin to GND results in AUTO mode.

图 9-1. Example Application Circuit

表 9-1. Typical External Component Values for Adjustable Output LMR36502

F_{SW} (1) (2) (kHz)	V_{OUT} (V)	L (µH)	NOMINAL C_{OUT} (RATED CAPACITANCE)	MINIMUM C_{OUT} (RATED CAPACITANCE)	R_{FBT} (Ω) (3)	R_{FBB} (Ω)	C_{IN}	C_{BOOT}	C_{VCC}
400	3.3	33	1 × 47 µF	1 × 22 µF	33.2 k	14.3 k	2.2 µF + 1 × 100 nF	100 nF	1 µF
1000	3.3	15	2 × 22 µF	1 × 22 µF	33.2 k	14.3 k	2.2 µF + 1 × 100 nF	100 nF	1 µF
400	5	47	1 × 47 µF	1 × 22 µF	49.9 k	12.4 k	2.2 µF + 1 × 100 nF	100 nF	1 µF
1000	5	22	2 × 22 µF	1 × 22 µF	49.9 k	12.4 k	2.2 µF + 1 × 100 nF	100 nF	1 µF

(1) Inductor values are calculated based on typical V_{IN} = 24 V.

(2) The switching frequencies listed here can be achieved in a number of ways depending on the device variant. For RT devices see 节 8.3.2. .

(3) For R_{FBT} and R_{FBB} values outside the range stated above, see 节 9.2.2.2.1.

表 9-2. Typical External Component Values for Fixed Output LMR36502

F_{SW} (1) (2) (kHz)	V_{OUT} (V)	L (µH)	NOMINAL C_{OUT} (RATED CAPACITANCE)	MINIMUM C_{OUT} (RATED CAPACITANCE)	R_{FBT} (Ω)	R_{FBB} (Ω) (3)	C_{IN}	C_{BOOT}	C_{VCC}
400	3.3	68	1 × 47 µF	1 × 22 µF	0	DNP	2.2 µF + 1 × 100 nF	100 nF	1 µF
2200	3.3	10	1 × 10 µF	1 × 10 µF	0	DNP	2.2 µF + 1 × 100 nF	100 nF	1 µF
400	5	82	1 × 47 µF	1 × 22 µF	0	DNP	2.2 µF + 1 × 100 nF	100 nF	1 µF
2200	5	15	1 × 10 µF	1 × 10 µF	0	DNP	2.2 µF + 1 × 100 nF	100 nF	1 µF

(1) Inductor values are calculated based on typical V_{IN} = 13.5 V.

(2) The switching frequencies listed here can be achieved in a number of ways depending on the device variant. For RT devices see 节 8.3.2.

(3) DNP = Do Not Populate.

Copyright © 2023 Texas Instruments Incorporated

9.2.1 Design Requirements

节 9.2.2 provides a detailed design procedure based on 表 9-3.

表 9-3. Detailed Design Parameters

DESIGN PARAMETER	EXAMPLE VALUE
Input voltage	24 V (6 V to 65 V)
Output voltage	3.3 V
Maximum output current	0 A to 150 mA
Switching frequency	1000 kHz

9.2.2 Detailed Design Procedure

The following design procedure applies to 图 9-1 and 表 9-2.

9.2.2.1 Choosing the Switching Frequency

The choice of switching frequency is a compromise between conversion efficiency and overall solution size. Lower switching frequency implies reduced switching losses and usually results in higher system efficiency. However, higher switching frequency allows the use of smaller inductors and output capacitors, hence, a more compact design. For this example, 1000 kHz is used.

9.2.2.2 Setting the Output Voltage

VOUT / FB of the device can be either connected directly to the output capacitor or a midpoint of a feedback resistor divider. When connected directly to the output capacitor, the device assumes that a fixed output voltage of either 3.3 V or 5 V is desired. The 3.3-V or 5-V fixed output options are factory trimmed and it is unique to a specific device. See 节 5 for the selection of fixed output voltage versions.

9.2.2.2.1 V_{OUT} / FB for Adjustable Output

If other voltages are desired, V_{OUT} / FB can be connected to a feedback resistor divider network to set the output voltage. The divider network is comprised of R_{FBT} and R_{FBB}, and closes the loop between the output voltage and the converter. The converter regulates the output voltage by holding the voltage on the V_{OUT} / FB pin equal to the internal reference voltage, V_{REF}. The converter determines whether fixed output voltage or adjustable output voltage is required by sensing the resistance of the feedback path during start-up. To ensure that the converter regulates to the desired output voltage, the typical minimum value for the parallel combination of R_{FBT} and R_{FBB} is 5 kΩ while the typical maximum value is 10 kΩ as shown in 方程式 6. 方程式 7 can be used as a starting point to determine the value of R_{FBT}. Reference 表 9-4 for a list of acceptable resistor values for various output voltages.

The resistance of the divider is a compromise between excessive noise pickup and excessive loading of the output. Smaller values of resistance reduce noise sensitivity but also reduce the light-load efficiency. The recommended maximum value for R_{FBT} is 200 kΩ. For a 3.3-V example, **LMR36502F3RPE** output pin (V_{OUT} / FB) can connect directly to the output capacitor.

$$5\ k\Omega\ <\ R_{FBT}\,||\,R_{FBB}\ \leq 10\ k\Omega \tag{6}$$

$$R_{FBT} \leq 10\ k\Omega \times \frac{V_{OUT}}{1\ V} \tag{7}$$

表 9-4. Recommended Feedback Resistor Values for Various Output Voltages

V_{OUT} (V)	R_{FBT} (1) (kΩ)	R_{FBB} (1) (kΩ)
1.2	10.2	51.1
2.5	24.9	16.5
3.3	33.2	14.3
5	49.9	12.4
12	110	10

Copyright © 2023 Texas Instruments Incorporated

表 9-4. Recommended Feedback Resistor Values for Various Output Voltages (continued)

V_{OUT} (V)	R_{FBT} (1) (kΩ)	R_{FBB} (1) (kΩ)
24	200	8.66

(1) R_{FBT} and R_{FBB} are based on 1% standard resistor values.

9.2.2.3 Inductor Selection

The parameters for selecting the inductor are the inductance and saturation current. The inductance is based on the desired peak-to-peak ripple current and is normally chosen to be in the range of 20% to 40% of the maximum output current. Experience shows that the best value for inductor ripple current is 30% of the maximum load current. Note that when selecting the ripple current for applications with much smaller maximum load than the maximum available from the device, use the maximum device current. 方程式 8 can be used to determine the value of inductance. The constant K is the percentage of inductor current ripple. For this example, choose K = 0.3 and find an inductance of L = 44 µH. Select the next standard value of L = 47 µH.

$$L = \frac{(V_{IN} - V_{OUT})}{f_{SW} \times K \times I_{OUT\,max}} \times \frac{V_{OUT}}{V_{IN}} \tag{8}$$

Ideally, the saturation current rating of the inductor is at least as large as the high-side switch current limit, $I_{PEAKMAX}$ (see 节 7.5). The saturation current rating of the inductor being as large as the high-side switch current limit ensures that the inductor does not saturate, even during a short circuit on the output. When the inductor core material saturates, the inductance falls to a very low value, causing the inductor current to rise very rapidly. Although the valley current limit, I_{VALMAX}, is designed to reduce the risk of current runaway, a saturated inductor can cause the current to rise to high values very rapidly. This high rise can lead to component damage. Do not allow the inductor to saturate. Inductors with a ferrite core material have very *hard* saturation characteristics, but usually have lower core losses than powdered iron cores. Powered iron cores exhibit a *soft* saturation, allowing some relaxation in the current rating of the inductor. However, they have more core losses at frequencies above about 1 MHz. In any case, the inductor saturation current must not be less than the maximum peak inductor current at full load.

To avoid subharmonic oscillation, the inductance value must not be less than that given in 方程式 9:

$$L_{MIN} \geq 2.5 \times \frac{V_{OUT}}{f_{sw}} \tag{9}$$

The maximum inductance is limited by the minimum current ripple for the current mode control to perform correctly. As a rule-of-thumb, the minimum inductor ripple current must be no less than about 10% of the device maximum rated current under nominal conditions.

9.2.2.4 Output Capacitor Selection

The current mode control scheme of the LM36502 devices allows operation over a wide range of output capacitance. The output capacitor bank is usually limited by the load transient requirements and stability rather than the output voltage ripple. Please refer to 节 9.2 for typical output capacitor value for 3.3-V and 5-V output voltages. Based on 表 9-2, for a 3.3-V output design, you can choose the recommended 1 × 22-µF ceramic output capacitor for this example. For other designs with other output voltages, WEBENCH can be used as a starting point for selecting the value of output capacitor.

In practice, the output capacitor has the most influence on the transient response and loop-phase margin. Load transient testing and bode plots are the best way to validate any given design and must always be completed before the application goes into production. In addition to the required output capacitance, a small ceramic placed on the output can help reduce high-frequency noise. Small-case size ceramic capacitors in the range of 1 nF to 100 nF can be very helpful in reducing spikes on the output caused by inductor and board parasitics.

Limit the maximum value of total output capacitance to about 10 times the design value, or 1000 µF, whichever is smaller. Large values of output capacitance can adversely affect the start-up behavior of the regulator as well

Copyright © 2023 Texas Instruments Incorporated

as the loop stability. If values larger than noted here must be used, then a careful study of start-up at full load and loop stability must be performed.

Copyright © 2023 Texas Instruments Incorporated

9.2.2.5 Input Capacitor Selection

The ceramic input capacitors provide a low impedance source to the regulator in addition to supplying the ripple current and isolating switching noise from other circuits. A minimum ceramic capacitance of 2.2 µF is required on the input of the LMR36502. This capacitance must be rated for at least the maximum input voltage that the application requires, preferably twice the maximum input voltage. This capacitance can be increased to help reduce input voltage ripple and maintain the input voltage during load transients. In addition, a small case size 100-nF ceramic capacitor must be used at the input, as close a possible to the regulator. This provides a high frequency bypass for the control circuits internal to the device. For this example a 2.2-µF, 100-V, X7R (or better) ceramic capacitor is chosen. The 100 nF must also be rated at 100 V with an X7R dielectric.

Using an electrolytic capacitor on the input in parallel with the ceramics is desirable. This statement is especially true if long leads or traces are used to connect the input supply to the regulator. The moderate ESR of this capacitor can help damp any ringing on the input supply caused by the long power leads. The use of this additional capacitor also helps with voltage dips caused by input supplies with unusually high impedance.

Most of the input switching current passes through the ceramic input capacitor or capacitors. The approximate RMS value of this current can be calculated from 方程式 10 and must be checked against the manufacturers' maximum ratings.

$$I_{RMS} \cong \frac{I_{OUT}}{2} \tag{10}$$

9.2.2.6 C_{BOOT}

The LMR36502 requires a bootstrap capacitor connected between the BOOT pin and the SW pin. This capacitor stores energy that is used to supply the gate drivers for the power MOSFETs. A high-quality ceramic capacitor of 100 nF and at least 16 V is required.

9.2.2.7 VCC

The VCC pin is the output of the internal LDO used to supply the control circuits of the regulator. This output requires a 1-µF, 16-V ceramic capacitor connected from VCC to GND for proper operation. In general, this output must not be loaded with any external circuitry. However, this output can be used to supply the pullup for the power-good function (see 节 8.3.3). A value in the range of 10 kΩ to 100 kΩ is a good choice in this case. The nominal output voltage on VCC is 3.15 V; see 节 7.5 for limits.

9.2.2.8 C_{FF} Selection

In some cases, a feedforward capacitor can be used across R_{FBT} to improve the load transient response or improve the loop-phase margin. The *Optimizing Transient Response of Internally Compensated DC-DC Converters with Feed forward Capacitor Application Report* is helpful when experimenting with a feedforward capacitor.

Due to the nature of the feedback detect circuitry, the value of C_{FF} must be limited to ensure that the desired output voltage is established when configuring for adjustable output voltages. Follow 方程式 11 to ensure C_{FF} remains below the maximum value.

$$C_{FF} < C_{OUT} \times \frac{\sqrt{V_{OUT}}}{1.2M\Omega} \tag{11}$$

9.2.2.9 External UVLO

In some cases, an input UVLO level different than that provided internal to the device is needed. An input UVLO level different than that provided internal to the device is can be accomplished by using the circuit shown in 图 9-2. The input voltage at which the device turns on is designated as V_{ON} while the turn-off voltage is V_{OFF}. First, a value for R_{ENB} is chosen in the range of 10 kΩ to 100 kΩ, then 方程式 12and 方程式 13 are used to calculate R_{ENT} and V_{OFF}, respectively.

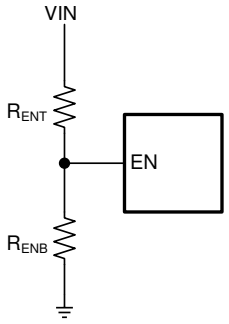

图 9-2. Setup for External UVLO Application

$$R_{ENT} = \left(\frac{V_{ON}}{V_{EN-VOUT}} - 1\right) \times R_{ENB} \quad (12)$$

$$V_{OFF} = V_{ON} \times \left(1 - \frac{V_{EN-HYS}}{V_{ENVOUT}}\right) \quad (13)$$

where

- V_{ON} is the V_{IN} turn-on voltage.
- V_{OFF} is the V_{IN} turn-off voltage.

9.2.2.10 Maximum Ambient Temperature

As with any power conversion device, the LMR3650x dissipates internal power while operating. The effect of this power dissipation is to raise the internal temperature of the converter above ambient. The internal die temperature (T_J) is a function of the ambient temperature, the power loss, and the effective thermal resistance, $R_{\theta JA}$, of the device and PCB combination. The maximum junction temperature for the LMR3650x must be limited to 150°C. This limit establishes a limit on the maximum device power dissipation and, therefore, the load current. 方程式 14 shows the relationships between the important parameters. Seeing that larger ambient temperatures (T_A) and larger values of $R_{\theta JA}$ reduce the maximum available output current is easy. The converter efficiency can be estimated by using the curves provided in this data sheet. If the desired operating conditions cannot be found in one of the curves, interpolation can be used to estimate the efficiency. Alternatively, the EVM can be adjusted to match the desired application requirements and the efficiency can be measured directly. The correct value of $R_{\theta JA}$ is more difficult to estimate. For more information, refer to the *Semiconductor and IC Package Thermal Metrics application report*.

$$I_{OUT|MAX} = \frac{\left(T_J - T_A\right)}{R_{\theta JA}} \times \frac{\eta}{1-\eta} \times \frac{1}{V_{OUT}} \quad (14)$$

where

- η is the efficiency.

The effective $R_{\theta JA}$ is a critical parameter and depends on many factors such as the following:

- Power dissipation
- Air temperature and flow
- PCB area

Copyright © 2023 Texas Instruments Incorporated

- Copper heat-sink area
- Number of thermal vias under the package
- Adjacent component placement

The IC junction temperature can be estimated for a given operating condition using 方程式 15.

$$T_J \approx T_A + R_{\theta JA} \times \text{IC Power Loss} \quad (15)$$

where

- T_J is the IC junction temperature (°C).
- T_A is the ambient temperature (°C).
- $R_{\theta JA}$ is the thermal resistance (°C/W)
- IC Power Loss is the power loss for the IC (W).

The IC Power loss mentioned above is the overall power loss minus the loss that comes from the inductor DC Resistance. The overall power loss can be approximated by using WEBENCH for a specific operating condition and temperature.

Use the following resources as guides to optimal thermal PCB design and estimating $R_{\theta JA}$ for a given application environment:

- *Thermal Design by Insight not Hindsight application report*
- *A Guide to Board Layout for Best Thermal Resistance for Exposed Pad Packages application report*
- *Semiconductor and IC Package Thermal Metrics application report*
- *Thermal Design Made Simple with LM43603 and LM43602 application report*
- *PowerPAD™ Thermally Enhanced Package application report*
- *PowerPAD™ Made Easy application report*
- *Using New Thermal Metrics application report*
- *PCB Thermal Calculator*

Copyright © 2023 Texas Instruments Incorporated

9.2.3 Application Curves

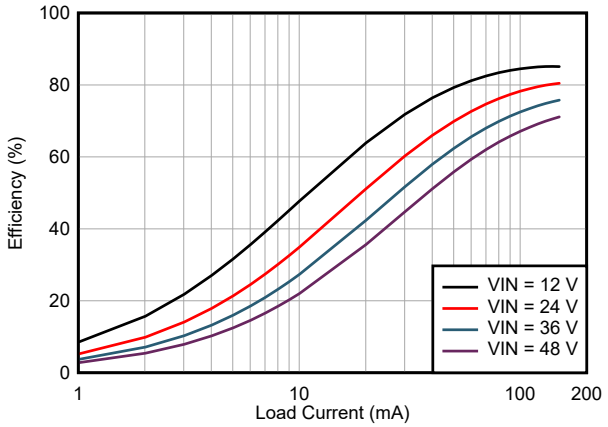

LMR36502F3 V_{OUT} = 3.3 V Fixed 1 MHz (FPWM)

图 9-3. Efficiency

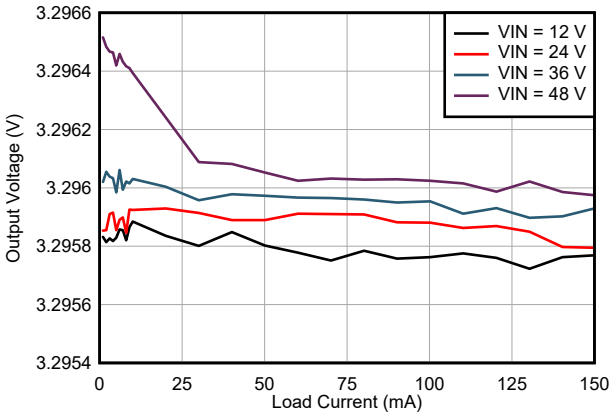

LMR36502F3 V_{OUT} = 3.3 V Fixed 1 MHz (FPWM)

图 9-4. Line and Load Regulation

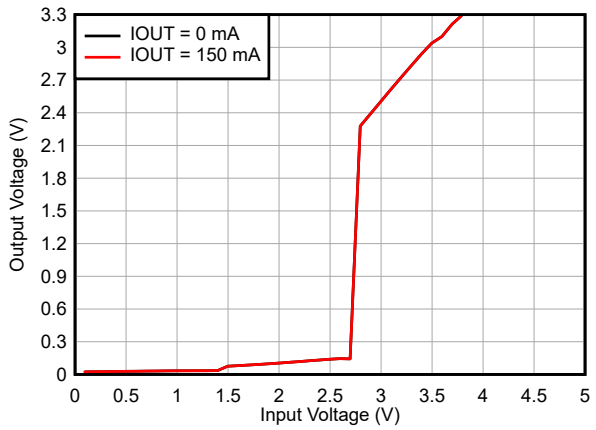

LMR36502F3 V_{OUT} = 3.3 V Fixed 1 MHz (FPWM)

图 9-5. Dropout VIN High to Low

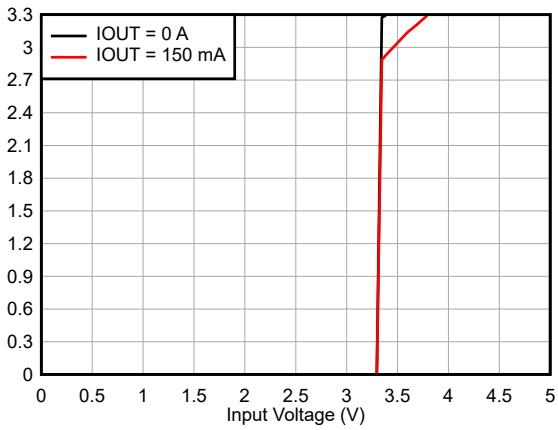

LMR36502F3 V_{OUT} = 3.3 V Fixed 1 MHz (FPWM)

图 9-6. Dropout VIN Low to High

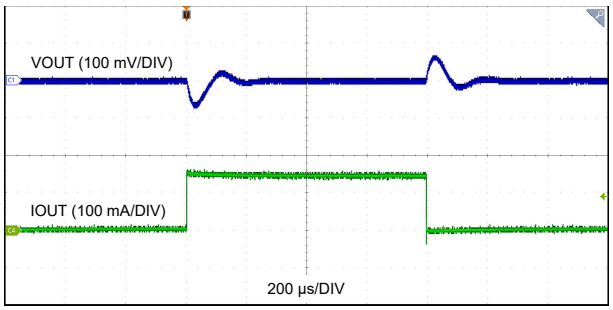

LMR36502F3 V_{OUT} = 3.3 V Fixed 1 MHz (FPWM)
V_{IN} = 24 V 0 mA to 150 mA C_{OUT} = 2 × 22 µF

图 9-7. Load Transient

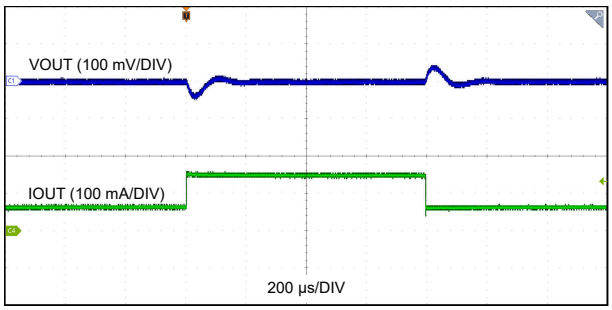

LMR36502F3 V_{OUT} = 3.3 V Fixed 1 MHz (FPWM)
V_{IN} = 24 V 0 mA to 150 mA C_{OUT} = 2 × 22 µF

图 9-8. Load Transient

Copyright © 2023 Texas Instruments Incorporated

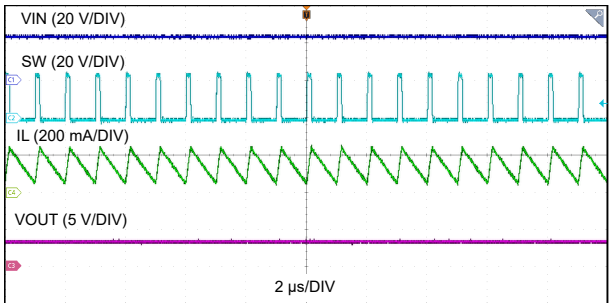

LMR36502F3 V_{OUT} = 3.3 V Fixed 1 MHz (FPWM)
V_{IN} = 24 V 150 mA C_{OUT} = 2 × 22 µF

图 9-9. Steady State Waveforms

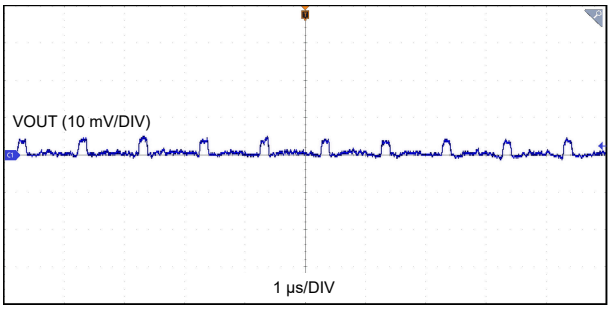

LMR36502F3 V_{OUT} = 3.3 V Fixed 1 MHz (FPWM)
V_{IN} = 24 V 150 mA C_{OUT} = 2 × 22 µF

图 9-10. Output Voltage Ripple

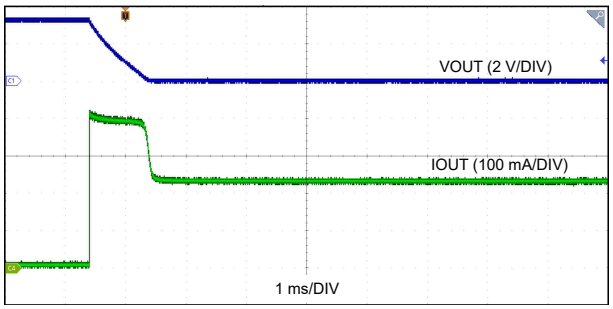

LMR36502F3 V_{OUT} = 3.3 V Fixed 1 MHz (FPWM)
V_{IN} = 24 V L = 15 µH C_{OUT} = 2 × 22 µF

图 9-11. Short Circuit Entry

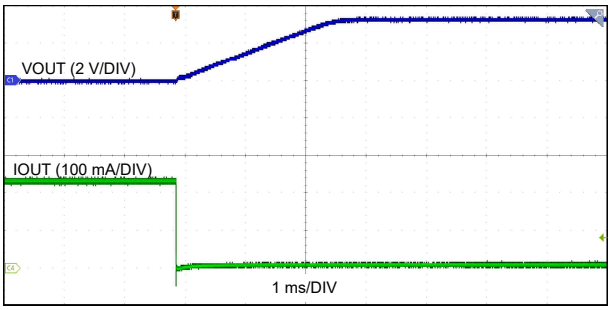

LMR36502F3 V_{OUT} = 3.3 V Fixed 1 MHz (FPWM)
V_{IN} = 24 V L = 15 µH C_{OUT} = 2 × 22 µF

图 9-12. Short Circuit Exit

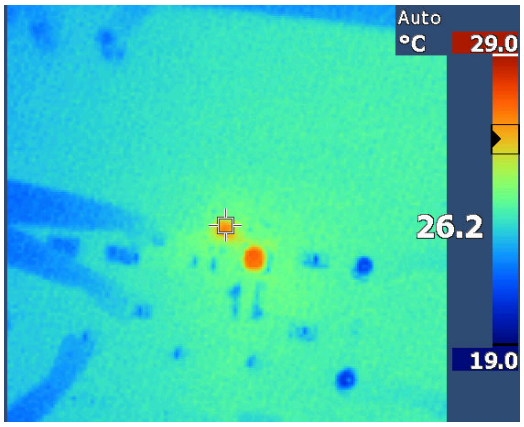

LMR36502F3 V_{OUT} = 3.3 V Fixed 1 MHz (FPWM)
V_{IN} = 36 V 150 mA C_{OUT} = 2 × 22 µF

图 9-13. Thermal Image

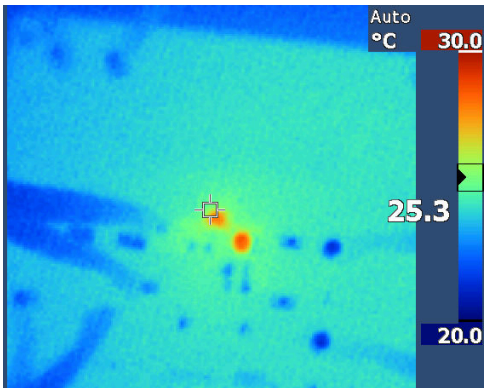

LMR36502F3 V_{OUT} = 3.3 V Fixed 1 MHz (FPWM)
V_{IN} = 48 V 150 mA C_{OUT} = 2 × 22 µF

图 9-14. Thermal Image

Copyright © 2023 Texas Instruments Incorporated

9.3 Best Design Practices

- Do not exceed the *Absolute Maximum Ratings*.
- Do not exceed the *Recommended Operating Conditions*.
- Do not exceed the ESD specifications found in *ESD (Commercial) Ratings*.
- Do not allow the EN input to float.
- Do not allow the output voltage to exceed the input voltage, nor go below ground.
- Follow all the guidelines and suggestions found in this data sheet before committing the design to production. TI application engineers are ready to help critique your design and PCB layout to help make your project a success.

9.4 Power Supply Recommendations

The characteristics of the input supply must be compatible with 节 7 found in this data sheet. In addition, the input supply must be capable of delivering the required input current to the loaded regulator. The average input current can be estimated with 方程式 16.

$$I_{IN} = \frac{V_{OUT} \times I_{OUT}}{V_{IN} \times \eta} \tag{16}$$

where

- η is the efficiency

If the regulator is connected to the input supply through long wires or PCB traces, special care is required to achieve good performance. The parasitic inductance and resistance of the input cables can have an adverse effect on the operation of the regulator. The parasitic inductance, in combination with the low-ESR, ceramic input capacitors, can form an underdamped resonant circuit, resulting in overvoltage transients at the input to the regulator. The parasitic resistance can cause the voltage at the VIN pin to dip whenever a load transient is applied to the output. If the application is operating close to the minimum input voltage, this dip can cause the regulator to momentarily shut down and reset. The best way to solve these kind of issues is to limit the distance from the input supply to the regulator or plan to use an aluminum or tantalum input capacitor in parallel with the ceramics. The moderate ESR of these types of capacitors help dampen the input resonant circuit and reduce any overshoots. A value in the range of 20 µF to 100 µF is usually sufficient to provide input damping and help to hold the input voltage steady during large load transients.

Sometimes, for other system considerations, an input filter is used in front of the regulator. This can lead to instability, as well as some of the effects mentioned above, unless it is designed carefully. The *AN-2162 Simple Success With Conducted EMI From DC/DC Converters User's Guide* provides helpful suggestions when designing an input filter for any switching regulator.

In some cases, a transient voltage suppressor (TVS) is used on the input of regulators. One class of this device has a *snap-back* characteristic (thyristor type). The use of a device with this type of characteristic is not recommended. When the TVS fires, the clamping voltage falls to a very low value. If this voltage is less than the output voltage of the regulator, the output capacitors discharge through the device back to the input. This uncontrolled current flow can damage the device.

9.5 Layout

9.5.1 Layout Guidelines

The PCB layout of any DC/DC converter is critical to the optimal performance of the design. Poor PCB layout can disrupt the operation of an otherwise good schematic design. Even if the converter regulates correctly, bad PCB layout can mean the difference between a robust design and one that cannot be mass produced. Furthermore, to a great extent, the EMI performance of the regulator is dependent on the PCB layout. In a buck converter, the most critical PCB feature is the loop formed by the input capacitor or capacitors and power ground, as shown in 图 9-15. This loop carries large transient currents that can cause large transient voltages when reacting with the trace inductance. These unwanted transient voltages disrupt the proper operation of the converter. Because of this, the traces in this loop must be wide and short, and the loop area as small as possible

Copyright © 2023 Texas Instruments Incorporated

to reduce the parasitic inductance. 图 9-16 shows a recommended layout for the critical components of the LMR3650x.

1. *Place the input capacitors as close as possible to the VIN and GND terminals.*
2. *Place bypass capacitor for VCC close to the VCC pin.* This capacitor must be placed close to the device and routed with short, wide traces to the VCC and GND pins.
3. *Use wide traces for the C_{BOOT} capacitor.* Place C_{BOOT} close to the device with short/wide traces to the BOOT and SW pins. Route the SW pin to the N/C pin and used to connect the BOOT capacitor to SW.
4. *Place the feedback divider as close as possible to the FB pin of the device.* Place R_{FBB}, R_{FBT}, and C_{FF}, if used, physically close to the device. The connections to FB and GND must be short and close to those pins on the device. The connection to V_{OUT} can be somewhat longer. However, the latter trace must not be routed near any noise source (such as the SW node) that can capacitively couple into the feedback path of the regulator.
5. *Use at least one ground plane in one of the middle layers.* This plane acts as a noise shield and as a heat dissipation path.
6. *Provide wide paths for VIN, VOUT, and GND.* Making these paths as wide and direct as possible reduces any voltage drops on the input or output paths of the converter and maximizes efficiency.
7. *Provide enough PCB area for proper heat-sinking.* As stated in 节 9.2.2.10, enough copper area must be used to ensure a low $R_{\theta JA}$, commensurate with the maximum load current and ambient temperature. The top and bottom PCB layers must be made with two ounce copper and no less than one ounce. If the PCB design uses multiple copper layers (recommended), these thermal vias can also be connected to the inner layer heat-spreading ground planes.
8. *Keep switch area small.* Keep the copper area connecting the SW pin to the inductor as short and wide as possible. At the same time, the total area of this node must be minimized to help reduce radiated EMI.

See the following PCB layout resources for additional important guidelines:

- *Layout Guidelines for Switching Power Supplies application report*
- *Simple Switcher PCB Layout Guidelines application report*
- *Construction Your Power Supply- Layout Considerations Seminar*
- *Low Radiated EMI Layout Made Simple with LM4360x and LM4600x application report*

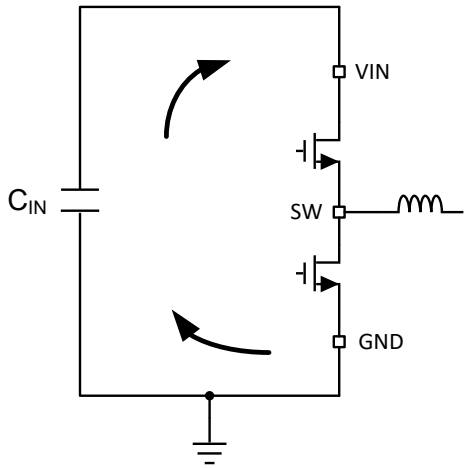

图 9-15. Current Loops with Fast Edges

9.5.1.1 Ground and Thermal Considerations

As previously mentioned, TI recommends using one of the middle layers as a solid ground plane. A ground plane provides shielding for sensitive circuits and traces as well as a quiet reference potential for the control circuitry. Connect the GND pin to the ground planes using vias next to the bypass capacitors. The GND trace, as well as the VIN and SW traces, must be constrained to one side of the ground planes. The other side of the ground plane contains much less noise; use for sensitive routes.

Copyright © 2023 Texas Instruments Incorporated

TI recommends providing adequate device heat-sinking by having enough copper near the GND pin. See 图 9-16 for example layout. Use as much copper as possible, for system ground plane, on the top and bottom layers for the best heat dissipation. Use a four-layer board with the copper thickness for the four layers, starting from the top as: 2 oz / 1 oz / 1 oz / 2 oz. A four-layer board with enough copper thickness, and proper layout, provides low current conduction impedance, proper shielding and lower thermal resistance.

9.5.2 Layout Example

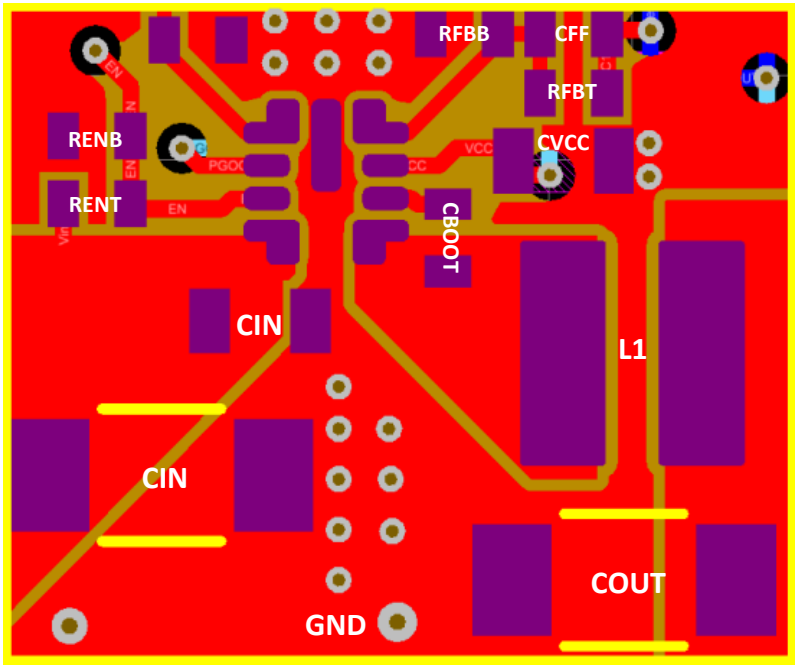

图 9-16. Example Layout

Copyright © 2023 Texas Instruments Incorporated

10 Device and Documentation Support

10.1 Device Support

10.1.1 Device Nomenclature

图 10-1 shows the device naming nomenclature of the LMR3650x. See 节 5 for the availability of each variant. Contact TI sales representatives or on TI's E2E forum for detail and availability of other options; minimum order quantities apply.

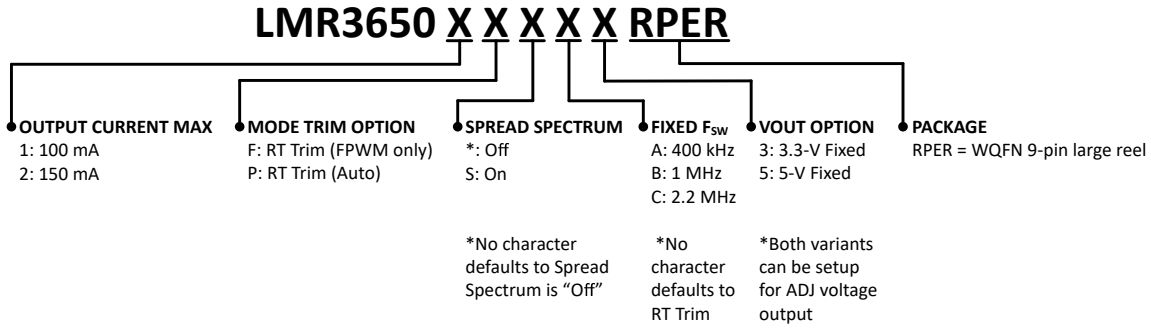

图 10-1. Device Naming Nomenclature

10.2 Documentation Support

10.2.1 Related Documentation

For related documentation see the following:

- Texas Instruments, *Thermal Design by Insight not Hindsight application report*
- Texas Instruments, *A Guide to Board Layout for Best Thermal Resistance for Exposed Pad Packages application report*
- Texas Instruments, *Semiconductor and IC Package Thermal Metrics application report*
- Texas Instruments, *Thermal Design Made Simple with LM43603 and LM43602 application report*
- Texas Instruments, *PowerPAD™ Thermally Enhanced Package application report*
- Texas Instruments, *PowerPAD™ Made Easy application report*
- Texas Instruments, *Using New Thermal Metrics application report*
- Texas Instruments, *Layout Guidelines for Switching Power Supplies application report*
- Texas Instruments, *Simple Switcher PCB Layout Guidelines application report*
- Texas Instruments, *Construction Your Power Supply- Layout Considerations Seminar*
- Texas Instruments, *Low Radiated EMI Layout Made Simple with LM4360x and LM4600x application report*

10.3 接收文档更新通知

要接收文档更新通知，请导航至 ti.com 上的器件产品文件夹。点击 *订阅更新* 进行注册，即可每周接收产品信息更改摘要。有关更改的详细信息，请查看任何已修订文档中包含的修订历史记录。

10.4 支持资源

TI E2E™ 支持论坛是工程师的重要参考资料，可直接从专家获得快速、经过验证的解答和设计帮助。搜索现有解答或提出自己的问题可获得所需的快速设计帮助。

链接的内容由各个贡献者“按原样”提供。这些内容并不构成 TI 技术规范，并且不一定反映 TI 的观点；请参阅 TI 的《使用条款》。

10.5 Trademarks

HotRod™, PowerPAD™, and TI E2E™ are trademarks of Texas Instruments.
所有商标均为其各自所有者的财产。

Copyright © 2023 Texas Instruments Incorporated

10.6 静电放电警告



静电放电 (ESD) 会损坏这个集成电路。德州仪器 (TI) 建议通过适当的预防措施处理所有集成电路。如果不遵守正确的处理和安装程序，可能会损坏集成电路。

ESD 的损坏小至导致微小的性能降级，大至整个器件故障。精密的集成电路可能更容易受到损坏，这是因为非常细微的参数更改都可能会导致器件与其发布的规格不相符。

10.7 术语表

TI 术语表　　本术语表列出并解释了术语、首字母缩略词和定义。

Copyright © 2023 Texas Instruments Incorporated

11 Mechanical, Packaging, and Orderable Information

The following pages include mechanical, packaging, and orderable information. This information is the most current data available for the designated devices. This data is subject to change without notice and revision of this document. For browser-based versions of this data sheet, refer to the left-hand navigation.

Copyright © 2023 Texas Instruments Incorporated

PACKAGING INFORMATION

Orderable part number	Status (1)	Material type (2)	Package | Pins	Package qty | Carrier	RoHS (3)	Lead finish/ Ball material (4)	MSL rating/ Peak reflow (5)	Op temp (°C)	Part marking (6)
LMR36501F3RPER	Active	Production	VQFN-HR (RPE) | 9	3000 | LARGE T&R	Yes	SN	Level-2-260C-1 YEAR	-40 to 150	CL03
LMR36501F3RPER.A	Active	Production	VQFN-HR (RPE) | 9	3000 | LARGE T&R	Yes	SN	Level-2-260C-1 YEAR	-40 to 150	CL03
LMR36501F5RPER	Active	Production	VQFN-HR (RPE) | 9	3000 | LARGE T&R	Yes	SN	Level-2-260C-1 YEAR	-40 to 150	CL04
LMR36501F5RPER.A	Active	Production	VQFN-HR (RPE) | 9	3000 | LARGE T&R	Yes	SN	Level-2-260C-1 YEAR	-40 to 150	CL04
LMR36501P3RPER	Active	Production	VQFN-HR (RPE) | 9	3000 | LARGE T&R	Yes	SN	Level-2-260C-1 YEAR	-40 to 150	CL07
LMR36501P3RPER.A	Active	Production	VQFN-HR (RPE) | 9	3000 | LARGE T&R	Yes	SN	Level-2-260C-1 YEAR	-40 to 150	CL07
LMR36501P5RPER	Active	Production	VQFN-HR (RPE) | 9	3000 | LARGE T&R	Yes	SN	Level-2-260C-1 YEAR	-40 to 150	CL08
LMR36501P5RPER.A	Active	Production	VQFN-HR (RPE) | 9	3000 | LARGE T&R	Yes	SN	Level-2-260C-1 YEAR	-40 to 150	CL08
LMR36502F3RPER	Active	Production	VQFN-HR (RPE) | 9	3000 | LARGE T&R	Yes	SN	Level-2-260C-1 YEAR	-40 to 150	CL01
LMR36502F3RPER.A	Active	Production	VQFN-HR (RPE) | 9	3000 | LARGE T&R	Yes	SN	Level-2-260C-1 YEAR	-40 to 150	CL01
LMR36502FS5RPER	Active	Production	VQFN-HR (RPE) | 9	3000 | LARGE T&R	Yes	SN	Level-2-260C-1 YEAR	-40 to 150	CL02
LMR36502FS5RPER.A	Active	Production	VQFN-HR (RPE) | 9	3000 | LARGE T&R	Yes	SN	Level-2-260C-1 YEAR	-40 to 150	CL02
LMR36502P3RPER	Active	Production	VQFN-HR (RPE) | 9	3000 | LARGE T&R	Yes	SN	Level-2-260C-1 YEAR	-40 to 150	CL05
LMR36502P3RPER.A	Active	Production	VQFN-HR (RPE) | 9	3000 | LARGE T&R	Yes	SN	Level-2-260C-1 YEAR	-40 to 150	CL05
LMR36502PS5RPER	Active	Production	VQFN-HR (RPE) | 9	3000 | LARGE T&R	Yes	SN	Level-2-260C-1 YEAR	-40 to 150	CL06
LMR36502PS5RPER.A	Active	Production	VQFN-HR (RPE) | 9	3000 | LARGE T&R	Yes	SN	Level-2-260C-1 YEAR	-40 to 150	CL06

(1) **Status:** For more details on status, see our product life cycle.

(2) **Material type:** When designated, preproduction parts are prototypes/experimental devices, and are not yet approved or released for full production. Testing and final process, including without limitation quality assurance, reliability performance testing, and/or process qualification, may not yet be complete, and this item is subject to further changes or possible discontinuation. If available for ordering, purchases will be subject to an additional waiver at checkout, and are intended for early internal evaluation purposes only. These items are sold without warranties of any kind.

(3) **RoHS values:** Yes, No, RoHS Exempt. See the TI RoHS Statement for additional information and value definition.

(4) **Lead finish/Ball material:** Parts may have multiple material finish options. Finish options are separated by a vertical ruled line. Lead finish/Ball material values may wrap to two lines if the finish value exceeds the maximum column width.

(5) **MSL rating/Peak reflow:** The moisture sensitivity level ratings and peak solder (reflow) temperatures. In the event that a part has multiple moisture sensitivity ratings, only the lowest level per JEDEC standards is shown. Refer to the shipping label for the actual reflow temperature that will be used to mount the part to the printed circuit board.

(6) **Part marking:** There may be an additional marking, which relates to the logo, the lot trace code information, or the environmental category of the part.

Multiple part markings will be inside parentheses. Only one part marking contained in parentheses and separated by a "~" will appear on a part. If a line is indented then it is a continuation of the previous line and the two combined represent the entire part marking for that device.

Important Information and Disclaimer: The information provided on this page represents TI's knowledge and belief as of the date that it is provided. TI bases its knowledge and belief on information provided by third parties, and makes no representation or warranty as to the accuracy of such information. Efforts are underway to better integrate information from third parties. TI has taken and continues to take reasonable steps to provide representative and accurate information but may not have conducted destructive testing or chemical analysis on incoming materials and chemicals. TI and TI suppliers consider certain information to be proprietary, and thus CAS numbers and other limited information may not be available for release.

In no event shall TI's liability arising out of such information exceed the total purchase price of the TI part(s) at issue in this document sold by TI to Customer on an annual basis.

TAPE AND REEL INFORMATION

REEL DIMENSIONS

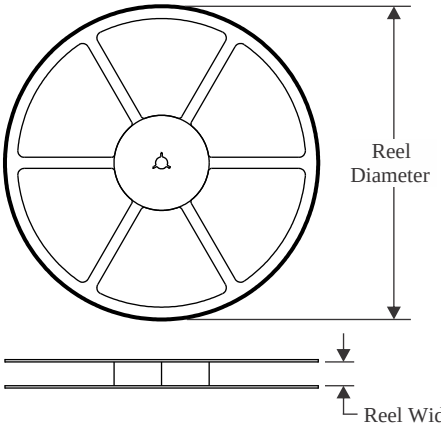

TAPE DIMENSIONS

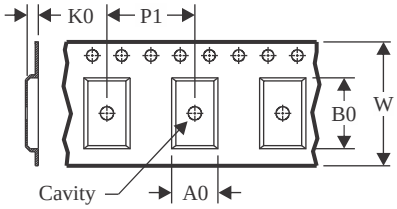

A0	Dimension designed to accommodate the component width
B0	Dimension designed to accommodate the component length
K0	Dimension designed to accommodate the component thickness
W	Overall width of the carrier tape
P1	Pitch between successive cavity centers

QUADRANT ASSIGNMENTS FOR PIN 1 ORIENTATION IN TAPE

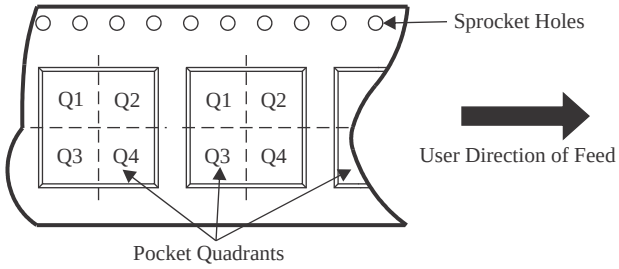

*All dimensions are nominal

Device	Package Type	Package Drawing	Pins	SPQ	Reel Diameter (mm)	Reel Width W1 (mm)	A0 (mm)	B0 (mm)	K0 (mm)	P1 (mm)	W (mm)	Pin1 Quadrant
LMR36501F3RPER	VQFN-HR	RPE	9	3000	180.0	8.4	2.3	2.3	1.15	4.0	8.0	Q2
LMR36501F5RPER	VQFN-HR	RPE	9	3000	180.0	8.4	2.3	2.3	1.15	4.0	8.0	Q2
LMR36501P3RPER	VQFN-HR	RPE	9	3000	180.0	8.4	2.3	2.3	1.15	4.0	8.0	Q2
LMR36501P5RPER	VQFN-HR	RPE	9	3000	180.0	8.4	2.3	2.3	1.15	4.0	8.0	Q2
LMR36502F3RPER	VQFN-HR	RPE	9	3000	180.0	8.4	2.3	2.3	1.15	4.0	8.0	Q2
LMR36502FS5RPER	VQFN-HR	RPE	9	3000	180.0	8.4	2.3	2.3	1.15	4.0	8.0	Q2
LMR36502P3RPER	VQFN-HR	RPE	9	3000	180.0	8.4	2.3	2.3	1.15	4.0	8.0	Q2
LMR36502PS5RPER	VQFN-HR	RPE	9	3000	180.0	8.4	2.3	2.3	1.15	4.0	8.0	Q2

TAPE AND REEL BOX DIMENSIONS

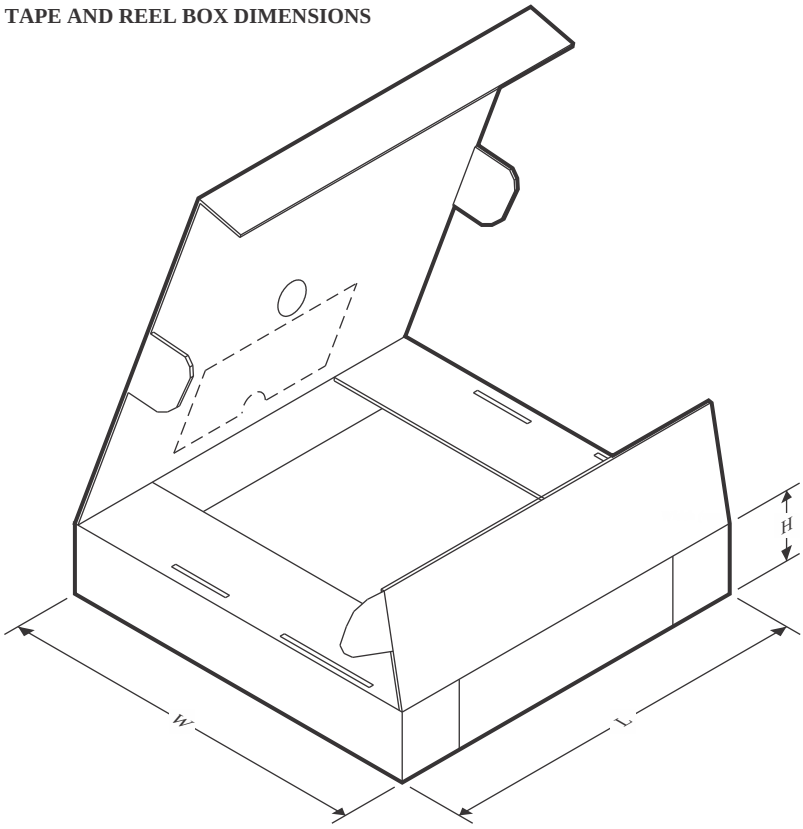

*All dimensions are nominal

Device	Package Type	Package Drawing	Pins	SPQ	Length (mm)	Width (mm)	Height (mm)
LMR36501F3RPER	VQFN-HR	RPE	9	3000	210.0	185.0	35.0
LMR36501F5RPER	VQFN-HR	RPE	9	3000	210.0	185.0	35.0
LMR36501P3RPER	VQFN-HR	RPE	9	3000	210.0	185.0	35.0
LMR36501P5RPER	VQFN-HR	RPE	9	3000	210.0	185.0	35.0
LMR36502F3RPER	VQFN-HR	RPE	9	3000	210.0	185.0	35.0
LMR36502FS5RPER	VQFN-HR	RPE	9	3000	210.0	185.0	35.0
LMR36502P3RPER	VQFN-HR	RPE	9	3000	210.0	185.0	35.0
LMR36502PS5RPER	VQFN-HR	RPE	9	3000	210.0	185.0	35.0

GENERIC PACKAGE VIEW

RPE 9

VQFN-HR - 1.0 mm max height

2 x 2, 0.5 mm pitch

PLASTIC QUAD FLATPACK - NO LEAD

This image is a representation of the package family, actual package may vary.
Refer to the product data sheet for package details.

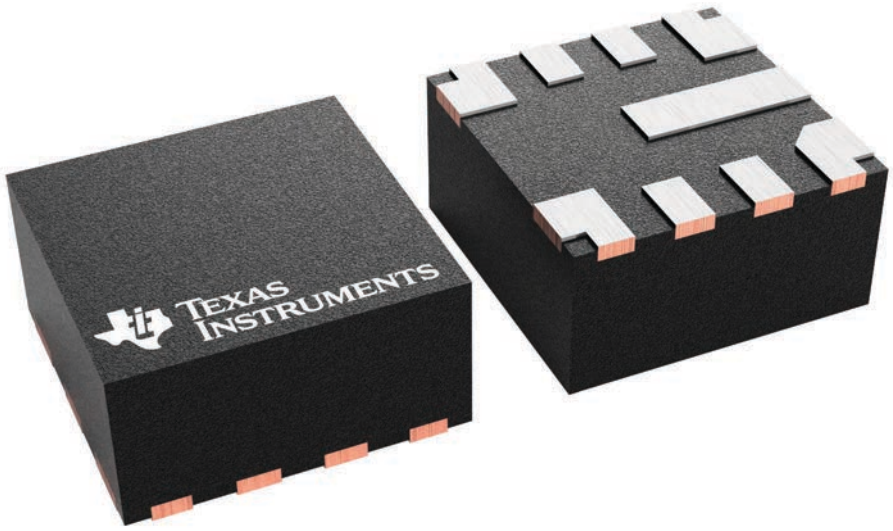

4227057/A

重要通知和免责声明

TI“按原样”提供技术和可靠性数据（包括数据表）、设计资源（包括参考设计）、应用或其他设计建议、网络工具、安全信息和其他资源，不保证没有瑕疵且不做出任何明示或暗示的担保，包括但不限于对适销性、与某特定用途的适用性或不侵犯任何第三方知识产权的暗示担保。

这些资源可供使用 TI 产品进行设计的熟练开发人员使用。您将自行承担以下全部责任：(1) 针对您的应用选择合适的 TI 产品，(2) 设计、验证并测试您的应用，(3) 确保您的应用满足相应标准以及任何其他安全、安保法规或其他要求。

这些资源如有变更，恕不另行通知。TI 授权您仅可将这些资源用于研发本资源所述的 TI 产品的相关应用。严禁以其他方式对这些资源进行复制或展示。您无权使用任何其他 TI 知识产权或任何第三方知识产权。对于因您对这些资源的使用而对 TI 及其代表造成的任何索赔、损害、成本、损失和债务，您将全额赔偿，TI 对此概不负责。

TI 提供的产品受 TI 销售条款)、TI 通用质量指南 或 ti.com 上其他适用条款或 TI 产品随附的其他适用条款的约束。TI 提供这些资源并不会扩展或以其他方式更改 TI 针对 TI 产品发布的适用的担保或担保免责声明。 除非德州仪器 (TI) 明确将某产品指定为定制产品或客户特定产品，否则其产品均为按确定价格收入目录的标准通用器件。

TI 反对并拒绝您可能提出的任何其他或不同的条款。

版权所有 © 2026，德州仪器 (TI) 公司

最后更新日期：2025 年 10 月