ZA Series
Metal-Oxide Varistors (MOVs)

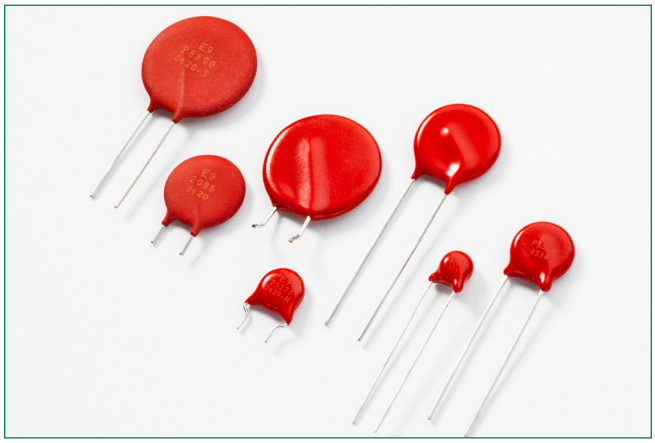

Description

The ZA Series of transient voltage surge suppressors are radial leaded varistors (MOVs) designed for use in the protection of low and medium-voltage circuits and systems. Typical applications include motor control, telecom, solenoid, and power supply circuits to protect circuit board components and maintain data integrity.

These devices are available in five model sizes: 5mm, 7mm, 10mm, 14mm and 20mm, and feature a wide V_{DC} voltage range of 5.5V to 615V.

See ZA Series Device Ratings and Specifications Table for part number and brand information.

Features and Benefits

- Lead–free, Halogen-Free and RoHS compliant
- Wide operating voltage range $V_{M(AC)RMS}$ 4V to 460V
- DC voltage ratings 5.5V to 615V
- No derating up to 85ºC ambient
- 5 model sizes available: 5, 7, 10, 14, and 20mm
- Radial lead package for hard-wired or printed circuit board designs
- Available in tape and reel or bulk pack
- Standard lead form options

Web Resources

Download ECAD models, order samples, and find technical recources at www.littelfuse.com

Agency Approvals

Agency	Agency Approval	Agency File Number
	UL1449*	E320116
	CECC 42201-006 IEC 61051-1 IEC 61051-2 IEC 60950-1 (Annex Q)**	116895
	CECC 42201-006 IEC 61051-1 IEC 61051-2 IEC 60950-1 (Annex Q)**	E1273/F

Notes:
* - Except parts V8ZAxxP and V12ZAxxP.
** - For 14mm (V120 to V180) and 20mm (V120 to V180).

Absolute Maximum Ratings

For ratings of individual members of a series, see Device Ratings and Specifications chart

Continuous	ZA Series	Units
Steady State Applied Voltage:		
AC Voltage Range ($V_{M(AC)RMS}$)	4 to 460	V
DC Voltage Range ($V_{M(DC)}$)	5.5 to 615	V
Transients:		
Peak Pulse Current (I_{TM})		
For 8/20µs Current Wave (See Figure 2)	50 to 6500	A
Single Pulse Energy Range (Note 1)		
For 10/1000µs Current Wave (W_{TM})	0.1 to 52	J
Operating Ambient Temperature Range (T_A)	-55 to +85	ºC
Storage Temperature Range (T_{STG})	-55 to +125	ºC
Temperature Coefficient (a^V) of Clamping Voltage (V_C) at Specified Test Current	<0.01	%/ºC
Hi-Pot Encapsulation (COATING Isolation Voltage Capability) (Dielectric must withstand indicated DC voltage for one minute per MIL–STD–202, Method 301)	2500	V
COATING Insulation Resistance	1000	MΩ

Caution: Stresses above those listed in "Absolute Maximum Ratings" may cause permanent damage to the device. This is a stress only rating and operation of the device at these or any other conditions above those indicated in the operational sections of this specification is not implied.

© 2024 Littelfuse, Inc.
Specifications are subject to change without notice.
Revised: GD. 01/09/24

ZA Series
Metal-Oxide Varistors (MOVs)

ZA Series Ratings & Specifications

Part Number	Branding	Model Size Disc Dia. (mm)	Maximum Rating (85°C)				Specifications (25°C)				
			Continuous		Transient		Varistor Voltage at 1mA DC Test Current		Maximum Clamping Voltage 8 x 20µs		Typical Capaci-tance f = 1MHz
			V_{RMS}	V_{DC}	Energy 10 x 1000µs	Peak Current 8 x 20µs					
			$V_{M(AC)}$	$V_{M(DC)}$	W_{TM}	I_{TM}	V_{NOM} Min	V_{NOM} Max	V_C	I_{PK}	C
			(V)	(V)	(J)	(A)	(V)	(V)	(V)	(A)	(pF)
V8ZA05P	PZ08	5	4	5.5	0.1	50	6	11	30	1	2000
V8ZA1P	P08Z1	7	4	5.5	0.4	100	6	11	22	2.5	4190
V8ZA2P	P08Z2	10	4	5.5	0.8	250	6	11	20	5	7000
V12ZA05P	PZ12	5	6	8	0.14	50	9	16	37	1	1700
V12ZA1P	P12Z1	7	6	8	0.6	100	9	16	34	2.5	3350
V12ZA2P	P12Z2	10	6	8	1.2	250	9	16	30	5	6100
V18ZA05P	PZ18	5	10	14	0.17	100	16.2	19.8	36	1	1400
V18ZA1P	P18Z1	7	10	14	0.8	250	16.2	19.8	36	2.5	2700
V18ZA2P	P18Z2	10	10	14	1.5	500	16.2	19.8	36	5	5300
V18ZA3P	P18Z3	14	10	14	3.5	1000	16.2	19.8	36	10	18870
V18ZA20P	P18Z20	20	10	14	10	2000	16.2	19.8	37	20	22000
V18ZA40P	P18Z40	20	10	14	80 (Note2)	2000	16.2 (Note 3)	19.8	37	20	22000
V22ZA05P	PZ22	5	14	18	0.2	100	19.8	24.2	43	1	1220
V22ZA1P	P22Z1	7	14	18	0.9	250	19.8	24.2	43	2.5	2375
V22ZA2P	P22Z2	10	14	18	2	500	19.8	24.2	43	5	4500
V22ZA3P	P22Z3	14	14	18	4	1000	19.8	24.2	43	10	14730
V24ZA20P	P24Z20	20	14	18	12	2000	19.8	24.2	43	20	18000
V24ZA50P	P24Z50	20	14	18 (Note 4)	100 (Note 2)	2000	20.7 (Note 3)	25.3	43	20	18000
V27ZA05P	PZ27	5	17	22	0.25	100	24.3	29.7	53	1	920
V27ZA1P	P27Z1	7	17	22	1	250	24.3	29.7	53	2.5	1875
V27ZA2P	P27Z2	10	17	22	2.5	500	24.3	29.7	53	5	3850
V27ZA4P	P27Z4	14	17	22	5	1000	24.3	29.7	53	10	11480
V27ZA20P	P27Z20	20	17	22	14	2000	24.3	29.7	53	20	13000
V27ZA60P	P27Z60	20	17	22	100 (Note 2)	2000	24.3 (Note 3)	29.7	50	20	13000
V33ZA05P	PZ33	5	20	26	0.3	100	29.7	36.3	65	1	790
V33ZA1P	P33Z1	7	20	26	1.2	250	29.7	36.3	65	2.5	1620
V33ZA2P	P33Z2	10	20	26	3	500	29.7	36.3	65	5	3495
V33ZA5P	P33Z5	14	20	26	6	1000	29.7	36.3	65	10	9290
V33ZA20P	P33Z20	20	20	26	18	2000	29.7	36.3	65	20	13000
V33ZA70P	P33Z70	20	21	27	100 (Note 2)	2000	29.7 (Note 3)	36.3	58	20	13000
V36ZA20P	P36Z20	20	23	28	20	2000	32.4	39.6	70	20	12000
V36ZA80P	P36Z80	20	23	28	100 (Note 2)	2000	32.4 (Note 3)	39.6	63	20	12000
V39ZA05P	PZ39	5	25	31	0.3	100	35.1	42.9	79	1	675
V39ZA1P	P39Z1	7	25	31	1.2	250	35.1	42.9	79	2.5	1350
V39ZA3P	P39Z3	10	25	31	3	500	35.1	42.9	76	5	3100
V39ZA6P	P39Z6	14	25	31	7.2	1000	35.1	42.9	76	10	7000
V39ZA20P	P39Z20	20	25	31	20	2000	35.1	42.9	76	20	12000
V47ZA05P	PZ47	5	30	38	0.4	100	42.3	51.7	93	1	585
V47ZA1P	P47Z1	7	30	38	1.8	250	42.3	51.7	93	2.5	1245
V47ZA3P	P47Z3	10	30	38	4.5	500	42.3	51.7	93	5	2590
V47ZA7P	P47Z7	14	30	38	8.8	1000	42.3	51.7	93	10	6270
V47ZA20P	P47Z20	20	30	38 (Note 6)	23 (Note 7)	2000	42.3	51.7	93	20	11000
V56ZA05P	PZ56	5	35	45	0.5	100	50.4	61.6	110	1	500
V56ZA2P	P56Z2	7	35	45	2.3	250	50.4	61.6	110	2.5	1035
V56ZA3P	P56Z3	10	35	45	5.5	500	50.4	61.6	110	5	2150
V56ZA8P	P56Z8	14	35	45	10	1000	50.4	61.6	110	10	4840
V56ZA20P	P56Z20	20	35	45	30	2000	50.4	61.6	110	20	10000
V68ZA05P	PZ68	5	40	56	0.6	100	61.2	74.8	135	1	400

© 2024 Littelfuse, Inc.
Specifications are subject to change without notice.
Revised: GD. 01/09/24

ZA Series
Metal-Oxide Varistors (MOVs)

ZA Series Ratings & Specifications (Continued...)

Part Number	Branding	Model Size Disc Dia. (mm)	Maximum Rating (85°C)				Specifications (25°C)				
			Continuous		Transient		Varistor Voltage at 1mA DC Test Current		Maximum Clamping Voltage 8 x 20µs		Typical Capaci-tance f = 1MHz
			V_{RMS}	V_{DC}	Energy 10 x 1000µs	Peak Current 8 x 20µs					
			$V_{M(AC)}$	$V_{M(DC)}$	W_{TM}	I_{TM}	V_{NOM} Min	V_{NOM} Max	V_C	I_{PK}	C
			(V)	(V)	(J)	(A)	(V)	(V)	(V)	(A)	(pF)
V68ZA2P	P68Z2	7	40	56	3	250	61.2	74.8	135	2.5	910
V68ZA3P	P68Z3	10	40	56	6.5	500	61.2	74.8	135	5	1850
V68ZA10P	P68Z10	14	40	56	13	1000	61.2	74.8	135	10	3870
V68ZA20P	P68Z20	20	40	56	33	2000	61.2	74.8	135	20	9000
V82ZA05P	PZ82	5	50	68	2	400	73.8	90.2	135	5	355
V82ZA2P	P82Z2	7	50	68	4	1200	73.8	90.2	135	10	700
V82ZA4P	P82Z4	10	50	68	8	2500	73.8	90.2	135	25	1485
V82ZA12P	P82Z12	14	50	68	15	4500	73.8	90.2	145	50	3380
V82ZA20P	P82Z20	20	50	68	25	6500	73.8	90.2	145	100	7000
V100ZA05P	PZ100	5	60	81	2.5	400	90	110	165	5	310
V100ZA3P	P100Z	7	60	81	5	1200	90	110	165	10	600
V100ZA4P	P100Z4	10	60	81	10	2500	90	110	165	25	1200
V100ZA15P	P100Z15	14	60	81	20	4500	90	110	175	50	2900
V100ZA20P	P100Z20	20	60	81	30	6500	90	110	175	100	6500
V120ZA05P	PZ120	5	75	102	3	400	108	132	205	5	250
V120ZA1P	P120Z	7	75	102	6	1200	108	132	205	10	515
V120ZA4P	P120Z4	10	75	102	12	2500	108	132	200	25	1100
V120ZA6P	P120Z6	14	75	102	22	4500	108	132	210	50	2450
V120ZA20P	P120Z20	20	75	102	33	6500	108	132	210	100	5000
V150ZA05P	PZ150	5	92	127	4	400	135	165	250	5	190
V150ZA1P	PZ051	7	95	127	8	1200	135	165	250	10	460
V150ZA4P	P150Z4	10	95	127	15	2500	135	165	250	25	860
V150ZA8P	P150Z8	14	95	127	20	4500	135	165	250	50	1910
V150ZA20P	P150Z20	20	95	127	45	6500	135	165	250	100	3500
V180ZA05P	PZ180	5	110	153	5	400	162	198	295	5	100
V180ZA1P	P180Z	7	115	153	10	1200	162	198	300	10	320
V180ZA5P	P180Z5	10	115	153	18	2500	162	198	300	25	465
V180ZA10P	P180Z10	14	115	153	35	4500	162	198	300	50	1190
V180ZA20P	P180Z20	20	115	153	52	6500	162	198	300	100	2400
V205ZA05P	PZ205	5	130	170	5.5	400	184.5	225.5	340	5	100
V220ZA05P	PZ220	5	140	180	6	400	198	242	360	5	95
†V240ZA05P	PZ240	5	150	200	7	400	216	264	395	5	90
†V270ZA05P	PZ270	5	175	225	7.5	400	243	297	455	5	75
†V330ZA05P	PZ330	5	210	275	9	400	306	374	540	5	70
†V360ZA05P	PZ360	5	230	300	9.5	400	324	396	595	5	60
†V390ZA05P	PZ390	5	250	330	10	400	351	429	650	5	80
†V430ZA05P	PZ430	5	275	369	11	400	387	473	710	5	75
†V470ZA05P	PZ470	5	300	385	12	400	423	517	775	5	70
†V620ZA05P	PZ620	5	385	505	13	400	558	682	1025	5	45
†V680ZA05P	PZ680	5	420	560	14	400	612	748	1120	5	40
†V715ZA05P	PZ715	5	440	585	15.5	400	643.5	786.5	1180	5	35
†V750ZA05P	PZ750	5	460	615	17	400	675	825	1240	5	30

Note:
1. Average power dissipation of transients not to exceed 0.2W, 0.25W, 0.4W, 0.6W or 1W for model sizes 5mm, 7mm, 10mm, 14mm and 20mm, respectively.
2. Energy rating (auto load dump) for impulse duration of 40ms minimum to one half of peak current, 60 sec interval (ISO7637-2 pulse 5a and ISO16750-2 Table 5A)
3. 10mA DC test current.
4. Also rated to withstand 24V for 5 minutes.
5. Higher voltages available, contact Littelfuse.
6. Also rated to withstand 48V for 5 minutes.
7. Energy rating for impulse duration of 30ms minimum to one half of peak current (Auto Load Dump): 100J
8. The typical capacitance rating is the discrete component test result.

† Also Recognized to UL 1449, Transient Voltage Surge Suppressors File E320116

© 2024 Littelfuse, Inc.
Specifications are subject to change without notice.
Revised: GD. 01/09/24

ZA Series
Metal-Oxide Varistors (MOVs)

Phenolic Coating Option - ZA Series Varistors for Hi-Temperature Operating Conditions:

- Phenolic coated ZA Series devices are available with improved maximum operating temperature of 125°C
- These devices also have improved temperature cycling performance capability
- Ratings and specifications are as per standard ZA Series except Hi–Pot Encapsulation (Isolation Voltage Capability) = 500V
- To order: add 'X1347' to part number (e.g. V22ZA3PX1347)
- These devices are not UL, VDE or CECC certified
- Contact factory for further details
- Product marking:

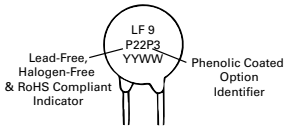

Copper Electrode Option:

- Add 'W' to the end of the part number (e.g. V240ZA05PW)
- Copper electrode option is only available for V240~V750 for ZA series.
- Product marking:

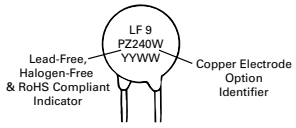

Current Energy and Power Dissipation Ratings

Should transients occur in rapid succession, the average power dissipation is the energy (watt-seconds) per pulse times the number of pulses per second. The power so developed must be within the specifications shown on the Device Ratings and Specifications Table for the specific device. The operating values of a MOV need to be derated at high temperatures as shown above. Because varistors only dissipate a relatively small amount of average power they are not suitable for repetitive applications that involve substantial amounts of average power dissipation.

Figure 1A - Power Derating for Epoxy Coated

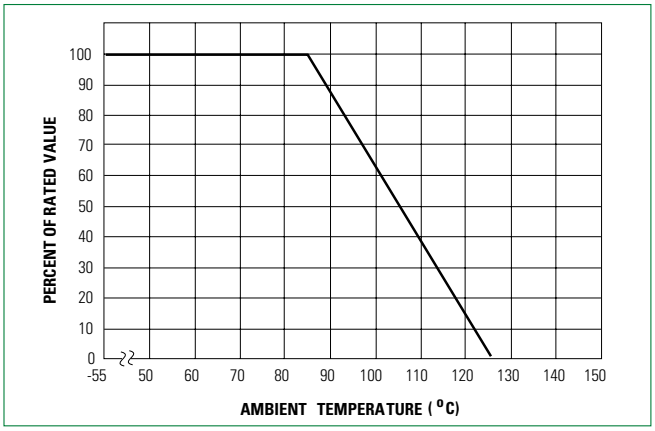

Figure 1B - Power Derating for Phenolic Coated

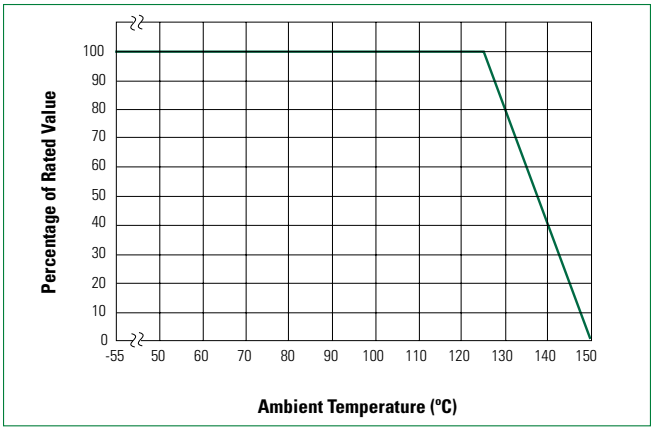

Figure 2 - Peak Pulse Current Test Waveform

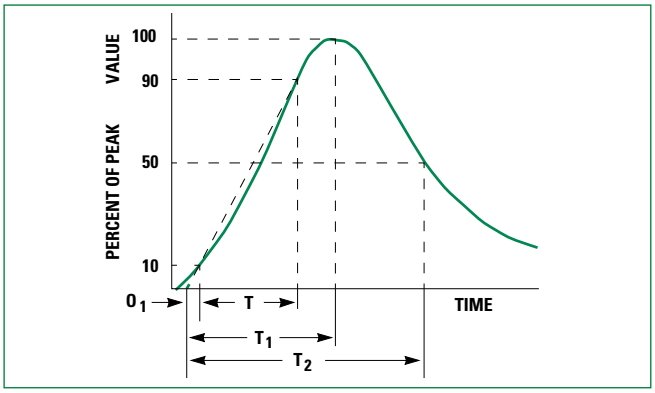

O_1 = Virtual Origin of Wave
T = Time from 10% to 90% of Peak
T_1 = Rise Time = 1.25 x T
T_2 = Decay Time

Example - For an 8/20 µs Current Waveform:
8µs = T_1 = Rise Time
20µs = T_2 = Decay Time

© 2024 Littelfuse, Inc.
Specifications are subject to change without notice.
Revised: GD. 01/09/24

ZA Series
Metal-Oxide Varistors (MOVs)

Maximum Clamping Voltage for 5mm Parts

Figure 3 - V8ZA05(P) - V68ZA05(P)

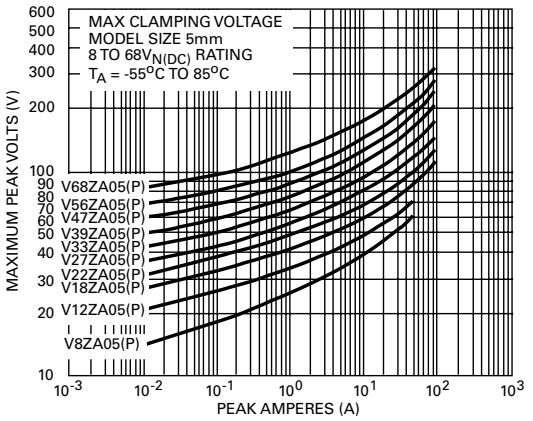

Figure 4 - V82ZA05(P) - V33ZA05(P)

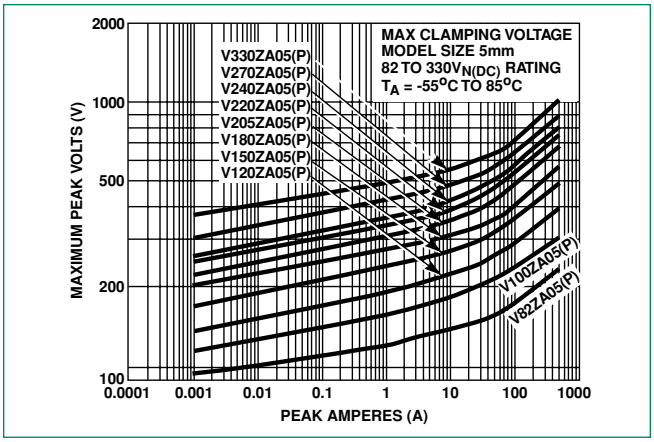

Figure 5 - V360ZA05(P) - V750ZA05(P)

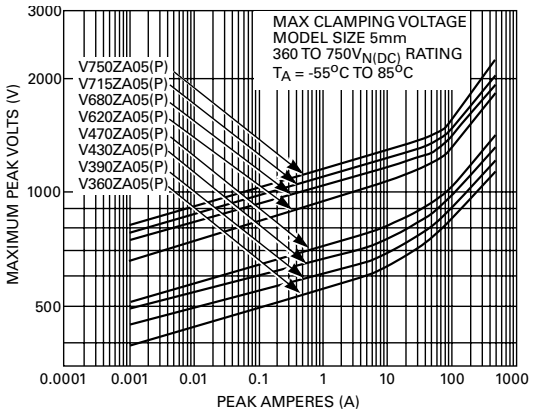

Maximum Clamping Voltage for 7mm Parts

Figure 6 - V8ZA1(P) - V68ZA2(P)

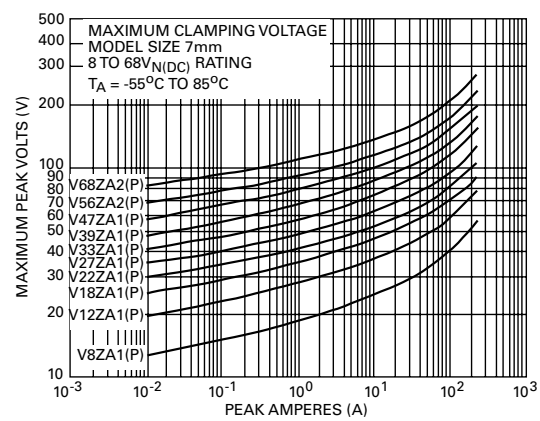

Figure 7 - V82ZA2(P) - V180ZA1(P)

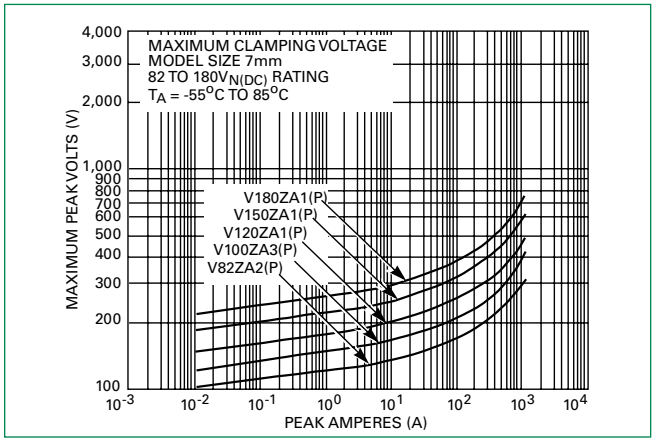

© 2024 Littelfuse, Inc.
Specifications are subject to change without notice.
Revised: GD. 01/09/24

ZA Series
Metal-Oxide Varistors (MOVs)

Maximum Clamping Voltage for 10mm Parts

Figure 8 - V8ZA2(P) - V68ZA3(P)

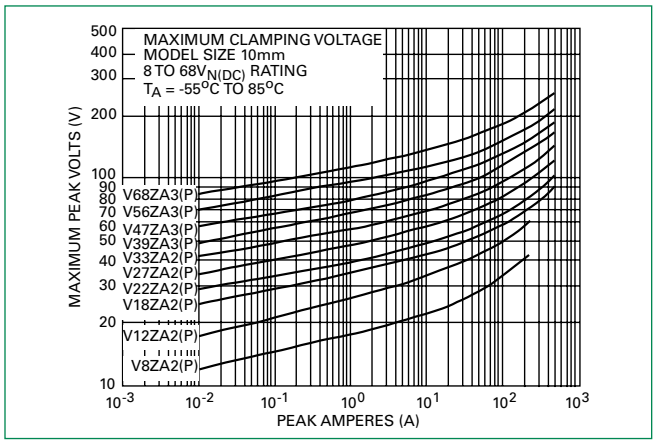

Figure 9 - V82ZA4(P) - V180ZA5(P)

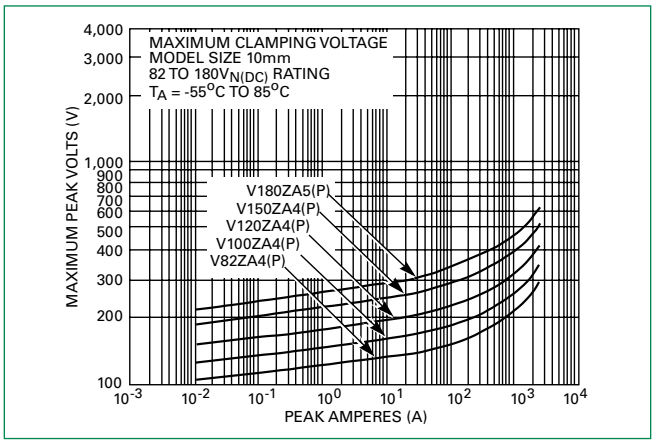

Maximum Clamping Voltage for 14mm Parts

Figure 10 - V18ZA3(P) - V68ZA10(P)

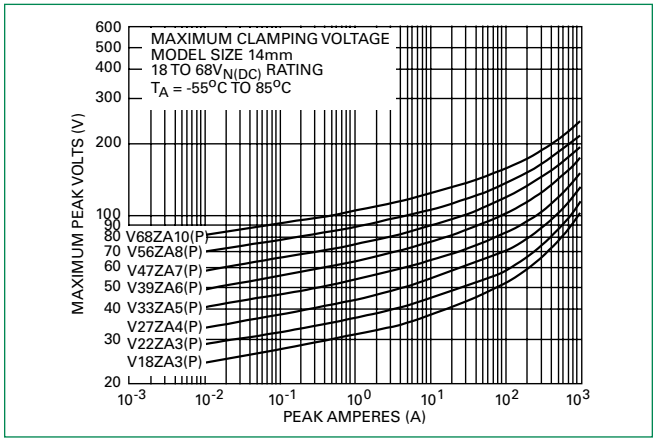

Figure 11 - V82ZA12(P) - V180ZA10(P)

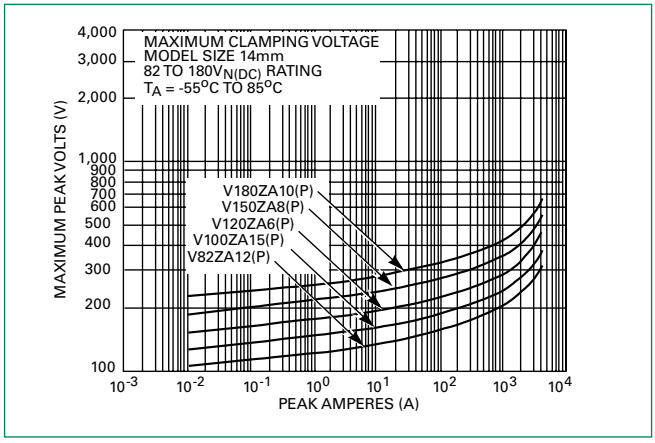

© 2024 Littelfuse, Inc.
Specifications are subject to change without notice.

ZA Series
Metal-Oxide Varistors (MOVs)

Maximum Clamping Voltage for 20mm Parts

Figure 11 - V18ZA20(P) - V36ZA80(P)

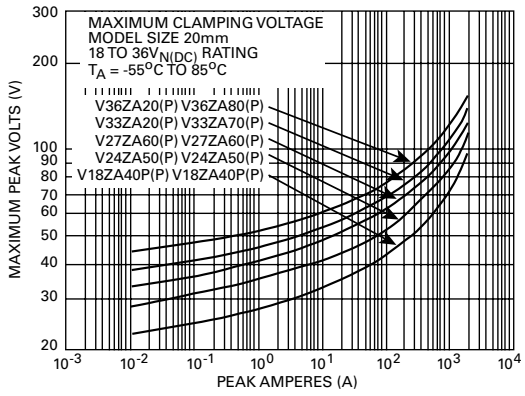

Figure 12 - V39ZA20(P) - V180ZA20(P)

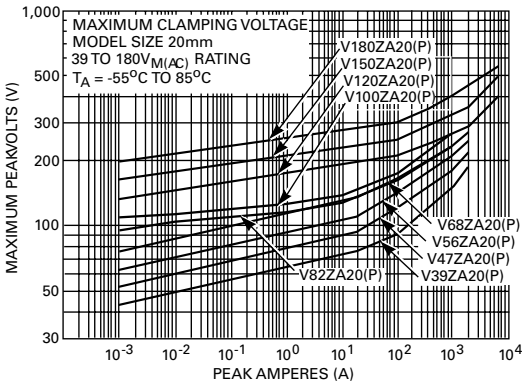

Repetitive Surge Capability for 5mm Parts

Figure 13 - V8ZA05P - V12ZA05P

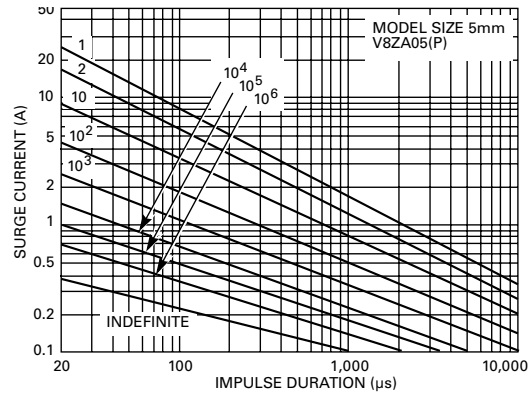

Figure 14 - V18ZA05(P) - V68ZA05(P)

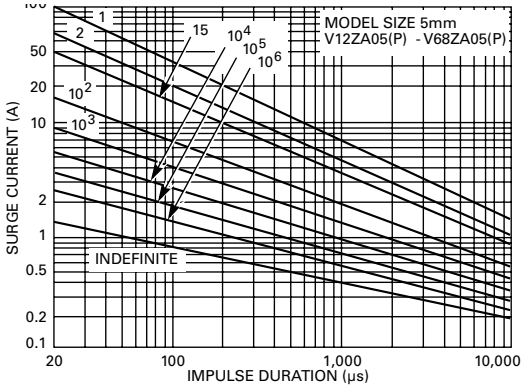

Note: Repetitive surge capability is qualified and tested based on 8/20us current waveform (not combination waveform) and UL1449 40.7.3 (Edition 4) test condition.

Figure 15 - V82ZA05(P) - V750ZA05(P)

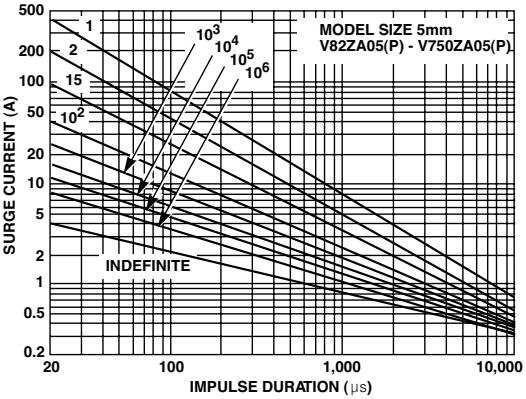

© 2024 Littelfuse, Inc.
Specifications are subject to change without notice.

ZA Series
Metal-Oxide Varistors (MOVs)

Repetitive Surge Capability for 7mm Parts

Figure 15 - V8ZA1(P) - V12ZA1(P)

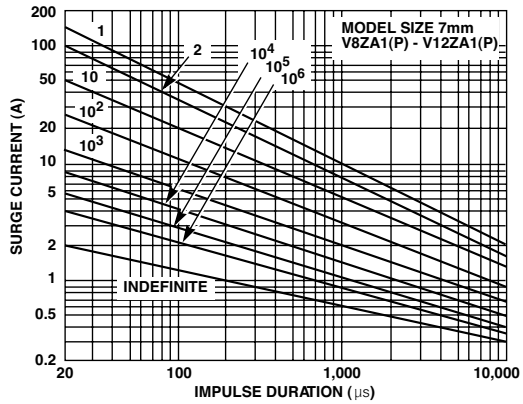

Figure 16 - V18ZA1(P) - V68ZA2(P)

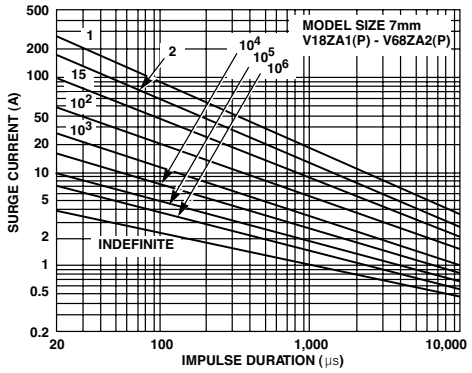

Figure 17 - V82ZA2(P) - V180ZA1(P)

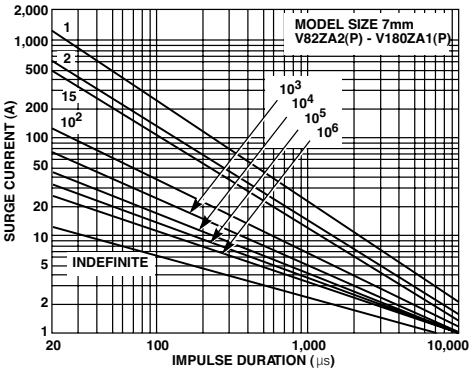

Repetitive Surge Capability for 10mm Parts

Figure 18 - V8ZA2(P) - V12ZA2(P)

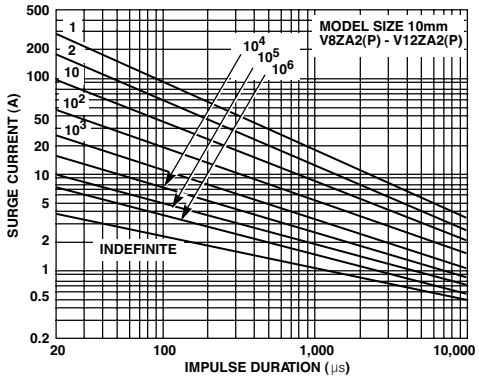

Figure 19 - V18ZA2(P) - V68ZA3(P)

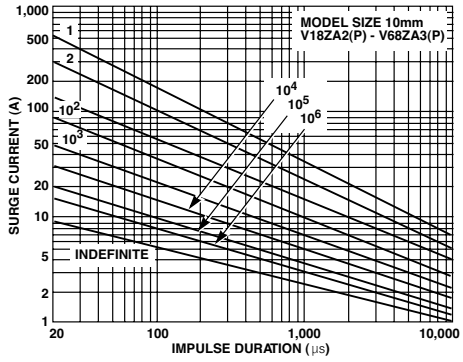

Figure 20 - V82ZA4(P) - V180ZA5(P)

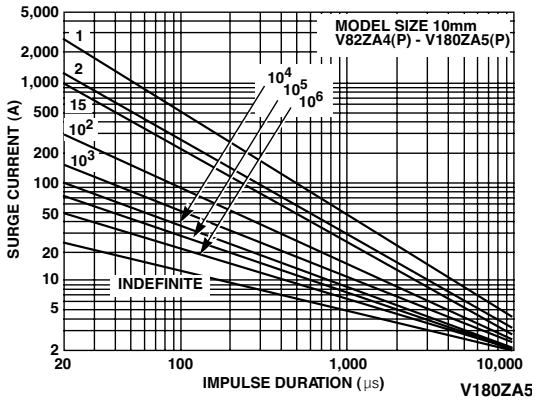

Note: Repetitive surge capability is qualified and tested based on 8/20us current waveform (not combination waveform) and UL1449 40.7.3 (Edition 4) test condition.

© 2024 Littelfuse, Inc.
Specifications are subject to change without notice.
Revised: GD. 01/09/24

ZA Series
Metal-Oxide Varistors (MOVs)

Repetitive Surge Capability for 14mm Parts

Figure 21 - V18ZA3(P) - V68ZA10(P)

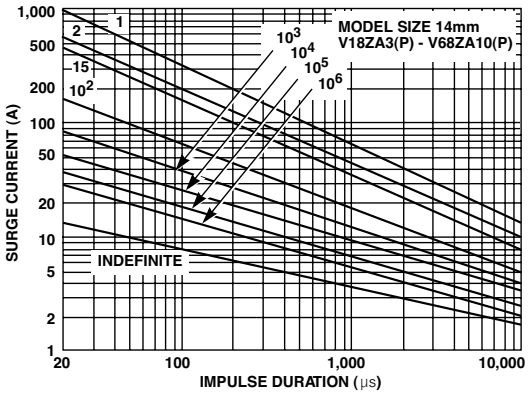

Figure 22 - V82ZA12(P) - V180ZA10(P)

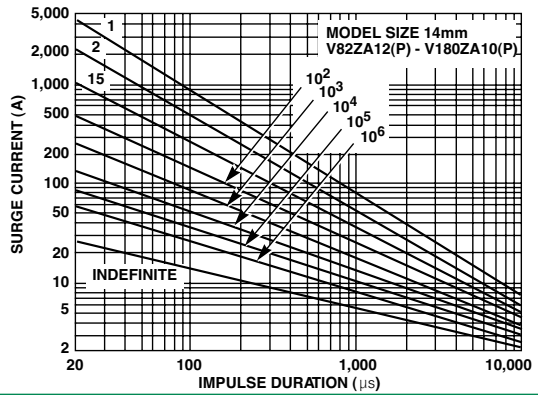

Repetitive Surge Capability for 20mm Parts

Figure 23 - V18ZA40(P) - V68ZA20(P)

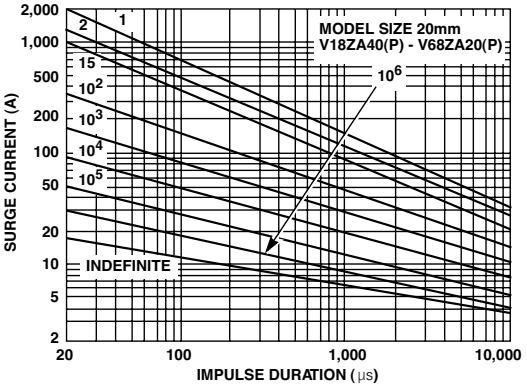

Figure 24 - V82ZA20(P) - V180ZA20(P)

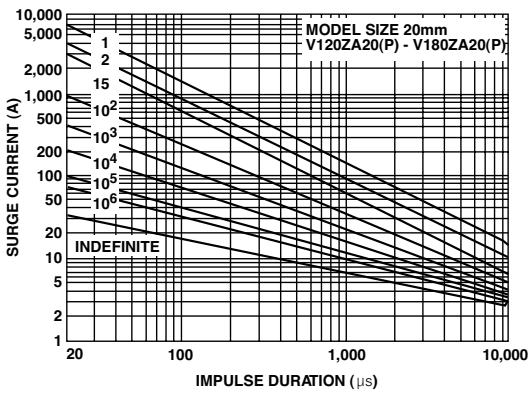

Notes:

- If pulse ratings are exceeded, a shift of $V_{N(DC)}$ (at specified current) of more then +/-10% could result. This type of shift, which normally results in a decrease of $V_{N(DC)}$, may result in the device not meeting the original published specifications, but does not prevent the device from continuing to function, and to provide ample protection.
- Repetitive surge capability is qualified and tested based on 8/20us current waveform (not combination waveform) and UL1449 40.7.3 (Edition 4) test condition.

© 2024 Littelfuse, Inc.
Specifications are subject to change without notice.
Revised: GD. 01/09/24

ZA Series
Metal-Oxide Varistors (MOVs)

Wave Solder Profile

Figure 25 - Non Lead–free Profile

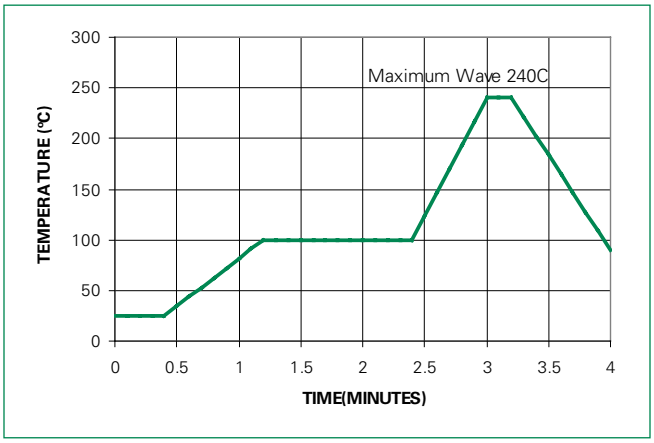

Figure 26 - Lead–free Profile

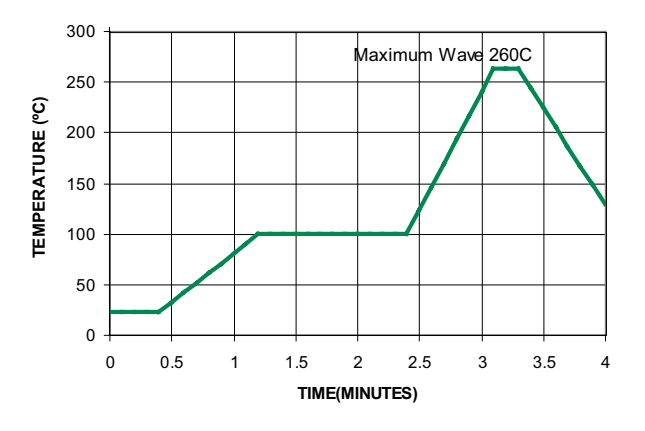

Physical Specifications

Lead Material	Copper Clad Steel Wire
Soldering Characteristics	Solderability per MIL–STD–202, Method 208
Insulating Material	Cured, flame retardant epoxy polymer meets UL94V–0 requirements
Device Labeling	Marked with LF, voltage, UL/CSA logos, and date code

Environmental Specifications

Operating Ambient Temperature Range	-55°C to +85°C
Storage Temperature Range	-55°C to +125°C
Humidity Aging	+85°C, 85% RH, 1000 hours +/-10% typical voltage change
Thermal Shock	+85°C to -40°C 5 times +/-10% typical voltage change
Solvent Resistance	MIL–STD–202, Method 215
Moisture Sensitivity	Level 1, J-STD-020

© 2024 Littelfuse, Inc.
Specifications are subject to change without notice.
Revised: GD. 01/09/24

ZA Series
Metal-Oxide Varistors (MOVs)

Product Dimensions (mm)

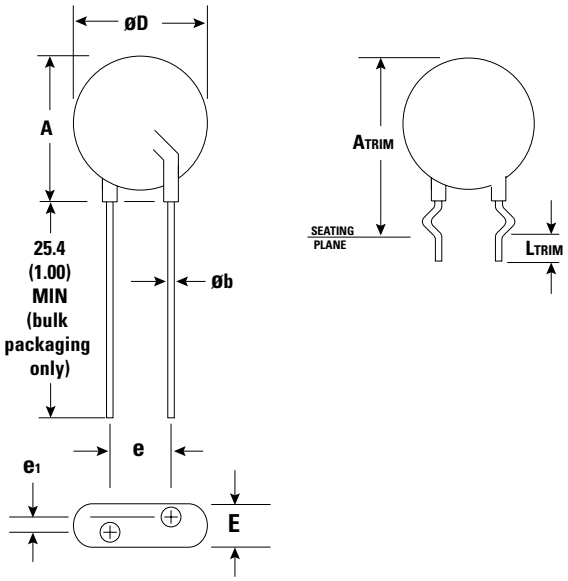

Crimped And Trimmed Lead
Radial lead types can be supplied with combination preformed crimp and trimmed leads. This option is supplied to the dimensions shown.

*Seating plane interpretation per IEC-717

To order this crimped and trimmed lead style, standard radial type model numbers are changed by replacing the model letter "ZA" with "ZC." This option is supplied in bulk only.

Example:

Standard Model	Order As
V18ZA3P	V18ZC3P

For crimped leads without trimming and any varitions to the above, contact Littelfuse.

Dimen-sion	V_{RMS} Voltage Model	5mm Size		7mm Size		10mm Size		14mm Size		20mm Size	
		Min. mm (in)	Max. mm (in)	Min. mm (in)	Max. mm (in)	Min. mm (in)	Max. mm (in)	Min. mm (in)	Max. mm (in)	Min. mm (in)	Max. mm (in)
A	All	-	10 (0.394)	-	12 (0.472)	-	16 (0.630)	-	20 (0.787)	-	26.5 (1.043)
ØD	All	-	7 (0.276)	-	9 (0.354)	-	12.5 (0.492)	-	17 (0.669)	-	23 (0.906)
e (see notes below)	All	4 (0.157)	6 (0.236)	4 (0.157)	6 (0.236)	6.5 (0.256)	8.5 (0.335)	6.5 (0.256)	8.5 (0.335)	6.5 (0.256) (note 1 below)	8.5 (0.335) (note 1 below)
e_1	V8ZA-V56ZA	1 (0.039)	3 (0.118)	1 (0.039)	3 (0.118)	1 (0.039)	3 (0.118)	1 (0.039)	3 (0.118)	1 (0.039)	3 (0.118)
	V68ZA-V100ZA	1.5 (0.059)	3.5 (0.138)	1.5 (0.059)	3.5 (0.138)	1.5 (0.059)	3.5 (0.138)	1.5 (0.059)	3.5 (0.138)	1.5 (0.059)	3.5 (0.138)
	V120ZA-V180ZA	1 (0.039)	3 (0.118)	1 (0.039)	3 (0.118)	1 (0.039)	3 (0.118)	1 (0.038)	3 (0.118)	1 (0.038)	3 (0.118)
	V205ZA-V750ZA	1.5 (0.059)	3.5 (0.138)	-	-	-	-	-	-	-	-
E	V8ZA-V56ZA	-	5 (0.197)	-	5 (0.197)	-	5 (0.197)	-	5 (0.197)	-	5 (0.197)
	V68ZA-V100ZA	-	5.6 (0.220)	-	5.6 (0.220)	-	5.6 (0.220)	-	5.6 (0.220)	-	5.6 (0.220)
	V120ZA-V180ZA	-	5 (0.197)	-	5 (0.197)	-	5 (0.197)	-	5 (0.197)	-	5 (0.197)
	V205ZA-V750ZA	-	5.6 (0.220)	-	-	-	-	-	-	-	-
Øb	All	0.585 (0.023)	0.685 (0.027)	0.585 (0.023)	0.685 (0.027)	0.76 (0.030)	0.86 (0.034)	0.76 (0.030)	0.86 (0.034)	0.76 (0.030)	0.86 (0.034)
A_{TRIM}	All	-	13.0 (0.512)	-	15 (0.591)	-	19.5 (0.768)	-	22.5 (0.886)	-	29.0 (1.142)
L_{TRIM}	All	2.41 (0.095)	4.69 (0.185)	2.41 (0.095)	4.69 (0.185)	2.41 (0.095)	4.69 (0.185)	2.41 (0.095)	4.69 (0.185)	2.41 (0.095)	4.69 (0.185)

Notes: Dimensions in millimeters, inches in parentheses.

1. For 20mm size devices, a 10mm "e" dimension option is also available. Please refer to "Ordering Notes" section "X10" option code for additional information.

2. V24ZA50(P) and V24ZC50(P) only supplied with lead spacing of 6.35mm -/+0.5mm (0.25 -/+0.0196) Dimension e = 5.85 min. Does not apply to Tape and Reel parts.

© 2024 Littelfuse, Inc.
Specifications are subject to change without notice.
Revised: GD. 01/09/24

ZA Series
Metal-Oxide Varistors (MOVs)

Tape and Reel Specifications

5 and 7mm Devices

Crimped Leads "ZT"

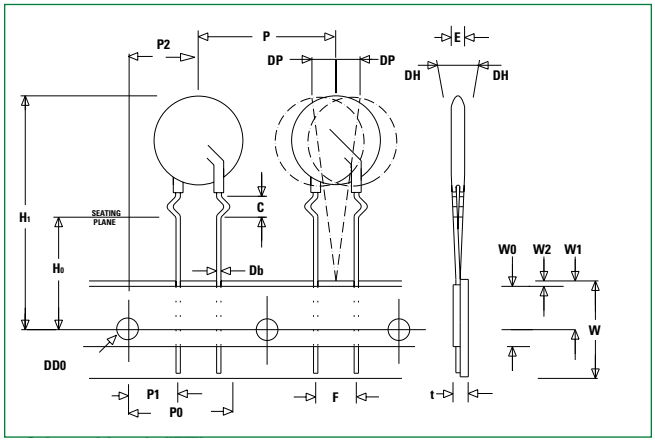

Straight Leads "ZS"

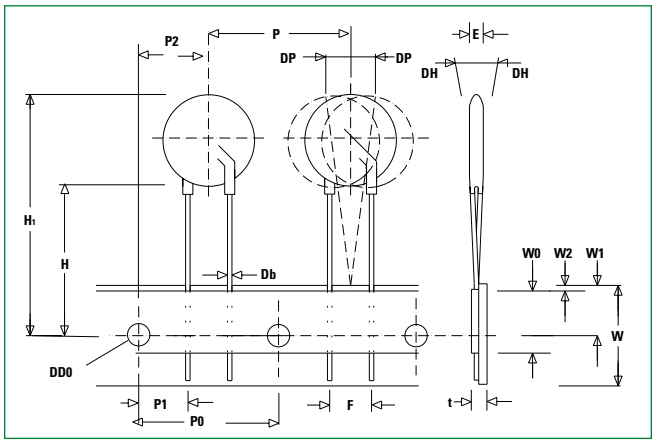

Under Crimped Leads "ZU"

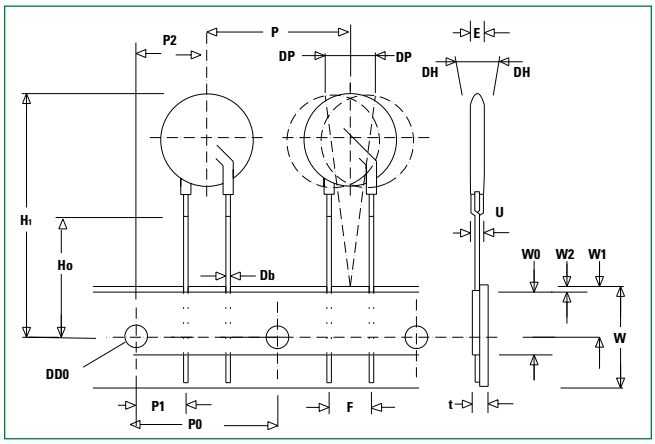

10, 14 and 20mm Devices

Crimped Leads "ZT"

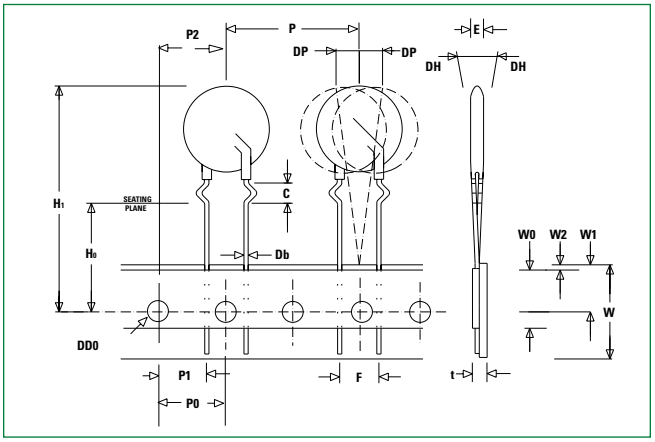

Straight Leads "ZS"

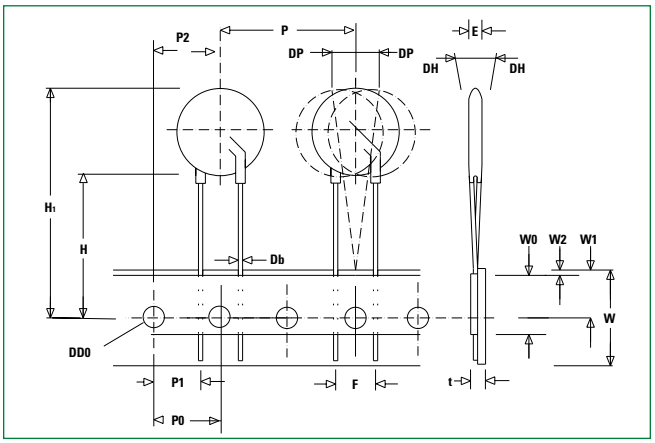

Under Crimped Leads "ZU"

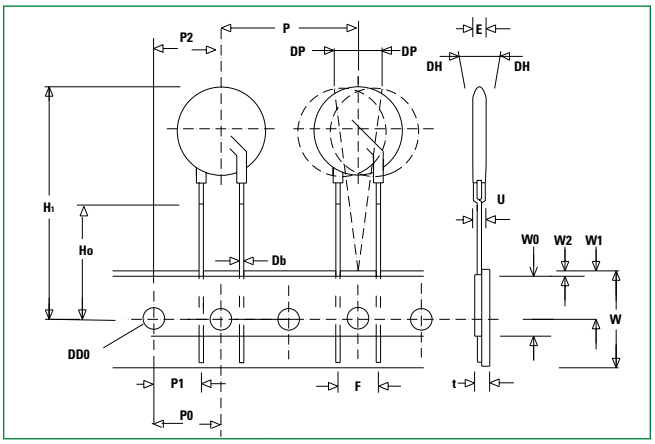

Refer to next page for dimension measurement specifics.

© 2024 Littelfuse, Inc.
Specifications are subject to change without notice.
Revised: GD. 01/09/24

ZA Series
Metal-Oxide Varistors (MOVs)

Tape and Reel Specifications (continued)

Notes:
- Radial devices on tape are supplied with crimped leads, straight leads, or under-crimped leads
- Leads are offset by product dimension e1
- Conforms to ANSI and EIA specifications
- Can be supplied to IEC Publication 286-2
- 5mm parts are available on tape and reel up to 385 VAC only

Symbol	Description	Model Size				
		5mm	7mm	10mm	14mm	20mm
P	Pitch of Component	12.7 +/- 1.0	12.7 +/- 1.0	25.4 +/- 1.0	25.4 +/- 1.0	25.4 +/- 1.0
P_0	Feed Hole Pitch	12.7 +/- 0.2	12.7 +/- 0.2	12.7 +/- 0.2	12.7 +/- 0.2	12.7 +/- 0.2
P_1	Feed Hole Center to Pitch	3.85 +/- 0.7	3.85 +/- 0.7	8.85 +/- 0.7	8.85 +/- 0.7	8.85 +/- 0.7
P_2	Hole Center to Component Center	6.35 +/- 1.0	6.35 +/- 1.0	12.7 +/- 0.7	12.7 +/- 0.7	12.7 +/- 0.7
F	Lead to Lead Distance	5.0 +/- 1.0	5.0 +/-1.0	7.5 +/- 1.0	7.5 +/- 1.0	7.5 +/- 1.0
h	Component Alignment	2.0 Max	2.0 Max	2.0 Max	2.0 Max	2.0 Max
W	Tape Width	18.0 +1.0 / -0.5	18.0 +1.0 / -0.5	18.0 +1.0 / -0.5	18.0 +1.0 / -0.5	18.0 +1.0 / -0.5
W_0	Hold Down Tape Width	12.0 +/- 0.3	12.0 +/- 0.3	12.0 +/- 0.3	12.0 +/- 0.3	12.0 +/- 0.3
W_1	Hole Position	9.0 +0.75 / -0.50	9.0 +0.75 / -0.50	9.0 +0.75 / -0.50	9.0 +0.75 / -0.50	9.0 +0.75 / -0.50
W_2	Hold Down Tape Position	0.5 Max	0.5 Max	0.5 Max	0.5 Max	0.5 Max
H	Height from Tape Center to Component Base	18.0 +2.0 / -0.0	18.0 +2.0 / -0.0	18.0 +2.0 / -0.0	18.0 +2.0 / -0.0	18.0 +2.0 / -0.0
H_0	Seating Plane Height	16.0 +/- 0.5	16.0 +/- 0.5	16.0 +/- 0.5	16.0 +/- 0.5	16.0 +/- 0.5
H_1	Component Height	29.0 Max	32.0 Max	36.0 Max	40.0 Max	46.5 Max
D_0	Feed Hole Diameter	4.0 +/- 0.2	4.0 +/- 0.2	4.0 +/- 0.2	4.0 +/- 0.2	4.0 +/- 0.2
t	Total Tape Thickness	0.7 +/- 0.2	0.7 +/- 0.2	0.7 +/- 0.2	0.7 +/- 0.2	0.7 +/- 0.2
U	Undercrimp Width	8.0 Max	8.0 Max	8.0 Max	8.0 Max	8.0 Max
p	Component Alignment	3° Max	3° Max	3° Max	3° Max	3° Max

Part Numbering System

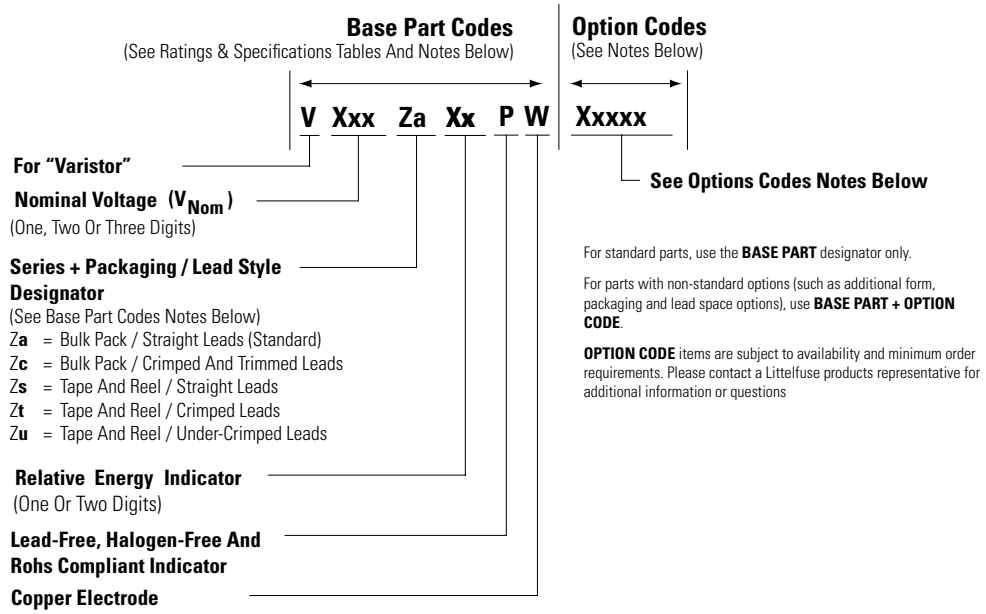

For standard parts, use the **BASE PART** designator only.

For parts with non-standard options (such as additional form, packaging and lead space options), use **BASE PART + OPTION CODE**.

OPTION CODE items are subject to availability and minimum order requirements. Please contact a Littelfuse products representative for additional information or questions

© 2024 Littelfuse, Inc.
Specifications are subject to change without notice.
Revised: GD. 01/09/24

ZA Series
Metal-Oxide Varistors (MOVs)

Ordering Notes:

Base Part Codes:

Series + Packaging / Lead Style Designators:
Ordering examples:

Straight Lead Bulk Pack (standard)	Straight Lead Tape & Reel	Crimped Lead Tape & Reel	Crimped & Trimmed Lead Bulk Pack	Under-Crimp Lead Tape & Reel
V18**ZA**3P	V18**ZS**3P	V18**ZT**3P	V18**ZC**3P	V18**ZU**3P

Crimped lead ZA Series varistors are supplied standard in tape and reel, denoted with "ZT."
"ZC" style is supplied in bulk only.
"ZU" style is supplied in tape and reel only.
For crimped leads without trimming and any varitions other than that described above, please contact Littelfuse.

Packaging and Quantities:

Littelfuse ZA Series varistors are shipped standard in bulk pack with straight leads and lead spacing outlined in the Package Dimensions section of this data sheet. Contact your Littelfuse sales representative to discuss non-standard options.

Tape & Reel Quantities:

Device Size	Voltage	Quantity Per Reel		
		"S" Reel	"T" Reel	"U" Reel
5mm	All	1000	1000	1000
7mm	All	1000	1000	1000
10mm	All	500	500	500
14mm	< 300V	500	500	500
20mm	< 300V	500	500	400

Option Codes:

X10: 10MM LEAD SPACING OPTION --
For 10 -/+1 mm (0.394-/+0.039 in) lead spacing (available on 20mm diameter models only), append standard model BASE PART number with "X10." Example:

Standard Model	Order As
V18ZA40P	V18ZA40P**X10**

X2855: Nickel Barrier COATED WIRE OPTION --
All standard parts use tinned copper clad steel wire. Nickel Barrier Coated wire is available as an option, consisting of Copper wire with a flashing of Nickel followed by a top coating of Tin. To order append standard model BASE PART number with "X2855." Example:

Standard Model	Order As
V18ZA40P	V18ZA40P**X2855**

X1347: Hi-Temperature phenolic coating option --
Phenolic Coated C-III Series devices are available with improved maximum operating maximum temperature of 125°C.

To order, add X1347 to end of part number
(Example: V22ZA3PX1347).

For additional information please refer to the section labeled "Phenolic Coating Option" within this document.

Disclaimer Notice - Information furnished is believed to be accurate and reliable. However, users should independently evaluate the suitability of and test each product selected for their own applications. Littelfuse products are not designed for, and may not be used in, all applications. Read complete Disclaimer Notice at www.littelfuse.com/disclaimer-electronics.

© 2024 Littelfuse, Inc.
Specifications are subject to change without notice.
Revised: GD. 01/09/24