preci-dip

DIL SOCKETS

SERIES 151

151-PP-XXX-00-XXX101
2.54 mm, Solder tail interconnect

DIL interconnect headers with male contacts pluggable into standard female socket contacts

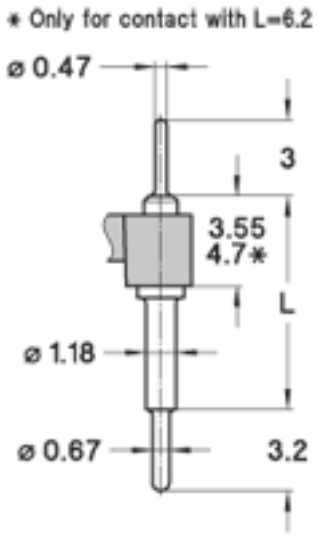

TECHNICAL SPECS.:

Insulator	Black glass filled polyester PCT-GF30-FR
Flammability	UL 94V-O
Contact	Brass CuZn36Pb3 (C36000)
Connecting pin Ø	0.47 mm
Mechanical life	Min. 100 cycles
Rated current	1 A
Dielectric strength	Min. 1000 V RMS

ORDERING INFORMATION:

PP Plating code	Termination	Connecting pin
10	Gold 0.25 µm	Gold 0.25 µm
80	Tin	Tin

For complete part number replace X-...-XXX with the code given below left

PRECI-DIP SA Rue Saint-Henri 11 P.P.Box 834 CH-2800 Delémont / Switzerland
PHONE +41 (0)32 421 04 00 FAX +41 (0)32 421 04 01 E-MAIL sales@precidip.com www.precidip.com

TECHNICAL ASSISTANCE

GENERAL SPECIFICATIONS:

The values listed below are general specs applying for PRECI-DIP DIL sockets. Please see individual catalog page for additional and product specific technical data.

Operating temperature range	-55 ... +125 °C
Climatic category (IEC)	55/125/21
Operating humidity range	annual mean 75 %
Max working voltage	100 VRMS/150 VDC

PRECI-DIP sockets are recognized by Underwriters Laboratories Inc. and listed under "Connectors for Use in Data, Signal, Control and Power Applications", File Nr. E174442.

MECHANICAL CHARACTERISTICS:

Clip retention	Min. 40 N (no displacement under axial force applied)
Contact (sleeve / clip) retention	Min. 3.3 N acc. to MIL-DTL-83734, pt 4.6.4.2

ELECTRICAL CHARACTERISTICS:

Insulation resistance between any two adjacent contacts	Min. 10'000 M at 500 V AC
Capacitance between any two adjacent contacts	Max. 1 pF
Air and creepage distances between any two adjacent contacts	Min. 0.6 mm (Min. 0.2 mm FOR SHRINK-DIP SOCKETS)

ENVIRONMENTAL CHARACTERISTICS:

The sockets withstand the following environmental tests without mechanical and electrical defects:

- Dry heat steady state IEC 60512-11-9.11i / 60068-2-2.Bb: 125 °C, 16h
- Damp heat cyclic IEC 60512-11-12.11m / 60068-2-30.Db: 25/55 °C, 90 – 100 %rH, 1 cycle of 24 h
- Cold steady state IEC 60512-11-10.11j / 60068-2-1.A: -55 °C, 2 h
- Thermal shock IEC 60512-11-4.11d / 60068-2-14.Na: -55/125 °C, 5 cycles 30 min
- Sinusoidal vibrations IEC 60512-6-4.6d / 60068-2-6.Fc: 10 to 500 Hz, 10 g, 1 octave/min, 10 cycles for each axis
- Shock IEC 60512-6-3.6c / 60068-2-27.Ea: 50 g, 11 ms, 3 shocks in three axis

During the above two tests no contact interruption >50 ns does appear.

- Solderability J-STD-002A, Test A, 245°C, 5 s solder alloy SnAg3.8Cu0.7
- Resistance to soldering heat J-STD-0020C, 260°C, 20 s
- Moisture sensitivity J-STD-020C level 1
- Resistance to corrosion :
  1) Salt spray test IEC 60068-2-11.Ka: 48 h
  2) Sulfur dioxide (SO2) test IEC 60068-2-42 Kc: 96 h at 25 ppm SO2, 25 °C, 75 %rH
  3) Hydrogen sulfide (H2S) test IEC 60068-2-43 Kd: 96 h at 12 ppm H2S, 25 °C, 75 %rH

SOLDERLESS COMPLIANT PRESS-FIT CHARACTERISTICS:

PRESS-FIT CHARACTERISTICS MEASURED ACC. TO IEC 60352-5

- Press-in force: 90 N max. (at min. hole dia.) / 65 N typ.
- Push-out force: 30 N min. (at max. hole dia.) / 50 N typ.
- Push-out 3rd cycle: 20 N min. (at max. hole dia.)

PCB HOLE DIMENSIONS

- 2.54 mm grid: Finished hole Ø: 1 + 0.09/-0.06 mm | Drilled hole Ø: 1.15 ± 0.02 mm

PCB HOLE PLATING

- PCB surface finish: Hole plating
- Tin: 5-15 µm tin over min. 25 µm copper
- Copper: min. 25 µm copper
- Gold over nickel: 0.05-0.2 µm gold over 2.5-5 µm nickel over min. 25 µm copper