元器件交易网www.cecb2b.com

DESCRIPTION

The HY57V56820B is a 268,435,456bit CMOS Synchronous DRAM, ideally suited for the main memory applications which require large memory density and high bandwidth. The HY57V56820B is organized as 4banks of 8,388,608x8.

The HY57V56820B is offering fully synchronous operation referenced to a positive edge of the clock. All inputs and outputs are synchronized with the rising edge of the clock input. The data paths are internally pipelined to achieve very high bandwidth. All input and output voltage levels are compatible with LVTTL.

Programmable options include the length of pipeline (Read latency of 2 or 3), the number of consecutive read or write cycles initiated by a single control command (Burst length of 1,2,4,8 or full page), and the burst count sequence(sequential or interleave). A burst of read or write cycles in progress can be terminated by a burst terminate command or can be interrupted and replaced by a new burst read or write command on any cycle. (This pipelined design is not restricted by a `2N` rule.)

FEATURES

- Single 3.3±0.3V power supply
- All device pins are compatible with LVTTL interface
- JEDEC standard 400mil 54pin TSOP-II with 0.8mm of pin pitch
- All inputs and outputs referenced to positive edge of system clock
- Data mask function by DQM
- Internal four banks operation
- Auto refresh and self refresh
- 8192 refresh cycles / 64ms
- Programmable Burst Length and Burst Type
  - 1, 2, 4, 8 or Full page for Sequential Burst
  - 1, 2, 4 or 8 for Interleave Burst
- Programmable $\overline{\text{CAS}}$ Latency ; 2, 3 Clocks

ORDERING INFORMATION

Part No.	Clock Frequency	Power	Organization	Interface	Package
HY57V56820BT-6	166MHz	Normal	4Banks x 8Mbits x8	LVTTL	400mil 54pin TSOP II
HY57V56820BT-K	133MHz				
HY57V56820BT-H	133MHz				
HY57V56820BT-8	125MHz				
HY57V56820BT-P	100MHz				
HY57V56820BT-S	100MHz				
HY57V56820BLT-6	166MHz	Low power			
HY57V56820BLT-K	133MHz				
HY57V56820BLT-H	133MHz				
HY57V56820BLT-8	125MHz				
HY57V56820BLT-P	100MHz				
HY57V56820BLT-S	100MHz				

This document is a general product description and is subject to change without notice. Hyundai Electronics does not assume any responsibility for use of circuits described. No patent licenses are implied.

元器件交易网www.cecb2b.com

PIN CONFIGURATION

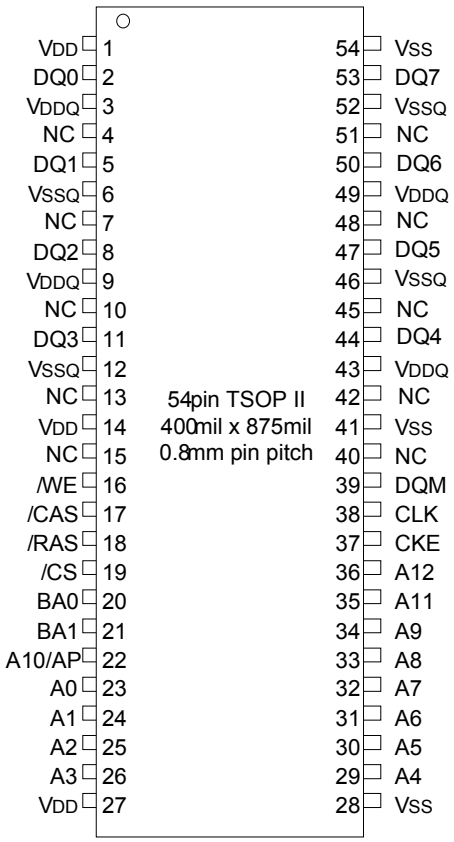

PIN DESCRIPTION

PIN	PIN NAME	DESCRIPTION
CLK	Clock	The system clock input. All other inputs are registered to the SDRAM on the rising edge of CLK
CKE	Clock Enable	Controls internal clock signal and when deactivated, the SDRAM will be one of the states among power down, suspend or self refresh
$\overline{CS}$	Chip Select	Enables or disables all inputs except CLK, CKE and DQM
BA0, BA1	Bank Address	Selects bank to be activated during $\overline{RAS}$ activity Selects bank to be read/written during $\overline{CAS}$ activity
A0 ~ A12	Address	Row Address : RA0 ~ RA12, Column Address : CA0 ~ CA9 Auto-precharge flag : A10
$\overline{RAS}$, $\overline{CAS}$, $\overline{WE}$	Row Address Strobe, Column Address Strobe, Write Enable	$\overline{RAS}$, $\overline{CAS}$ and $\overline{WE}$ define the operation Refer function truth table for details
DQM	Data Input/Output Mask	Controls output buffers in read mode and masks input data in write mode
DQ0 ~ DQ7	Data Input/Output	Multiplexed data input / output pin
VDD/VSS	Power Supply/Ground	Power supply for internal circuits and input buffers
VDDQ/VSSQ	Data Output Power/Ground	Power supply for output buffers
NC	No Connection	No connection

元器件交易网www.cecb2b.com

FUNCTIONAL BLOCK DIAGRAM

8Mbit x 4banks x 8 I/O Synchronous DRAM

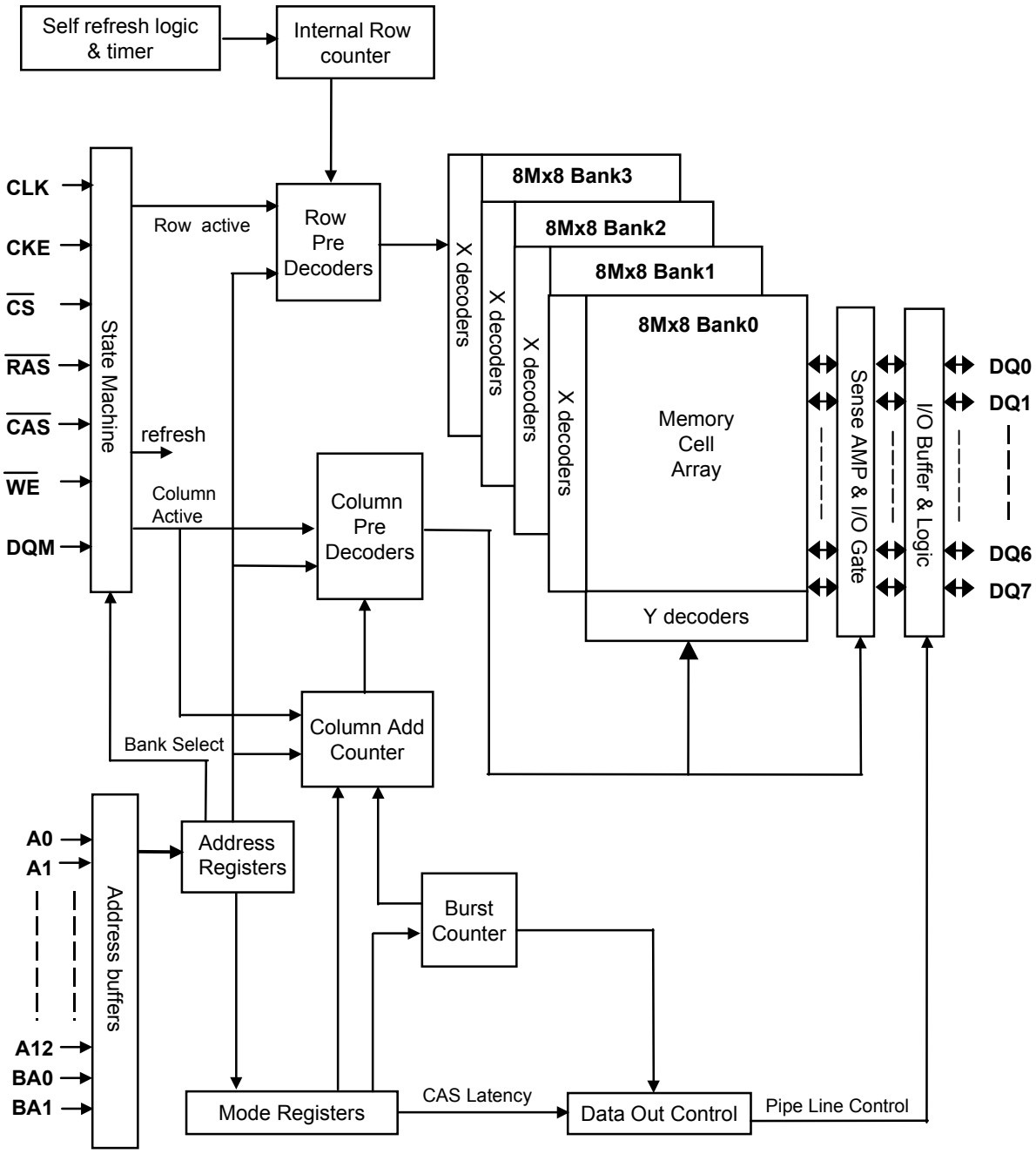

元器件交易网www.cecb2b.com

ABSOLUTE MAXIMUM RATINGS

Parameter	Symbol	Rating	Unit
Ambient Temperature	TA	0 ~ 70	°C
Storage Temperature	TSTG	-55 ~ 125	°C
Voltage on Any Pin relative to VSS	VIN, VOUT	-1.0 ~ 4.6	V
Voltage on VDD relative to VSS	VDD, VDDQ	-1.0 ~ 4.6	V
Short Circuit Output Current	IOS	50	mA
Power Dissipation	PD	1	W
Soldering Temperature · Time	TSOLDER	260 · 10	°C · Sec

Note : Operation at above absolute maximum rating can adversely affect device reliability

DC OPERATING CONDITION (TA=0 to 70°C)

Parameter	Symbol	Min	Typ.	Max	Unit	Note
Power Supply Voltage	VDD, VDDQ	3.0	3.3	3.6	V	1
Input High Voltage	VIH	2.0	3.0	VDD + 0.3	V	1,2
Input Low Voltage	VIL	- 0.3	0	0.8	V	1,3

Note :
1.All voltages are referenced to VSS = 0V
2.VIH (max) is acceptable 5.6V AC pulse width with ≤3ns of duration
3.VIL (min) is acceptable -2.0V AC pulse width with ≤3ns of duration

AC OPERATING CONDITION (TA=0 to 70°C, VDD=3.3 ± 0.3V, VSS=0V)

Parameter	Symbol	Value	Unit	Note
AC Input High / Low Level Voltage	VIH / VIL	2.4/0.4	V	
Input Timing Measurement Reference Level Voltage	Vtrip	1.4	V	
Input Rise / Fall Time	tR / tF	1	ns	
Output Timing Measurement Reference Level	Voutref	1.4	V	
Output Load Capacitance for Access Time Measurement	CL	50	pF	1

Note :
1. Output load to measure access time is equivalent to two TTL gates and one capacitor (50pF)
   For details, refer to AC/DC output circuit

元器件交易网www.cecb2b.com

CAPACITANCE (TA=25°C, f=1MHz)

Parameter	Pin	Symbol	-6/K/H		-8/P/S		Unit
			Min	Max	Min	Max	
Input capacitance	CLK	C_{I1}	2.5	3.5	2.5	4.0	pF
	A0 ~ A12, BA0, BA1, CKE, $\overline{CS}$, $\overline{RAS}$, $\overline{CAS}$, $\overline{WE}$, UDQM, LDQM	C_{I2}	2.5	3.8	2.5	5.0	pF
Data input / output capacitance	DQ0 ~ DQ15	$C_{I/O}$	4.0	6.5	4.0	6.5	pF

OUTPUT LOAD CIRCUIT

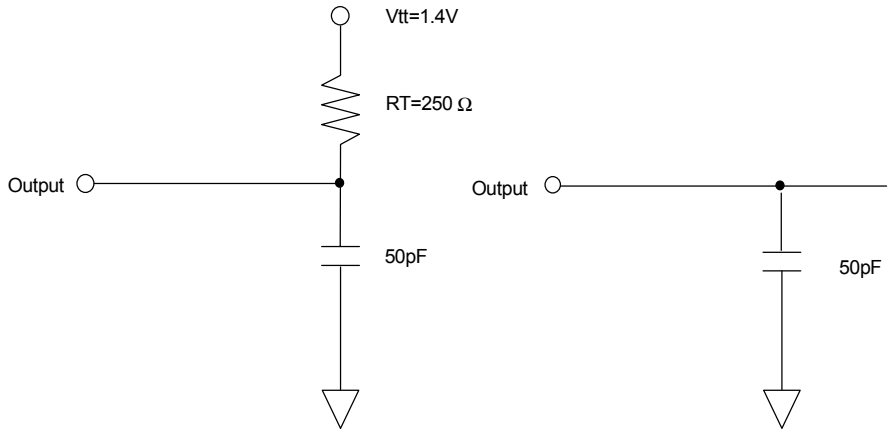

DC Output Load Circuit AC Output Load Circuit

DC CHARACTERISTICS I (TA=0 to 70°C, V_{DD}=3.3±0.3V)

Parameter	Symbol	Min.	Max	Unit	Note
Input Leakage Current	I_{LI}	-1	1	uA	1
Output Leakage Current	I_{LO}	-1	1	uA	2
Output High Voltage	V_{OH}	2.4	-	V	I_{OH} = -4mA
Output Low Voltage	V_{OL}	-	0.4	V	I_{OL} = +4mA

Note :
1.V_{IN} = 0 to 3.6V, All other pins are not tested under V_{IN} =0V
2.DOUT is disabled, V_{OUT}=0 to 3.6V

元器件交易网www.cecb2b.com

DC CHARACTERISTICS II (TA=0 to 70°C, VDD=3.3±0.3V, VSS=0V)

Parameter	Symbol	Test Condition		Speed						Unit	Note
				-6	-K	-H	-8	-P	-S		
Operating Current	IDD1	Burst length=1, One bank active tRC ≥ tRC(min), IOL=0mA		130	120	120	120	110	110	mA	1
Precharge Standby Current in Power Down Mode	IDD2P	CKE ≤ VIL(max), tCK = 15ns		2						mA	
	IDD2PS	CKE ≤ VIL(max), tCK = ∞		1							
Precharge Standby Current in Non Power Down Mode	IDD2N	CKE ≥ VIH(min), $\overline{CS}$ ≥ VIH(min), tCK = 15ns Input signals are changed one time during 30ns. All other pins ≥ VDD-0.2V or ≤ 0.2V		30						mA	
	IDD2NS	CKE ≥ VIH(min), tCK = ∞ Input signals are stable.		15							
Active Standby Current in Power Down Mode	IDD3P	CKE ≤ VIL(max), tCK = 15ns		5						mA	
	IDD3PS	CKE ≤ VIL(max), tCK = ∞		5							
Active Standby Current in Non Power Down Mode	IDD3N	CKE ≥ VIH(min), $\overline{CS}$ ≥ VIH(min), tCK = 15ns Input signals are changed one time during 30ns. All other pins ≥ VDD-0.2V or ≤ 0.2V		40						mA	
	IDD3NS	CKE ≥ VIH(min), tCK = ∞ Input signals are stable.		30							
Burst Mode Operating Current	IDD4	tCK ≥ tCK(min), IOL=0mA All banks active	CL=3	150	130	130	130	110	110	mA	1
			CL=2	140	140	140	140	120	120		
Auto Refresh Current	IDD5	tRRC ≥ tRRC(min), All banks active		240	220	220	200	200	200	mA	2
Self Refresh Current	IDD6	CKE ≤ 0.2V		3						mA	3
				1.5						mA	4

Note :
1.IDD1 and IDD4 depend on output loading and cycle rates. Specified values are measured with the output open
2.Min. of tRRC (Refresh $\overline{RAS}$ cycle time) is shown at AC CHARACTERISTICS II
3.HY57V56820BT-6/H/8/P/S
4.HY57V56820BLT-6/H/8/P/S

元器件交易网www.cecb2b.com

AC CHARACTERISTICS I (AC operating conditions unless otherwise noted)

Parameter		Symbol	-6		-K		-H		-8		-P		-S		Unit	Note
			Min	Max	Min	Max	Min	Max	Min	Max	Min	Max	Min	Max		
System Clock Cycle Time	$\overline{CAS}$ Latency = 3	tCK3	6	1000	7.5	1000	7.5	1000	8	1000	10	1000	10	1000	ns	
	$\overline{CAS}$ Latency = 2	tCK2	10		7.5		10		10		10		12		ns	
Clock High Pulse Width		tCHW	2.5	-	2.5	-	2.5	-	3	-	3	-	3	-	ns	1
Clock Low Pulse Width		tCLW	2.5	-	2.5	-	2.5	-	3	-	3	-	3	-	ns	1
Access Time From Clock	$\overline{CAS}$ Latency = 3	tAC3	-	5.4	-	5.4	-	5.4	-	6	-	6	-	6	ns	2
	$\overline{CAS}$ Latency = 2	tAC2	-	6	-	5.4	-	6	-	6	-	6	-	6	ns	
Data-Out Hold Time		tOH	2.7	-	2.7	-	2.7	-	3	-	3	-	3	-	ns	
Data-Input Setup Time		tDS	1.5	-	1.5	-	1.5	-	2	-	2	-	2	-	ns	1
Data-Input Hold Time		tDH	0.8	-	0.8	-	0.8	-	1	-	1	-	1	-	ns	1
Address Setup Time		tAS	1.5	-	1.5	-	1.5	-	2	-	2	-	2	-	ns	1
Address Hold Time		tAH	0.8	-	0.8	-	0.8	-	1	-	1	-	1	-	ns	1
CKE Setup Time		tCKS	1.5	-	1.5	-	1.5	-	2	-	2	-	2	-	ns	1
CKE Hold Time		tCKH	0.8	-	0.8	-	0.8	-	1	-	1	-	1	-	ns	1
Command Setup Time		tCS	1.5	-	1.5	-	1.5	-	2	-	2	-	2	-	ns	1
Command Hold Time		tCH	0.8	-	0.8	-	0.8	-	1	-	1	-	1	-	ns	1
CLK to Data Output in Low-Z Time		tOLZ	1	-	1	-	1	-	1	-	1	-	1	-	ns	
CLK to Data Output in High-Z Time	$\overline{CAS}$ Latency = 3	tOHZ3	2.7	5.4	2.7	5.4	2.7	5.4	3	6	3	6	3	6	ns	
	$\overline{CAS}$ Latency = 2	tOHZ2	2.7	5.4	2.7	5.4	3	6	3	6	3	6	3	6	ns	

Note :

1.Assume tR / tF (input rise and fall time) is 1ns

2.Access times to be measured with input signals of 1v/ns edge rate

元器件交易网www.cecb2b.com

AC CHARACTERISTICS II

Parameter		Symbol	-6		-K		-H		-8		-P		-S		Unit	Note
			Min	Max	Min	Max	Min	Max	Min	Max	Min	Max	Min	Max		
$\overline{RAS}$ Cycle Time	Operation	tRC	60	-	60	-	65	-	68	-	70	-	70	-	ns	
	Auto Refresh	tRRC	60	-	60	-	65	-	68	-	70	-	70	-	ns	
$\overline{RAS}$ to $\overline{CAS}$ Delay		tRCD	18	-	15	-	20	-	20	-	20	-	20	-	ns	
$\overline{RAS}$ Active Time		tRAS	42	100K	45	100K	45	100K	48	100K	50	100K	50	100K	ns	
$\overline{RAS}$ Precharge Time		tRP	18	-	15	-	20	-	20	-	20	-	20	-	ns	
$\overline{RAS}$ to $\overline{RAS}$ Bank Active Delay		tRRD	12	-	15	-	15	-	16	-	20	-	20	-	ns	
$\overline{CAS}$ to $\overline{CAS}$ Delay		tCCD	1	-	1	-	1	-	1	-	1	-	1	-	CLK	
Write Command to Data-In Delay		tWTL	0	-	0	-	0	-	0	-	0	-	0	-	CLK	
Data-In to Precharge Command		tDPL	2	-	2	-	2	-	2	-	2	-	2	-	CLK	
Data-In to Active Command		tDAL	5	-	5	-	5	-	5	-	5	-	5	-	CLK	
DQM to Data-Out Hi-Z		tDQZ	2	-	2	-	2	-	2	-	2	-	2	-	CLK	
DQM to Data-In Mask		tDQM	0	-	0	-	0	-	0	-	0	-	0	-	CLK	
MRS to New Command		tMRD	2	-	2	-	2	-	2	-	2	-	2	-	CLK	
Precharge to Data Output Hi-Z	$\overline{CAS}$ Latency = 3	tPROZ3	3	-	3	-	3	-	3	-	3	-	3	-	CLK	
	$\overline{CAS}$ Latency = 2	tPROZ2	2	-	2	-	2	-	2	-	2	-	2	-	CLK	
Power Down Exit Time		tPDE	1	-	1	-	1	-	1	-	1	-	1	-	CLK	
Self Refresh Exit Time		tSRE	1	-	1	-	1	-	1	-	1	-	1	-	CLK	1
Refresh Time		tREF	-	64	-	64	-	64	-	64	-	64	-	64	ms	

Note :

1. A new command can be given tRRC after self refresh exit

元器件交易网www.cecb2b.com

IBIS SPECIFICATION

IOH Characteristics (Pull-up)

Voltage	100MHz (Min)	100MHz (Max)	66MHz (Min)
(V)	I(mA)	I(mA)	I(mA)
3.45		-2.4	
3.3		-27.3	
3.0	0	-74.1	-0.7
2.6	-21.1	-129.2	-7.5
2.4	-34.1	-153.3	-13.3
2.0	-58.7	-197	-27.5
1.8	-67.3	-226.2	-35.5
1.65	-73	-248	-41.1
1.5	-77.9	-269.7	-47.9
1.4	-80.8	-284.3	-52.4
1.0	-88.6	-344.5	-72.5
0	-93	-502.4	-93

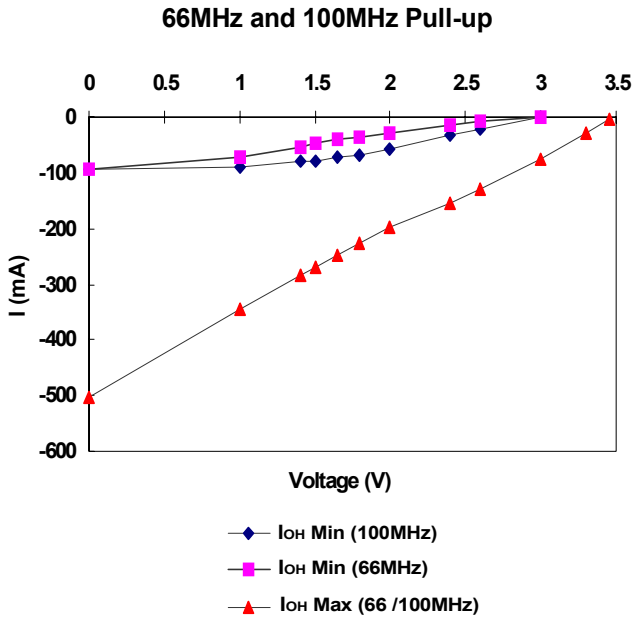

IOL Characteristics (Pull-down)

Voltage	100MHz (Min)	100MHz (Max)	66MHz (Min)
(V)	I(mA)	I(mA)	I(mA)
0	0	0	0
0.4	27.5	70.2	17.7
0.65	41.8	107.5	26.9
0.85	51.6	133.8	33.3
1.0	58.0	151.2	37.6
1.4	70.7	187.7	46.6
1.5	72.9	194.4	48.0
1.65	75.4	202.5	49.5
1.8	77.0	208.6	50.7
1.95	77.6	212.0	51.5
3.0	80.3	219.6	54.2
3.45	81.4	222.6	54.9

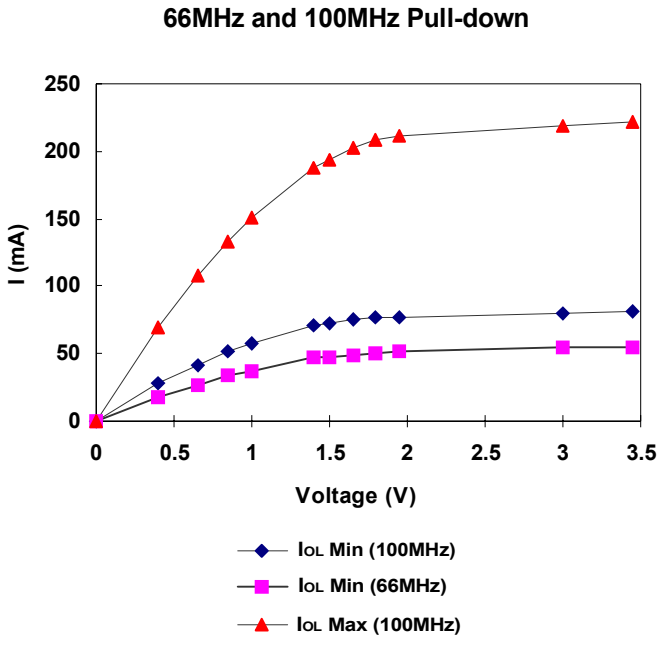

元器件交易网www.cecb2b.com

DEVICE OPERATING OPTION TABLE

HY57V56820B(L)T-6

	CAS Latency	tRCD	tRAS	tRC	tRP	tAC	tOH
166MHz(6ns)	3CLKs	3CLKs	7CLKs	10CLKs	3CLKs	5.4ns	2.7ns
143MHz(7ns)	3CLKs	3CLKs	6CLKs	9CLKs	3CLKs	5.4ns	2.7ns
133MHz(7.5ns)	2CLKs	3CLKs	6CLKs	9CLKs	3CLKs	5.4ns	2.7ns

HY57V56820B(L)T-K

	CAS Latency	tRCD	tRAS	tRC	tRP	tAC	tOH
133MHz(7.5ns)	2CLKs	2CLKs	6CLKs	8CLKs	2CLKs	5.4ns	2.7ns
125MHz(8ns)	3CLKs	3CLKs	6CLKs	9CLKs	3CLKs	6ns	3ns
100MHz(10ns)	2CLKs	2CLKs	6CLKs	9CLKs	3CLKs	6ns	3ns

HY57V56820B(L)T-H

	CAS Latency	tRCD	tRAS	tRC	tRP	tAC	tOH
133MHz(7.5ns)	3CLKs	3CLKs	7CLKs	10CLKs	3CLKs	5.4ns	2.7ns
125MHz(8ns)	3CLKs	3CLKs	6CLKs	9CLKs	3CLKs	6ns	3ns
100MHz(10ns)	2CLKs	2CLKs	5CLKs	7CLKs	2CLKs	6ns	3ns

HY57V56820B(L)T-8

	CAS Latency	tRCD	tRAS	tRC	tRP	tAC	tOH
125MHz(8ns)	3CLKs	3CLKs	6CLKs	9CLKs	3CLKs	6ns	3ns
100MHz(10ns)	2CLKs	2CLKs	5CLKs	7CLKs	2CLKs	6ns	3ns
83MHz(12ns)	2CLKs	2CLKs	4CLKs	6CLKs	2CLKs	6ns	3ns

HY57V56820B(L)T-P

	CAS Latency	tRCD	tRAS	tRC	tRP	tAC	tOH
100MHz(10ns)	2CLKs	2CLKs	5CLKs	7CLKs	2CLKs	6ns	3ns
83MHz(12ns)	2CLKs	2CLKs	5CLKs	7CLKs	2CLKs	6ns	3ns
66MHz(15ns)	2CLKs	2CLKs	4CLKs	6CLKs	2CLKs	6ns	3ns

HY57V56820B(L)T-S

	CAS Latency	tRCD	tRAS	tRC	tRP	tAC	tOH
100MHz(10ns)	3CLKs	2CLKs	5CLKs	7CLKs	2CLKs	6ns	3ns
83MHz(12ns)	2CLKs	2CLKs	5CLKs	7CLKs	2CLKs	6ns	3ns
66MHz(15ns)	2CLKs	2CLKs	4CLKs	6CLKs	2CLKs	6ns	3ns

元器件交易网www.cecb2b.com

COMMAND TRUTH TABLE

Command		CKEn-1	CKEn	$\overline{CS}$	$\overline{RAS}$	$\overline{CAS}$	$\overline{WE}$	DQM	ADDR	A10/AP	BA	Note
Mode Register Set		H	X	L	L	L	L	X	OP code			
No Operation		H	X	H	X	X	X	X	X			
				L	H	H	H					
Bank Active		H	X	L	L	H	H	X	RA		V	
Read		H	X	L	H	L	H	X	CA	L	V	
Read with Autoprecharge										H		
Write		H	X	L	H	L	L	X	CA	L	V	
Write with Autoprecharge										H		
Precharge All Banks		H	X	L	L	H	L	X	X	H	X	
Precharge selected Bank										L	V	
Burst Stop		H	X	L	H	H	L	X	X			
DQM		H	X					V	X			
Auto Refresh		H	H	L	L	L	H	X	X			
Burst-Read-Single-WRITE		H	X	L	L	L	H	X	A9 Pin High (Other Pins OP code)			
Self Refresh[1]	Entry	H	L	L	L	L	H	X	X			
	Exit	L	H	H	X	X	X	X				
				L	H	H	H					
Precharge power down	Entry	H	L	H	X	X	X	X	X			
				L	H	H	H					
	Exit	L	H	H	X	X	X	X				
				L	H	H	H					
Clock Suspend	Entry	H	L	H	X	X	X	X	X			
				L	V	V	V					
	Exit	L	H	X				X				

Note :

1. Exiting Self Refresh occurs by asynchronously bringing CKE from low to high
2. X = Don't care, H = Logic High, L = Logic Low. BA =Bank Address, RA = Row Address, CA = Column Address, Opcode = Operand Code, NOP = No Operation

元器件交易网www.cecb2b.com

PACKAGE INFORMATION

400mil 54pin Thin Small Outline Package

