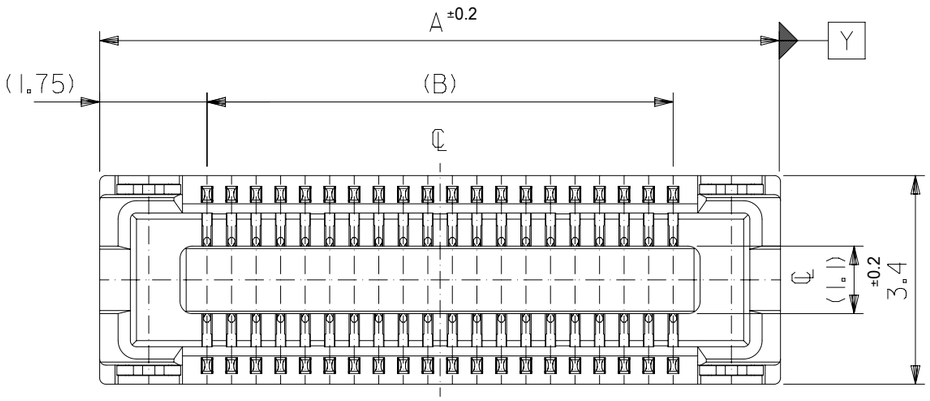

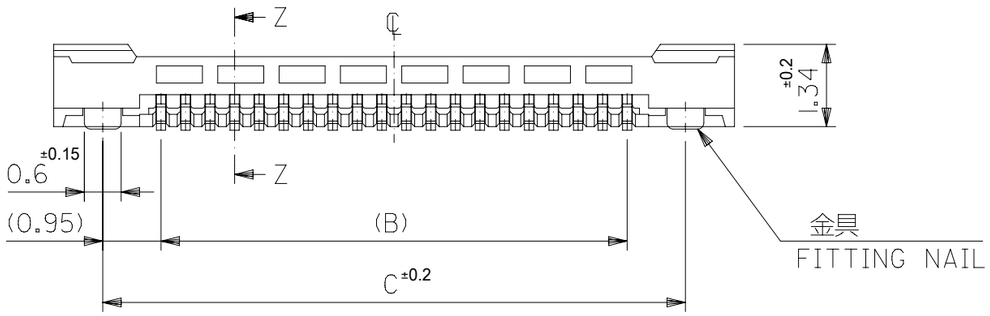

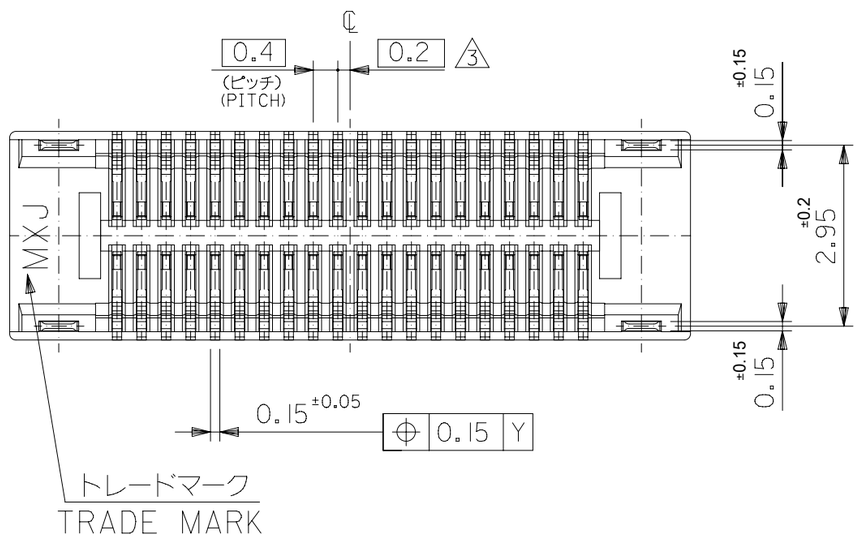

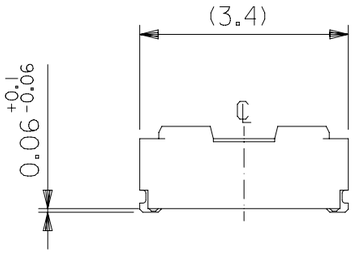

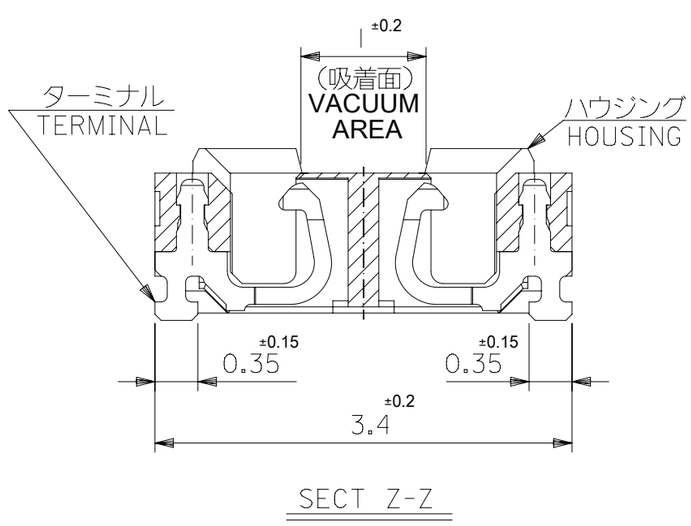

SECT Z-Z

注記 NOTES:

1. 使用材料 MATERIAL
   ハウジング：液晶ポリマー（ＬＣＰ）
   ガラス充填 ＵＬ９４Ｖ－０（黒）
   HOUSING: LIQUID CRYSTAL POLYMER(GLASS FILLED) UL94V-0 (COLOR:BLACK)
   ターミナル：リン青銅（ｔ＝０．１５）
   TERMINAL: PHOSPHOR BRONZE (t=0.15)
   金具：リン青銅（ｔ＝０．１５）
   FITTING NAIL: PHOSPHOR BRONZE (t=0.15)
2. メッキ仕様 PLATING
   ターミナル TERMINAL
   金メッキ ０．２マイクロメートル以上（コンタクト部）
   GOLD 0.2MICROMETER MINIMUM (CONTACT AREA)
   金メッキ ０．４マイクロメートル以下（テール部）
   GOLD 0.4MICROMETER MAXIMUM (TAIL AREA)
   下地メッキ：ニッケルメッキ １．５マイクロメートル以上
   UNDER PLATING : NICKEL 1.5MICROMETER MINIMUM
   ＊コンタクト部とテール部はニッケルメッキによって分断されている金メッキです。
   DIVIDE INTO PARTS THE GOLD PLATING OF THE CONTACT AND THE TAIL PART BY THE NICKEL PLATING.
   金具 FITTING NAIL
   錫メッキ １．０ マイクロメートル以上
   TIN PLATING 1.0 MICROMETER MINIMUM
   下地メッキ：ニッケルメッキ １．０ マイクロメートル以上
   UNDER PLATING : NICKEL 1.0 MICROMETER MINIMUM
3. （全極数／２）＝偶数の場合に適用。
   APPLY FOR (CIRCUIT/2)=EVEN.
4. 嵌合相手：**55909シリーズ (嵌合高さ = 1.5mm) 及び 501745シリーズ (嵌合高さ = 2.0mm)**
   MATE WITH : **55909 SERIES (HEIGTH = 1.5mm) AND 501745 SERIES (HEIGHT = 2.0mm)**
5. テール平坦度は、０．０８以下
   テール及び金具の平坦度は、０．１以下
   TAIL COPLANARITY TO BE 0.08MAXIMUM
   TAIL AND FITTING NAIL COPLANARITY TO BE 0.1MAXIMUM
6. 同一回路以外のパターン書込み禁止範囲を示す。
   NO PRINT CIRCUIT AREA OTHER THAN THE SAME CIRCUIT.
7. 本製品は 51338-***3 の鉛フリー品である。
   THIS PRODUCT IS LEAD FREE OF 51338-***3.

C	B	A	EMBOSSED PACKAGE / ORDER NO. オーダー番号	CKT.
21.5	19.6	23.1	51338-1074	100
19.5	17.6	21.1	51338-0974	90
17.5	15.6	19.1	51338-0874	80
15.5	13.6	17.1	51338-0774	70
14.3	12.4	15.9	51338-6473	64
13.5	11.6	15.1	51338-0674	60
12.3	10.4	13.9	51338-5473	54
11.5	9.6	13.1	51338-0574	50
10.3	8.4	11.9	51338-4473	44
9.5	7.6	11.1	51338-0474	40
8.3	6.4	9.9	51338-3474	34
7.5	5.6	9.1	51338-0374	30
6.7	4.8	8.3	51338-2674	26
6.3	4.4	7.9	51338-2474	24
5.9	4.0	7.5	51338-2274	22
5.5	3.6	7.1	51338-0274	20
4.7	2.8	6.3	51338-1674	16
3.9	2.0	5.5	51338-9974	12
3.5	1.6	5.1	51338-9873	10

CONNECTOR SERIES No. 51338-***9

THIS DRAWING CONTAINS INFORMATION THAT IS PROPRIETARY TO MOLEX ELECTRONIC TECHNOLOGIES, LLC AND SHOULD NOT BE USED WITHOUT WRITTEN PERMISSION

DIMENSION UNITS	SCALE
mm	NTS

GENERAL TOLERANCES (UNLESS SPECIFIED)

ANGULAR TOL	± °
4 PLACES	±
3 PLACES	±
2 PLACES	±
1 PLACE	±
0 PLACES	±

DRAFT WHERE APPLICABLE MUST REMAIN WITHIN DIMENSIONS

CURRENT REV DESC:

EC NO: 739909
DRWN: RAJMOK 2023/02/21
CHK'D: HSHIMOYAMA 2023/02/23
APPR: YNAITO 2023/02/23

INITIAL REVISION:
DRWN: MNINOMIYA 2004/03/31
APPR: MSASAO 2004/04/02

molex

0.4 B-TO-B CONN. H = 1.5 / 2.0
J-BEND REC.

PRODUCT CUSTOMER DRAWING

DOCUMENT NUMBER	DOC TYPE	DOC PART	REVISION
SD-51338-003	PSD	001	K

THIRD ANGLE PROJECTION	DRAWING	SERIES	MATERIAL NUMBER	CUSTOMER	SHEET NUMBER
	A3-SIZE	51338	SEE TABLE	GENERAL MARKET	1 OF 2

DOCUMENT STATUS	P1	RELEASE DATE	2023/02/23 16:23:55

FORMAT: master-lb-prod-A3
REVISION: J1
DATE: 2021/05/01

MATE : 51338 WITH 55909

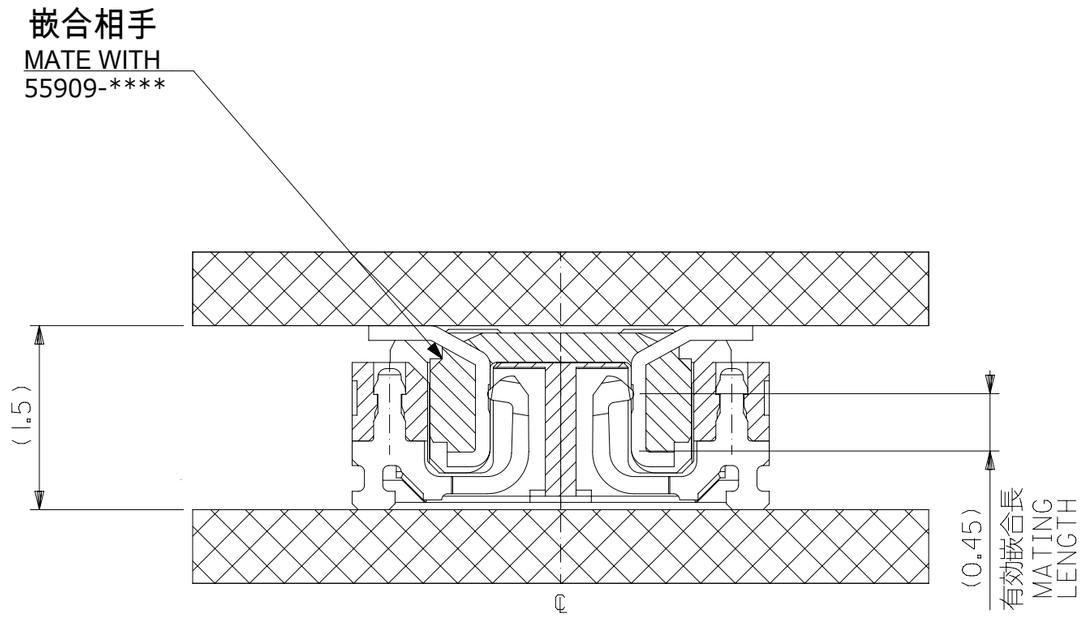

嵌合断面図（参考）
MATED DRAWING (REFERENCE)

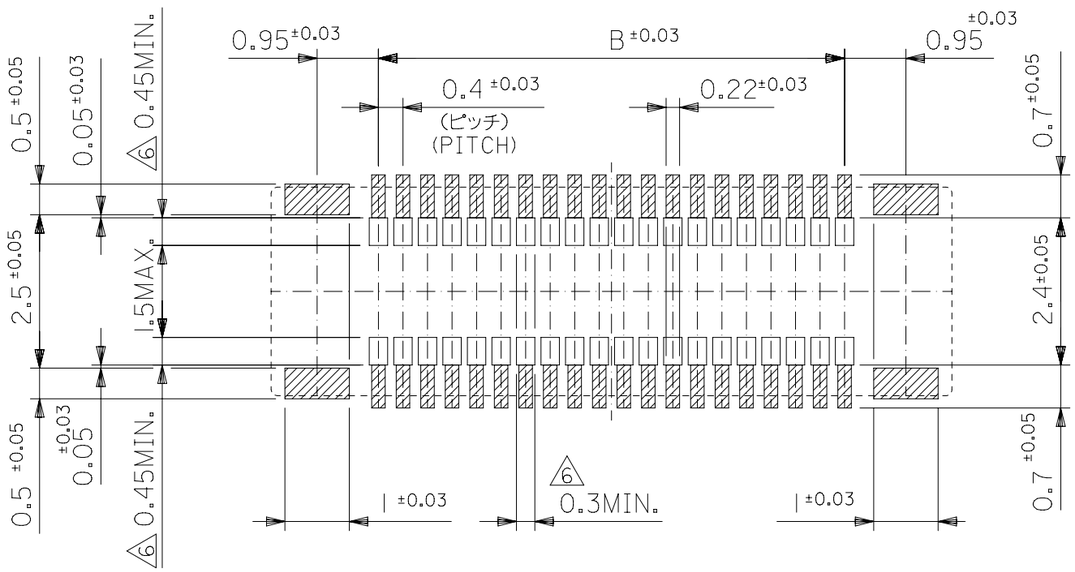

参考基板レイアウト（マウント面）
P.C.BOARD PATTERN DIMENSION.(REFERENCE)
(MOUNTING AREA)

MATE : 51338 WITH 501745

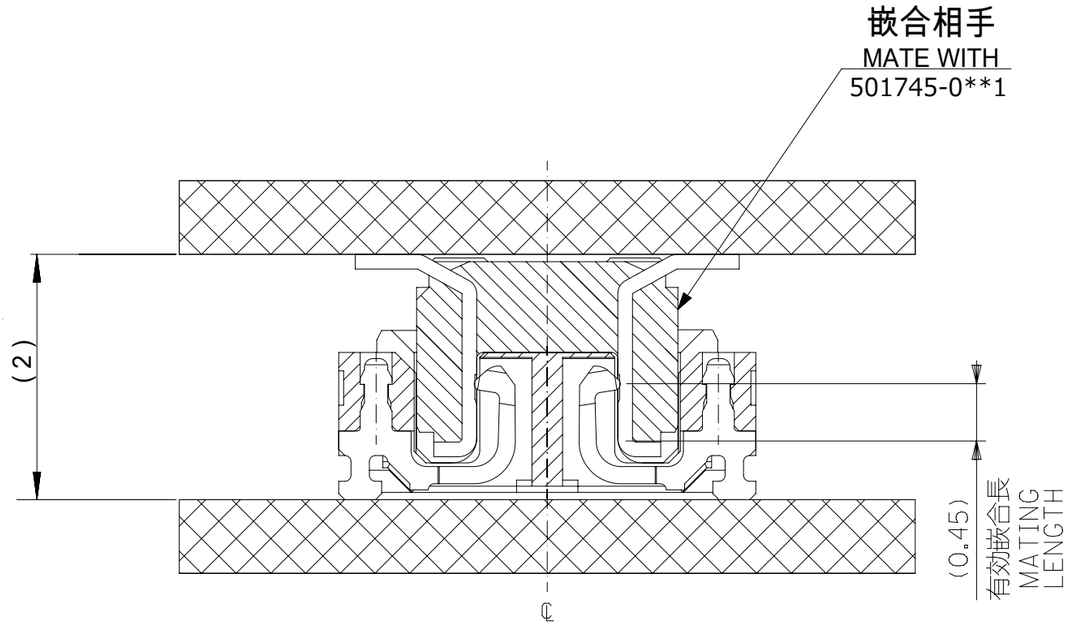

嵌合断面図（参考）
MATED DRAWING (REFERENCE)

THIS DRAWING CONTAINS INFORMATION THAT IS PROPRIETARY TO MOLEX ELECTRONIC TECHNOLOGIES, LLC AND SHOULD NOT BE USED WITHOUT WRITTEN PERMISSION

DIMENSION UNITS	SCALE
mm	NTS

GENERAL TOLERANCES (UNLESS SPECIFIED)

ANGULAR TOL	± °
4 PLACES	±
3 PLACES	±
2 PLACES	±
1 PLACE	±
0 PLACES	±

DRAFT WHERE APPLICABLE MUST REMAIN WITHIN DIMENSIONS

CURRENT REV DESC:

EC NO: 739909
DRWN: RAJMOK 2023/02/21
CHK'D: HSHIMOYAMA 2023/02/23
APPR: YNAITO 2023/02/23

INITIAL REVISION:
DRWN: MNINOMIYA 2004/03/31
APPR: MSASAO 2004/04/02

molex

0.4 B-TO-B CONN. H = 1.5 / 2.0
J-BEND REC.

PRODUCT CUSTOMER DRAWING

THIRD ANGLE PROJECTION	DRAWING	SERIES	MATERIAL NUMBER	CUSTOMER	SHEET NUMBER
	A3-SIZE	51338	SEE SHEET-1	GENERAL MARKET	2 OF 2

DOCUMENT NUMBER	DOC TYPE	DOC PART	REVISION
SD-51338-003	PSD	001	K

DOCUMENT STATUS	P1	RELEASE DATE	2023/02/23 16:23:55

FORMAT: master-tb-prod-A3
REVISION: J1
DATE: 2021/05/01

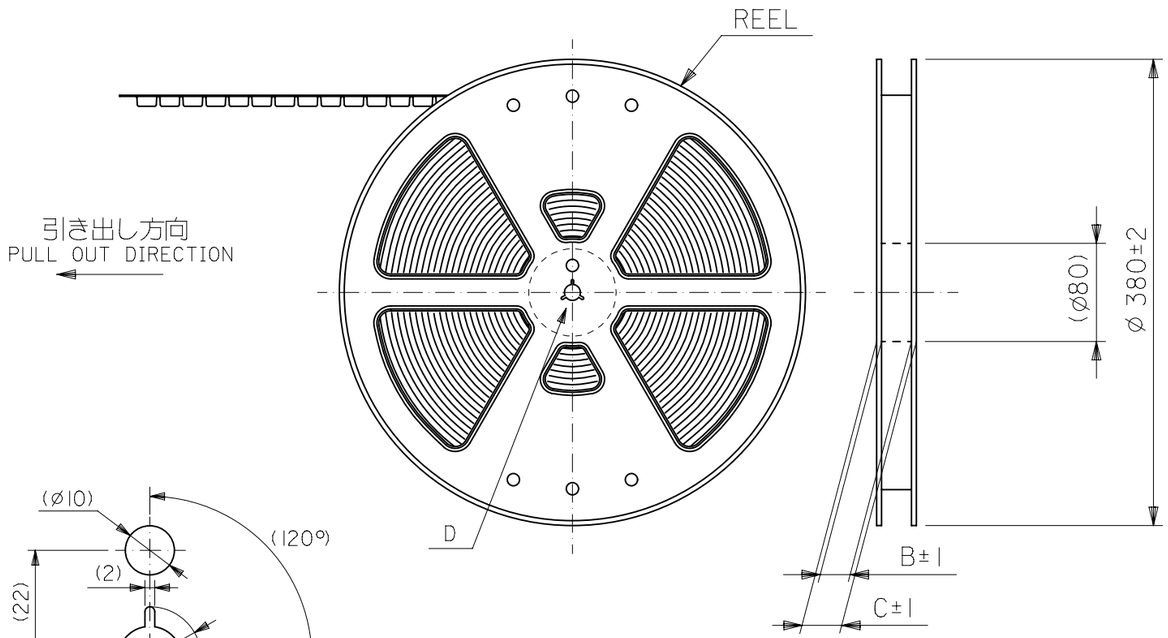

DETAIL D

NOTES

1. 製品詳細寸法については製品単体図面を参照下さい。
   DETAIL DIMENSIONS, SEE PRODUCT DRAWING.
2. 梱包数量：２５００個／リール
   NUMBER OF CONNECTORS ：2500PCS/REEL
3. リードテープ長さ LEAD TAPE LENGTH

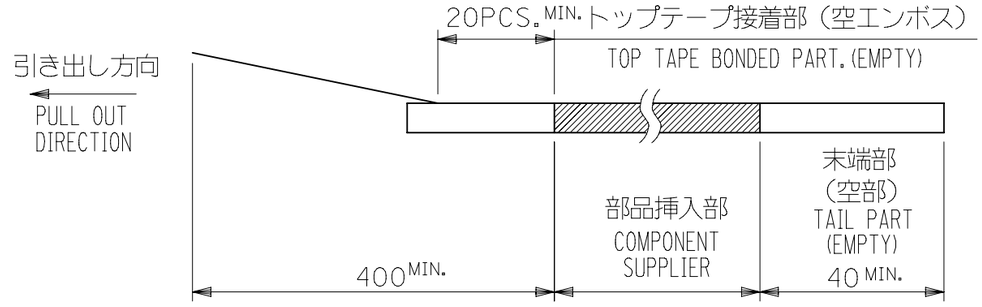

4. トップテープの剥離強度： 0.1N～1.3N{10gf～130gf}
   （剥離方向は下図参照）
   尚、本規格値は出荷時に適用。（但し、輸送時に剥離が発生しないこと。）
   PEELING OFF FORCE OF TOP TAPE ：0.1N～1.3N{10gf～130gf}
   (PEELING DIRECTION AS SHOWN IN FOLLOWING FIG.)
   THIS REQUIREMENT SHOULD BE APPLIED AT SHIPMENT.
   PEEL OFF SHOULD NOT BE ALLOWED , DURING TRANSPORTATION.

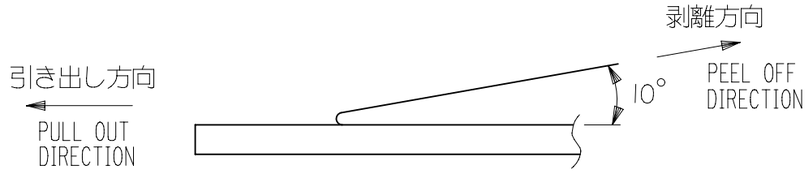

5. 材料
   キャリアテープ（CARRIER TAPE）：ポリスチレン（ＰＳ）
   トップテープ（TOPTAPE）： PET
   リール（REEL）： ポリスチレン（ＰＳ） <リサイクル材を含む>
   POLYSTYRENE (PS) <RECYCLE MATERIAL CONTAINED>

6. 本製品は 51338-***4 の鉛フリー品である。
   THIS PRODUCT IS LEAD FREE OF 51338-***4.

7. ELV 及び RoHS 適合品。
   ELV AND RoHS COMPLIANT.

THIS DRAWING CONTAINS INFORMATION THAT IS PROPRIETARY TO MOLEX ELECTRONIC TECHNOLOGIES, LLC AND SHOULD NOT BE USED WITHOUT WRITTEN PERMISSION

DIMENSION UNITS	mm
SCALE	NTS
GENERAL TOLERANCES (UNLESS SPECIFIED)	
ANGULAR TOL ±	°
4 PLACES ±	
3 PLACES ±	
2 PLACES ±	
1 PLACE ±	
0 PLACES ±	
DRAFT WHERE APPLICABLE MUST REMAIN WITHIN DIMENSIONS	

CURRENT REV DESC:

EC NO: 638555
DRWN: BKBAE 2020/05/15
CHK'D: SHCHU 2020/05/29
APPR: SHCHU 2020/06/01

INITIAL REVISION:
DRWN: MNINOMIYA 2004/03/31
APPR: MSASAO 2004/04/02

THIRD ANGLE PROJECTION | DRAWING: A3-SIZE | SERIES: 51338

molex

0.4 B-TO-B CONN. H = 1.5 / 2.0
J-BEND REC.

PRODUCT CUSTOMER DRAWING

DOCUMENT NUMBER	DOC TYPE	DOC PART	REVISION
SD-51338-004	PSD	001	H

MATERIAL NUMBER	CUSTOMER	SHEET NUMBER
SEE CHART	GENERAL MARKET	1 OF 4

DOCUMENT STATUS	P1	RELEASE DATE	2020/06/01 01:17:14

FORMAT: master-lb-prod-A3
REVISION: J
DATE: 2020/01/14

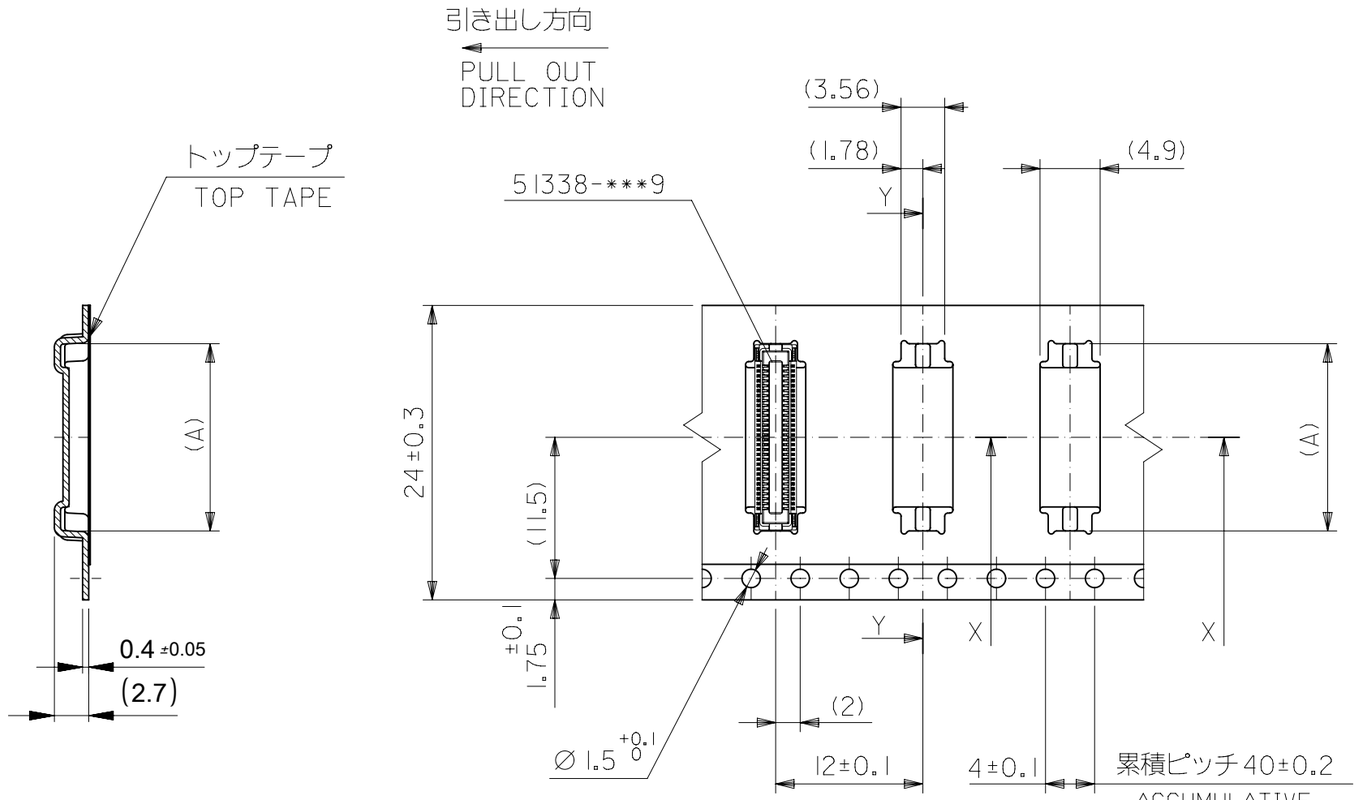

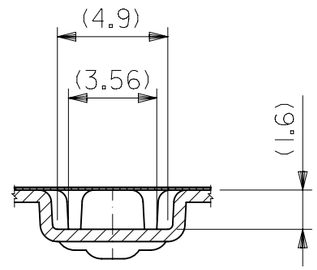

24mm幅キャリアテープ

24mm WIDTH CARRIER TAPE

キャリアテープ幅 CARRIER TAPE WIDTH	C	B	(A)	EMBOSSED PACKAGE ORDER NO. オーダー番号	CKT.
24	29.4	25.4	16.06	51338-6473	64
			15.26	51338-0674	60
			14.06	51338-5473	54
			13.26	51338-0574	50
			12.06	51338-4473	44
			11.26	51338-0474	40
			10.06	51338-3474	34
			9.26	51338-0374	30
			8.46	51338-2674	26
			8.06	51338-2474	24
			7.66	51338-2274	22
			7.26	51338-0274	20
			6.46	51338-1674	16
			5.66	51338-9974	12
			5.26	51338-9873	10

CONNECTOR SERIES No. 51338-***9

THIS DRAWING CONTAINS INFORMATION THAT IS PROPRIETARY TO MOLEX ELECTRONIC TECHNOLOGIES, LLC AND SHOULD NOT BE USED WITHOUT WRITTEN PERMISSION

DIMENSION UNITS	SCALE
mm	NTS

GENERAL TOLERANCES (UNLESS SPECIFIED)

ANGULAR TOL ±	°
4 PLACES	±
3 PLACES	±
2 PLACES	±
1 PLACE	±
0 PLACES	±

DRAFT WHERE APPLICABLE MUST REMAIN WITHIN DIMENSIONS

CURRENT REV DESC:

EC NO: 638555
DRWN: BKBAE 2020/05/15
CHK'D: SHCHU 2020/05/29
APPR: SHCHU 2020/06/01

INITIAL REVISION:
DRWN: MNINOMIYA 2004/03/31
APPR: MSASAO 2004/04/02

molex

0.4 B-TO-B CONN. H = 1.5 / 2.0
J-BEND REC.

PRODUCT CUSTOMER DRAWING

DOCUMENT NUMBER	DOC TYPE	DOC PART	REVISION
SD-51338-004	PSD	001	H

THIRD ANGLE PROJECTION	DRAWING	SERIES	MATERIAL NUMBER	CUSTOMER	SHEET NUMBER
	A3-SIZE	51338	SEE CHART	GENERAL MARKET	2 OF 4

DOCUMENT STATUS	P1	RELEASE DATE	2020/06/01 01:17:14

FORMAT: master-tb-prod-A3
REVISION: J
DATE: 2020/01/14

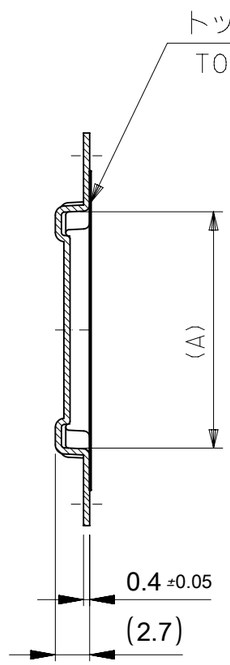

SECT:Y-Y

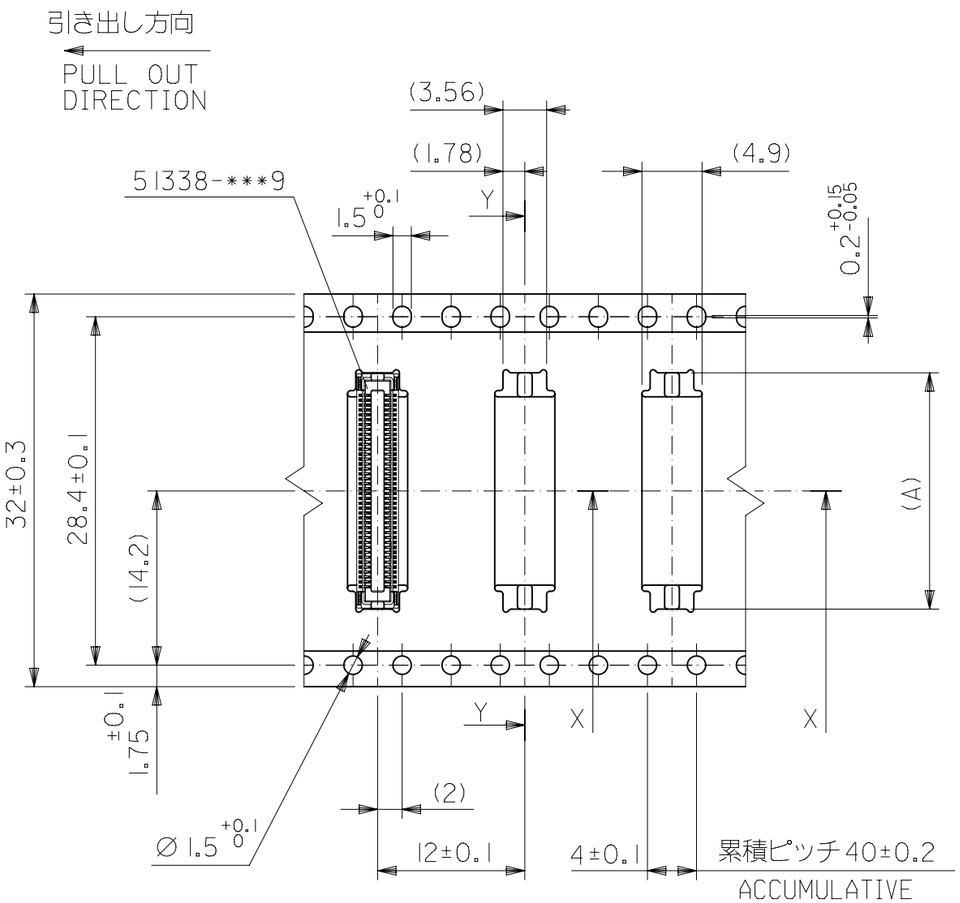

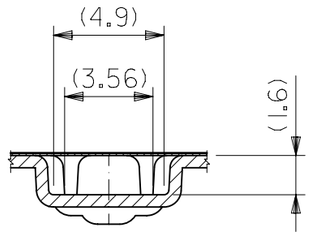

SECT:X-X

32mm幅キャリアテープ

32mm WIDTH CARRIER TAPE

32	37.4	33.4	21.26	51338-0974	90
			19.26	51338-0874	80
			17.26	51338-0774	70
キャリアテープ幅 CARRIER TAPE WIDTH	C	B	(A)	EMBOSSED PACKAGE ORDER NO. オーダー番号	CKT。

CONNECTOR SERIES No. 51338-***9

THIS DRAWING CONTAINS INFORMATION THAT IS PROPRIETARY TO MOLEX ELECTRONIC TECHNOLOGIES, LLC AND SHOULD NOT BE USED WITHOUT WRITTEN PERMISSION

DIMENSION UNITS: mm | SCALE: NTS

GENERAL TOLERANCES (UNLESS SPECIFIED)

ANGULAR TOL	± °
4 PLACES	±
3 PLACES	±
2 PLACES	±
1 PLACE	±
0 PLACES	±

DRAFT WHERE APPLICABLE MUST REMAIN WITHIN DIMENSIONS

CURRENT REV DESC:

EC NO: 638555
DRWN: BKBAE 2020/05/15
CHK'D: SHCHU 2020/05/29
APPR: SHCHU 2020/06/01

INITIAL REVISION:
DRWN: MNINOMIYA 2004/03/31
APPR: MSASAO 2004/04/02

molex

0.4 B-TO-B CONN. H = 1.5 / 2.0
J-BEND REC.

PRODUCT CUSTOMER DRAWING

DOCUMENT NUMBER	DOC TYPE	DOC PART	REVISION
SD-51338-004	PSD	001	H

THIRD ANGLE PROJECTION	DRAWING	SERIES	MATERIAL NUMBER	CUSTOMER	SHEET NUMBER
	A3-SIZE	51338	SEE CHART	GENERAL MARKET	3 OF 4

DOCUMENT STATUS	P1	RELEASE DATE	2020/06/01 01:17:14

FORMAT: master-lb-prod-A3
REVISION: J
DATE: 2020/01/14

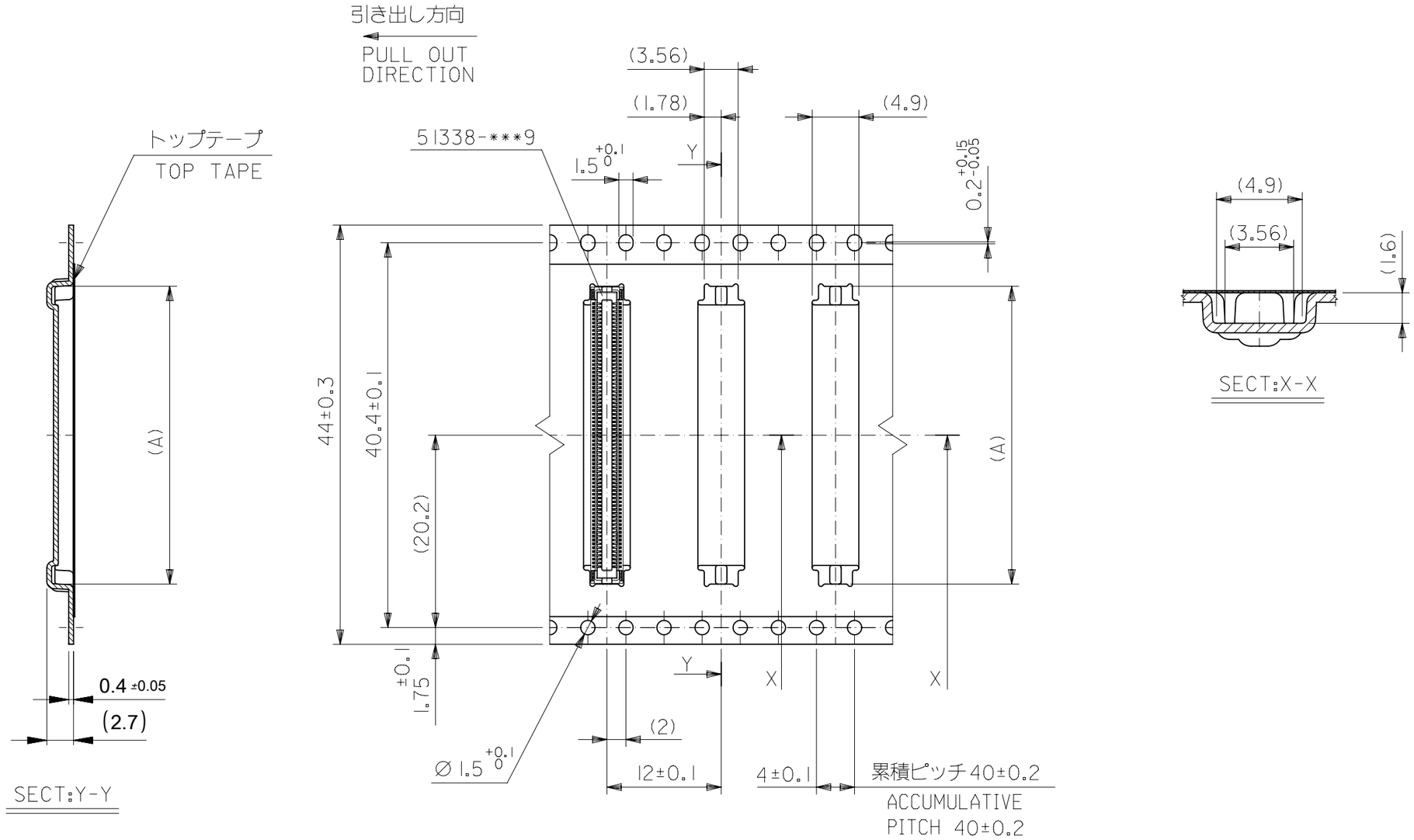

44mm幅キャリアテープ

44mm WIDTH CARRIER TAPE

44	49.4	45.4	23.26	51338-1074	100
キャリアテープ幅 CARRIER TAPE WIDTH	C	B	(A)	EMBOSSED PACKAGE ORDER NO. オーダー番号	CKT.

CONNECTOR SERIES No. 51338-***9

THIS DRAWING CONTAINS INFORMATION THAT IS PROPRIETARY TO MOLEX ELECTRONIC TECHNOLOGIES, LLC AND SHOULD NOT BE USED WITHOUT WRITTEN PERMISSION

DIMENSION UNITS: mm
SCALE: NTS
GENERAL TOLERANCES (UNLESS SPECIFIED)
ANGULAR TOL ± °
4 PLACES ±
3 PLACES ±
2 PLACES ±
1 PLACE ±
0 PLACES ±
DRAFT WHERE APPLICABLE MUST REMAIN WITHIN DIMENSIONS

CURRENT REV DESC:

EC NO: 638555
DRWN: BKBAE 2020/05/15
CHK'D: SHCHU 2020/05/29
APPR: SHCHU 2020/06/01

INITIAL REVISION:
DRWN: MNINOMIYA 2004/03/31
APPR: MSASAO 2004/04/02

THIRD ANGLE PROJECTION | DRAWING: A3-SIZE | SERIES: 51338

molex

0.4 B-TO-B CONN. H = 1.5 / 2.0
J-BEND REC.

PRODUCT CUSTOMER DRAWING

DOCUMENT NUMBER	DOC TYPE	DOC PART	REVISION
SD-51338-004	PSD	001	H

MATERIAL NUMBER	CUSTOMER	SHEET NUMBER
SEE CHART	GENERAL MARKET	4 OF 4

DOCUMENT STATUS	P1	RELEASE DATE	2020/06/01 01:17:14

FORMAT: master-lb-prod-A3
REVISION: J
DATE: 2020/01/14