广州市东裕光电科技有限公司

产品规格书
SPECIFICATION

客户名称 CUSTOMER	
产品名称 PRODUCTION	红外线接收头　Infrared Receiver Module
产品型号 MODEL	DYWH-IRM-3638JF
版本号 VERSION NO	A1.0

厂址(Add)：广东省广州市番禺区石基镇海涌路 3 号 10 号厂房 2 楼

电话(Tel)：18038161512

传真(Fax)：020-39966833

网址(Net)：www.tonyuled.cn　www.tonyuled.com

客户确认 CUSTOMER CONFIRMATION	审　核 CHECKED BY	编　制 PREPARED BY
	邓晓军	区家俊

Copyright © 2023, TONYU All Rights Reserved.

DYWH-IRM-3638JF

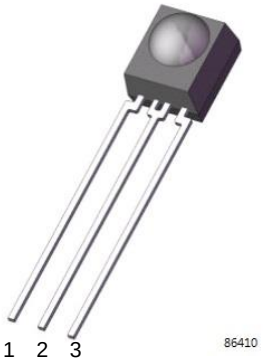

Pin Configuration

1. Out
2. Gnd
3. V_{CC}

Fig.1 Block Diagram

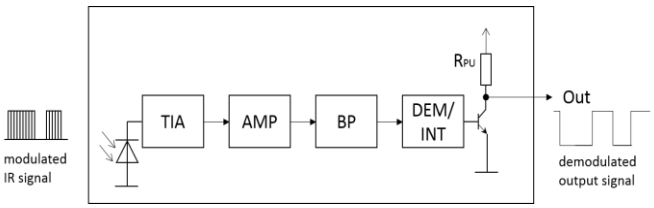

Features

- Circular lens for improved reception characteristics
- Available for various carrier frequencies
- Low operating voltage and low power consumption
- High immunity against lamp and TFT backlight noise
- Pb free and RoHS compliant
- Compliance with EU REACH
- Compliance Halogen Free (Br < 900ppm, Cl < 900ppm, Br+Cl < 1500ppm)

Description

DYWH-IRM-36xxJF devices are DIP type infrared receivers which have been developed and designed by using the latest IC technology, providing compatibility to most common IR protocols.
The PIN diode and preamplifier are assembled onto a lead frame and molded into a black epoxy package which operates as an IR filter. The demodulated output signal can directly be decoded by a microprocessor.

Applications

- AV equipment such as TV, VCR, DVD, CD, MD, etc.
- CATV set top boxes
- Multi-media Equipment
- Other devices using IR remote control

Copyright © 2023, TONYU All Rights Reserved.

Part number table

Model No.	Carrier Frequency f_c
DYWH-IRM-3636JF	36 kHz
DYWH-IRM-3638JF	38 kHz
DYWH-IRM-3640JF	40 kHz

Absolute Maximum Ratings (T_a=25°C) (note1)

Parameter	Symbol	Rating	Unit
Supply Voltage	V_{cc}	0 ~ 6	V
Output current	I_{OUT}	0~2.5	mA
Operating Temperature	T_{opr}	-20 ~ +80	℃
Storage Temperature	T_{stg}	-40 ~ +85	℃
Soldering Temperature (note2)	T_{sol}	260	℃

Electro-Optical Characteristics (T_a=25°C, V_{cc}=5V)

Parameter	Symbol	Min.	Typ.	Max.	Unit	Condition
Current consumption	I_{cc}	---	0.48	0.8	mA	No input signal
Supply voltage	V_{CC}	4.5	-	5.5	V	
Peak wavelength	λ_p	---	940	---	nm	
High level output voltage	V_{OH}	Vcc-0.3	---	---	V	Output open
Low level output voltage	V_{OL}	---	0.2	0.5	V	$I_{OUT} \leqq 2mA$
Internal pull up resistor	R_{PU}	---	50	---	kΩ	
Max Reception range	L_{0max}	---	15	---	m	Test signal according to figure 2 Output pulse width: 400us<T_L<800us 400us<T_H<800us
	L_{45max}	---	7	---		
Min reception distance	L_{0min}	---	---	0.1		
Half angle(horizontal)	φ_h	---	±45	---	deg	
Half angle(vertical)	φ_v	---	±45	---	deg	
Output low pulse	T_L	400	---	800	us	See chapter test method, L_0 = 0.1m ~ 15m
Output high pulse	T_H	400	---	800	us	

Note1: Absolute Maximum Ratings indicate limits beyond which damage to the device may occur.
Note2: 4mm from mold body for less than 5 seconds

Copyright © 2023, TONYU All Rights Reserved.

Test method

The specified electro-optical characteristics are valid under the following conditions.

1. Measurement environment must be a place without extreme reflections
2. Transmitter radiant intensity I_e = 350mW/sr
3. External lighting contains LED lighting with a color temperature of 6000K and illumination at the IR receiver is less than 100lux (Ev≦ 100Lux))
4. Test signal as shown below in figure 3

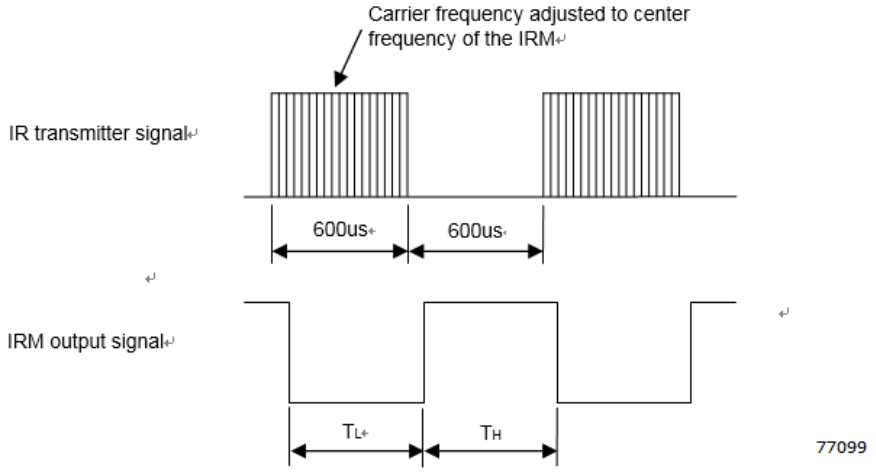

Fig.2 test signal and IRM output signal for reception distance and viewing angle test

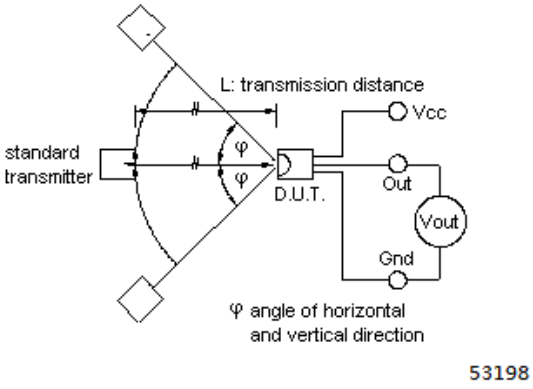

Fig.3 Measuring System

Copyright © 2023, TONYU All Rights Reserved.

Typical Electro-Optical Characteristics Curves

Fig.4 Relative Responsibility vs. Wavelength

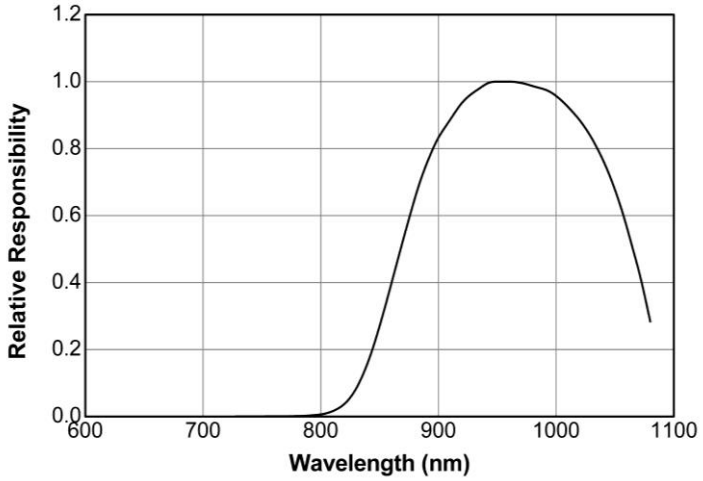

Fig.5 Relative Sensitivity vs Angle

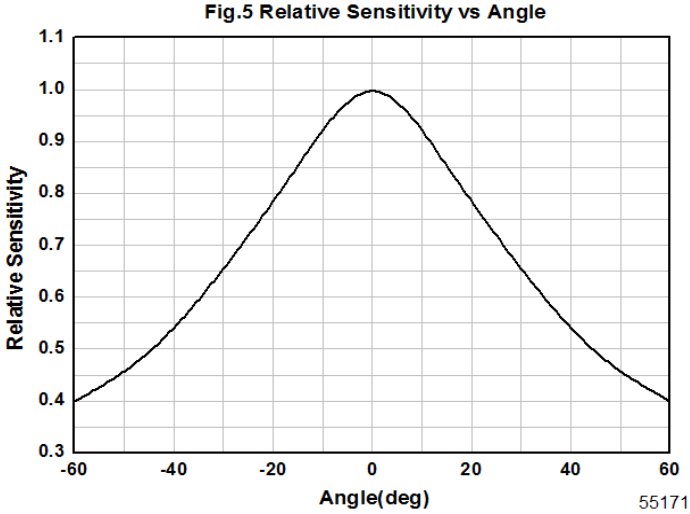

55171

Fig.6 Variation Output Pulse Width vs. Distance

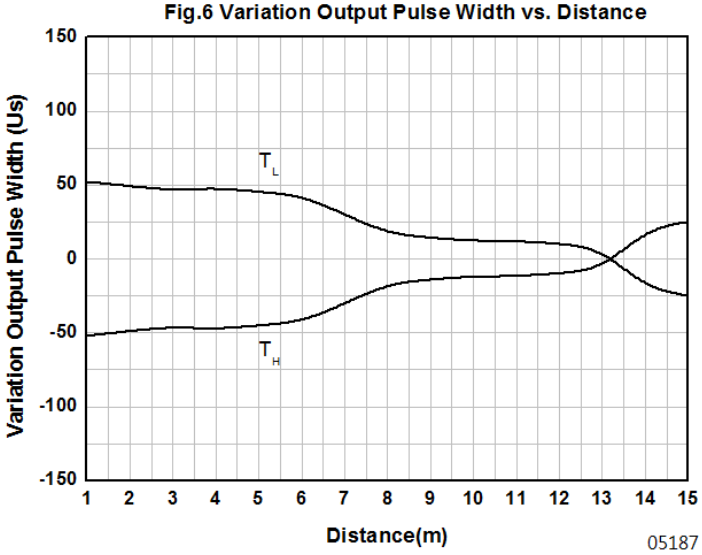

05187

Fig.7 Relative Sensitivity vs. Supply Voltage

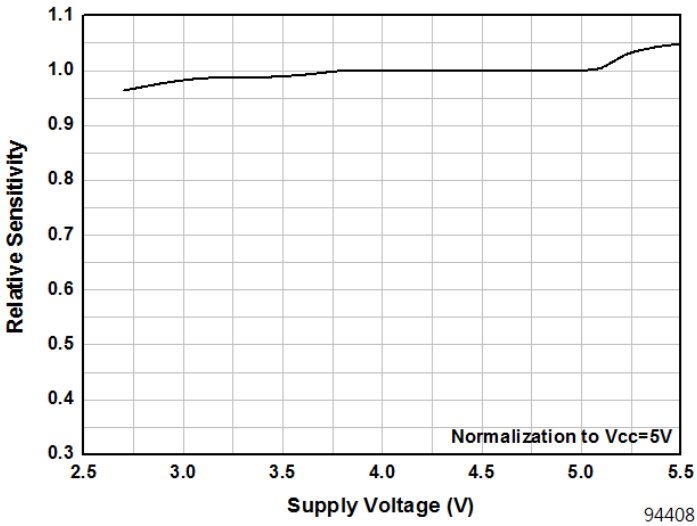

94408

Fig.8 Relative Sensitivity vs. Carrier Frequency

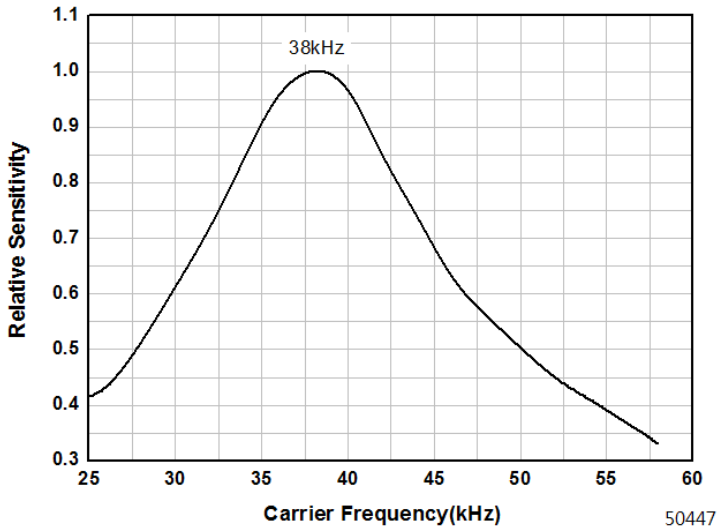

50447

Copyright © 2023, TONYU All Rights Reserved.

Application considerations

IRM IR receiver modules are high gain analog components to reach a long reception range. However, due to the high gain, they are also sensitive to noise from the power supply like V_{cc} ripple. Noise on the power supply can reduce the reception range of the IRM or cause output glitches and corrupted data. To protect the IRM receiver from power supply noise, a RC filter must be connected as close as possible to the V_{cc} and GND pins of the IRM. The circuit below in figure 9 shows the configuration of the RC filter and the required values. Ceramic or tantalum capacitor should be used, as standard electrolytic capacitors are only suitable for low frequencies and might not be able to filter noise in the frequency range of the IRM. The IRM receiver is most sensitive to noise which is at the carrier frequency or close to the carrier frequency. When using a switching mode power supply, the switching frequency must not be the same as the carrier frequency of the IRM. A gap of at least 20kHz between the switching frequency of the power supply and the IRM carrier frequency is recommended.
If the trace from the IRM output pin to the decoder IC on the PCB is long, the parasitic capacitance might be high causing slow rise times of the IRM output signal. In such case, an additional pull up resistor of 10kOhm or higher can be added at the IRM output to reduce the influence of parasitic trace capacitance.

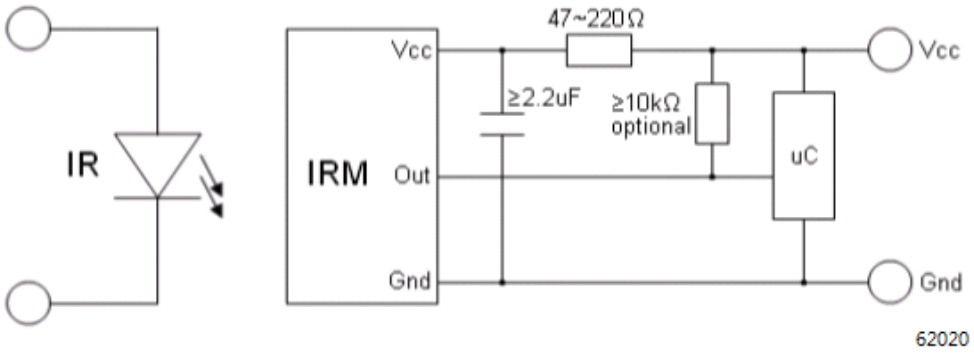

Fig.9: application circuit

Code compatibility

DYWH-IRM-36xxJF receiver modules are mainly designed for remote control applications which require very high noise immunity. Hence the IR code compatibility is matched for the most common IR protocols. To guarantee a proper data signal reception, a few points need to be taken into consideration.
The signal transmission must be carried out in data packages with limited length followed by a data pause time of a certain length. Continuous data transmission is not applicable as such kind of signal will be judged as noise and suppressed after a short time. If an IR protocol is not listed in this table, the compatibility needs to be checked according to the burst times, gap times, data package length and data pause time. The required limits for these items are shown in table 1 “acceptable IR signal timings”.

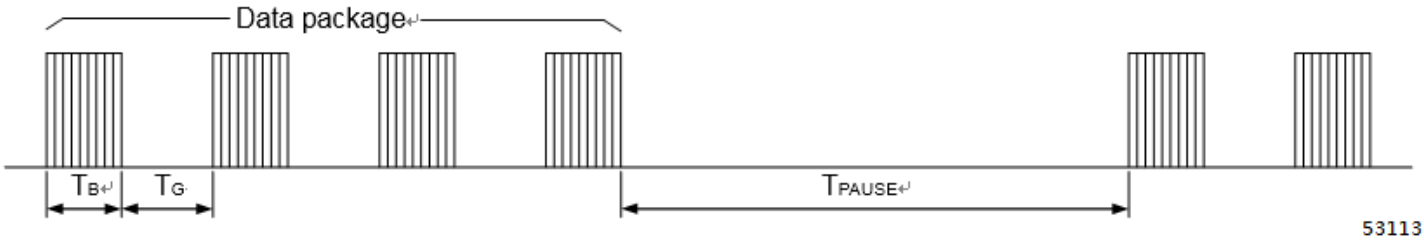

Fig.10: general IR data structure

	DYWH-IRM-3636JF DYWH-IRM-3638JF DYWH-IRM-3640JF
Min. burst length T_B	200us
Min. gap length T_G	300us

Table 1: acceptable IR timings

Copyright © 2023, TONYU All Rights Reserved.

Operation under noisy environment

DYWH-IRM-36xxJF receiver modules are designed for high light noise immunity, especially for noise from fluorescent and energy saving lamps and noise from TFT TVs with CCFL backlight. The receiver is able to suppress most optical noise, but the presence of any kind of optical noise will cause shorter reception range because the AGC will reduce the gain to suppress the noise.

The presence of noise can also affect the output pulse jitter. In such case, the output pulse jitter shown in the electro-optical specification above, might not be valid anymore and bigger pulse jitter can occur. This behavior needs to be considered when tuning the timing limits of the decoder. It is recommended to use the output pulse variation shown in the electro-optical specifications above as a base to set the timing limits of the decoder. However, due to different protocols and environmental conditions, other timing limits might result in better performance and decoding security. This needs to be verified for the specific application by testing under different noise conditions.

Device Marking

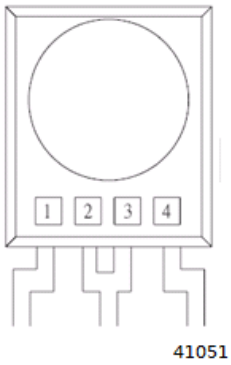

41051

Notes

1 denotes Year code
2 denotes Month code
3 denotes Device number
4 denotes Carrier frequency

Copyright © 2023, TONYU All Rights Reserved.

Package Dimension

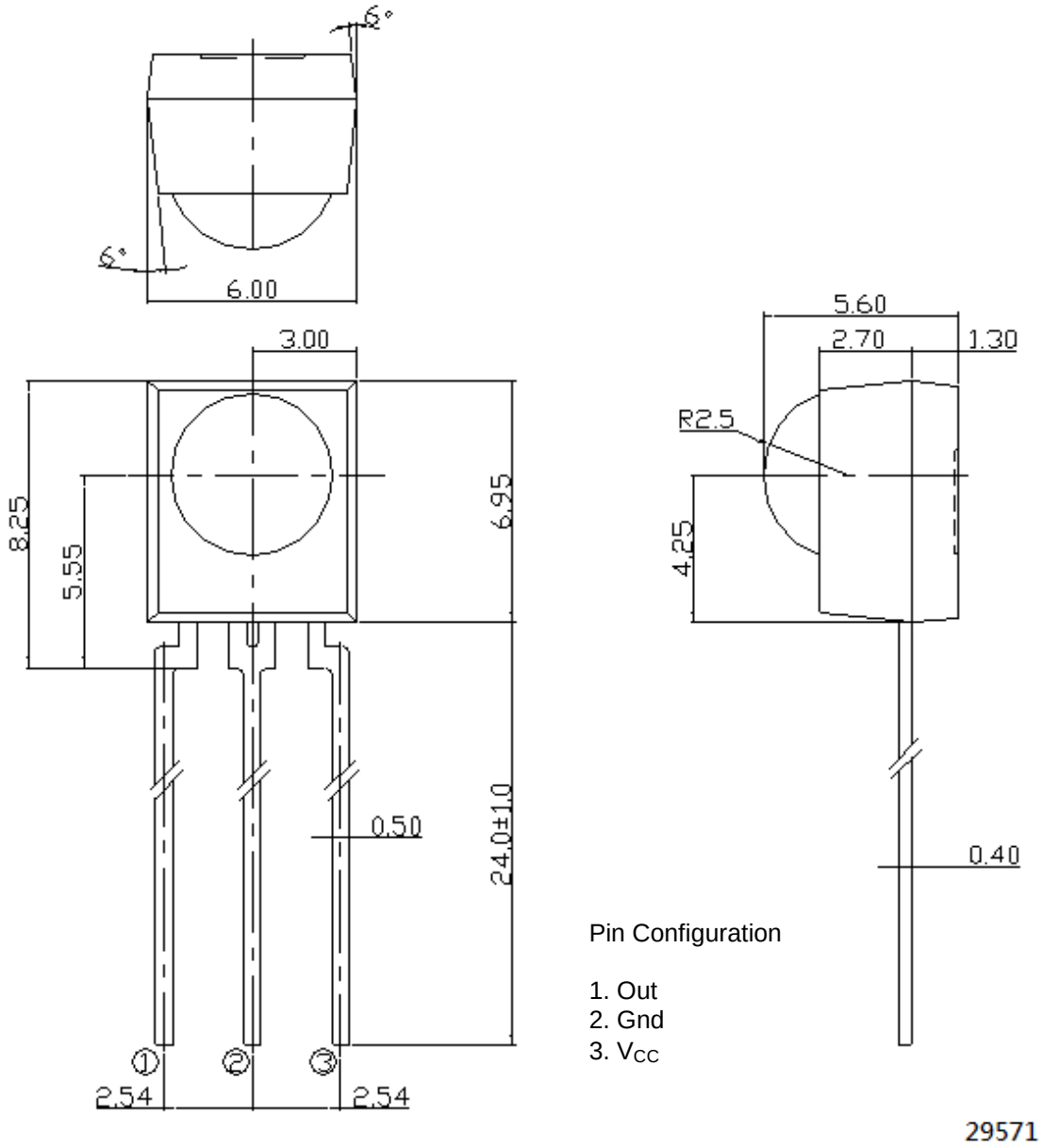

Pin Configuration

1. Out
2. Gnd
3. V_{CC}

Notes:

1. Tolerances unless mentioned ±0.5mm. Unit: mm
2. Dimensions in mm

Packing Quantity

500 pcs / Bag
4 Bags / 1Box
10 Boxes / Carton

Copyright © 2023, TONYU All Rights Reserved.

Application Restrictions

1. TONYU reserves the right(s) on the adjustment of product material mix for the specification.
2. The product meets TONYU published specification for a period of twelve (12) months from date of shipment.
3. The graphs shown in this datasheet are representing typical data only and do not show guaranteed values.
4. When using this product, please observe the absolute maximum ratings and the instructions for using outlined in these specification sheets. TONYU assumes no responsibility for any damage resulting from the use of the product which does not comply with the absolute maximum ratings and the instructions included in these specification sheets.
5. These specification sheets include materials protected under copyright of TONYU. Reproduction in any form is prohibited without obtaining TONYU's prior consent.
6. This product is not intended to be used for military, aircraft, automotive, medical, life sustaining or life saving applications or any other application which can result in human injury or death. Please contact authorized TONYU sales agent for special application request.

Copyright © 2023, TONYU All Rights Reserved.