High Sensitivity Micropower Omnipolar Hall-Effect Switch AH9247

General Description

The AH9247 is an ultra-sensitive Hall-effect switch with digital latched output, mainly designed for battery-operation, handheld equipments.

Special CMOS process is used for low-voltage and low-power requirement. A chopper stabilized amplifier improves stability of magnetic switch points. A sleep-awake logic controls the IC in sleep time or awake time. This function will reduce the average operating current of the IC. During the awake time, the output is changed with the magnetic flux density. During the sleep time, the output is latched in its previous state and the current consumption will reduce to some μA.

The IC switching behaviour is omnipolar, either north or south pole sufficient strength will turn the output on. If the magnetic flux density is larger than operating point (B_{OP}), the output will be turned on; if it is less than releasing point (B_{RP}), the output will be turned off.

The AH9247 is available in TO-92S-3, SOT-23-3 and DFN-2×2-3 packages which are optimized for most applications.

Features

- Micropower Operation
- 2.5 to 5.5V Power Supply
- Switching for Both Poles of a Magnet (Omnipolar)
- Stabilized Chopper
- Superior Temperature Stability
- Digital Output Signal
- Built-in Pull-up Resistor
- ESD (HBM) 6000V

Applications

- Cover Switch in Notebook PC/PDA
- Handheld Wireless Application Awake Switch
- Magnet Switch in Low Duty Cycle Applications

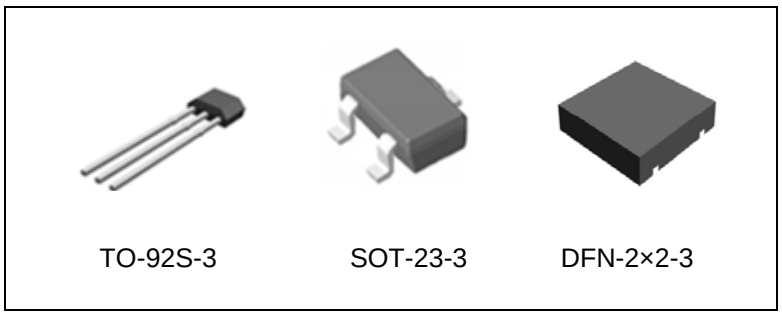

Figure 1. Package Types of AH9247

Pin Configuration

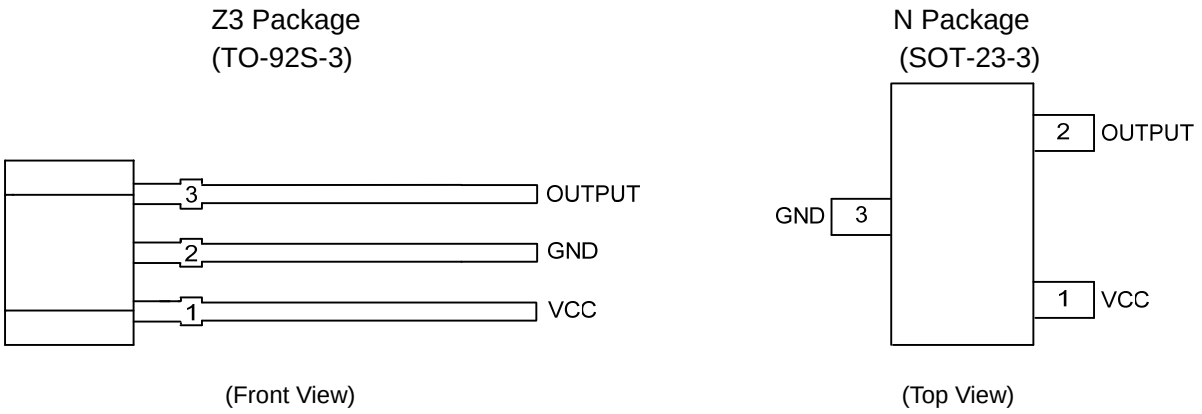

Figure 2. Pin Configuration of AH9247

Pin Description

Pin Number			Pin Name	Function
TO-92S-3	SOT-23-3	DFN-2×2-3		
1	1	1	VCC	Power supply pin
2	3	3	GND	Ground pin
3	2	2	OUTPUT	Output pin

Functional Block Diagram

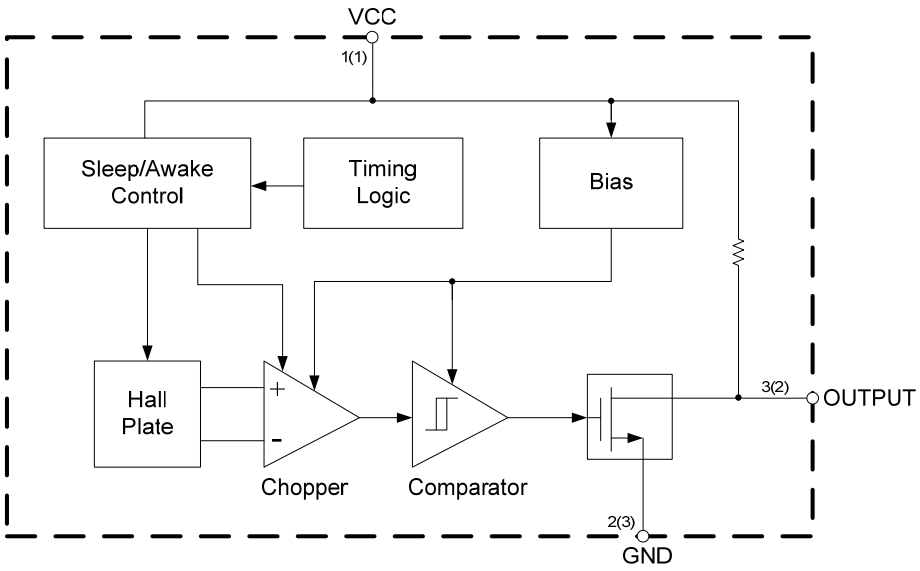

A (B)
A for TO-92S-3
B for SOT-23-3 and DFN-2×2-3

Figure 3. Functional Block Diagram of AH9247

Ordering Information

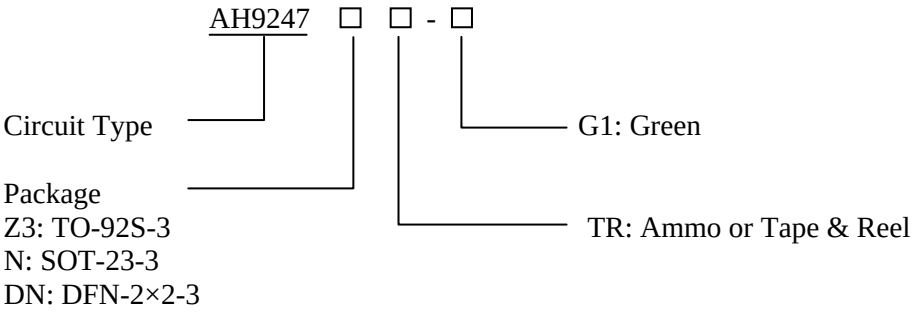

Package	Temperature Range	Part Number	Marking ID	Packing Type
TO-92S-3	-40 to 85°C	AH9247Z3TR-G1	9247	Ammo
SOT-23-3		AH9247NTR-G1	GX8	Tape & Reel
DFN-2×2-3		AH9247DNTR-G1	JF	Tape & Reel

BCD Semiconductor's Pb-free products, as designated with "G1" suffix in the part number, are RoHS compliant and green.

Absolute Maximum Ratings (T_A=25°C, Note 1)

Parameter	Symbol	Value		Unit
Supply Voltage	V_{CC}	7		V
Supply Current (Fault)	I_{CC}	6		mA
Output Voltage	V_{OUT}	7		V
Output Current	I_{OUT}	2		mA
Magnetic Flux Density	B	Unlimited		Gauss
Power Dissipation	P_D	TO-92S-3	400	mW
		SOT-23-3	230	
		DFN-2×2-3	230	
Storage Temperature	T_{STG}	-55 to 150		°C
Junction Temperature	T_J	150		°C
ESD (Human Body Model) (Note 2)		6000		V
ESD (Machine Model) (Note 2)		400		V

Note 1: Stresses greater than those listed under “Absolute Maximum Ratings” may cause permanent damage to the device. These are stress ratings only, and functional operation of the device at these or any other conditions beyond those indicated under “Recommended Operating Conditions” is not implied. Exposure to “Absolute Maximum Ratings” for extended periods may affect device reliability.
Note 2: Electronic semiconductor products are sensitive to Electro Static Discharge (ESD). Always observe Electro Static Discharge control procedures whenever handling semiconductor products.

Recommended Operating Conditions

Parameter	Symbol	Min	Max	Unit
Supply Voltage	V_{CC}	2.5	5.5	V
Operating Temperature	T_{OP}	-40	85	°C

Electrical Characteristics

V_{CC}=3V, T_A=25°C, unless otherwise specified.

Parameter	Symbol	Conditions	Min	Typ	Max	Units
Supply Voltage	V_{CC}	Operating	2.5	3	5.5	V
Supply Current	I_{AW}	Awake		1.8	3	mA
	I_{SL}	Sleep		4	10	μA
	I_{AVG}	Average		8	15	μA
Output Current	I_{OUT}				1.0	mA
Saturation Voltage	V_{SAT}	I_{OUT}=1.0mA			0.4	V
Awake Mode Time	t_{AW}	Operating		120		μs
Sleep Mode Time	t_{SL}	Operating		80	120	ms
Duty Cycle	D			0.15		%
Chopper Frequency	f_C			15		kHz

Magnetic Characteristics (Note 3)

V_{CC}=3V, T_A=25°C, unless otherwise specified.

For TO-92S-3 Package

Parameter	Symbol	Conditions	Min	Typ	Max	Unit
Operating Point	B_{OPS}	South pole to branded side $B>B_{OPS}$,V_{OUT}=low(output on)	15	30	55	Gauss
	B_{OPN}	North pole to branded side $B>B_{OPN}$,V_{OUT}=low(output on)	-55	-30	-15	Gauss
Releasing Point	B_{RPS}	South pole to branded side $B<B_{RPS}$,V_{OUT}=high(output off)	5	20	45	Gauss
	B_{RPN}	North pole to branded side $B<B_{RPN}$,V_{OUT}=high(output off)	-45	-20	-5	Gauss
Hysteresis	B_{HYS}	$\lvert B_{OPX} - B_{RPX} \rvert$ (Note4)		10		Gauss

Magnetic Characteristics (Note 3) (Continued)

V_{CC}=3V, T_A=25°C, unless otherwise specified.

For SOT-23-3 and DFN-2×2-3 Packages

Parameter	Symbol	Conditions	Min	Typ	Max	Unit
Operating Point	B_{OPS}	South pole to branded side B>B_{OPS},V_{OUT}=low(output on)	20	30	40	Gauss
	B_{OPN}	North pole to branded side B>B_{OPN},V_{OUT}=low(output on)	-40	-30	-20	Gauss
Releasing Point	B_{RPS}	South pole to branded side B<B_{RPS},V_{OUT}=high(output off)	5	20	32	Gauss
	B_{RPN}	North pole to branded side B<B_{RPN},V_{OUT}=high(output off)	-32	-20	-5	Gauss
Hysteresis	B_{HYS}	| B_{OPX} - B_{RPX} | (Note4)		10		Gauss

Note 3: The specifications stated here are guaranteed by design. 1 Gauss=0.1mT
Note 4: B_{OPX}=operating point (output turns on); B_{RPX}=releasing point (output turns off)

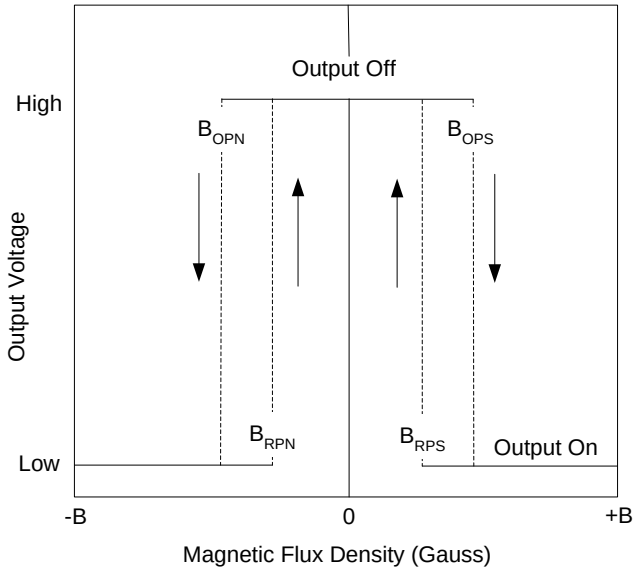

Figure 4. Output Voltage vs. Magnetic Flux Density

Test Conditions

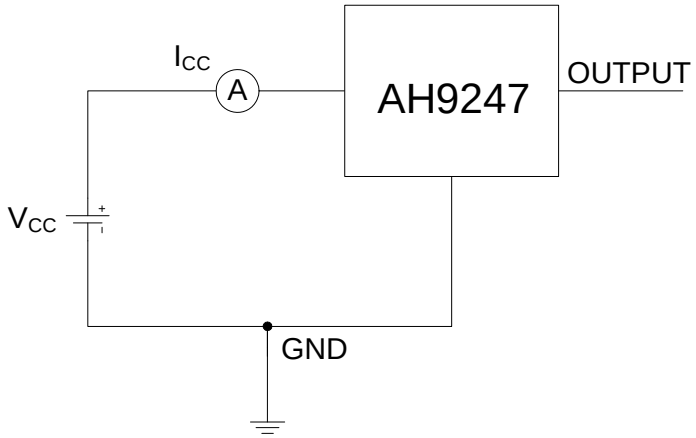

Figure 5. Average Supply Current (Note 5, Note 6)

Note 5: I_{CC} represents the average supply current. OUTPUT is open during measurement.
Note 6: The device is put under magnetic field with $B<B_{RP}$.

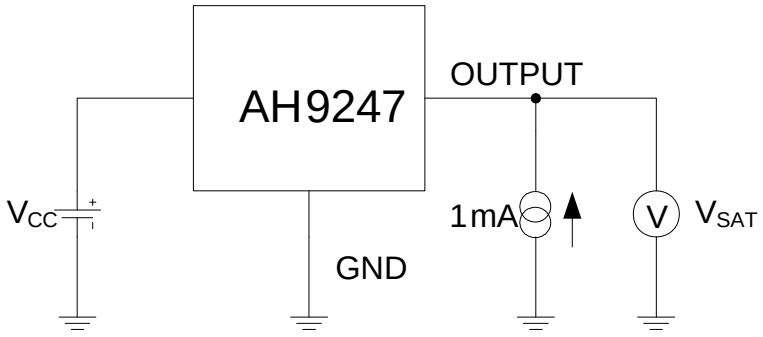

Figure 6. Output Saturation Voltage (Note 7, Note 8)

Note 7: The output saturation voltage V_{SAT} is measured at V_{CC}=2.5V and V_{CC}=5.5V
Note 8: The device is put under magnetic field with $B>B_{OP}$

Test Conditions (Continued)

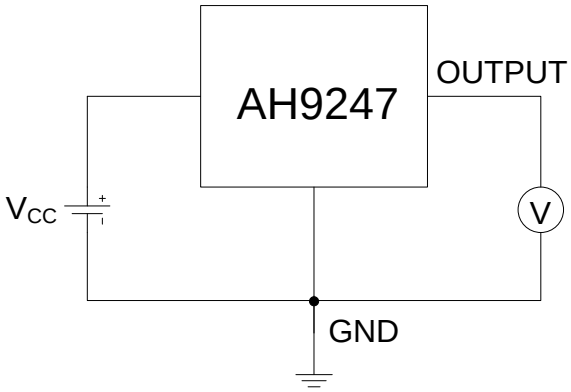

Figure 7. Magnetic Thresholds (Note 9, Note10)

Note 9: B_{OP} is determined by putting the device under magnetic field swept from $B_{RP(min)}$ to $B_{OP(max)}$ until the output is switched on.
Note 10: B_{RP} is determined by putting the device under magnetic field swept from $B_{OP(max)}$ to $B_{RP(min)}$ until the output is switched off.

Typical Performance Characteristics

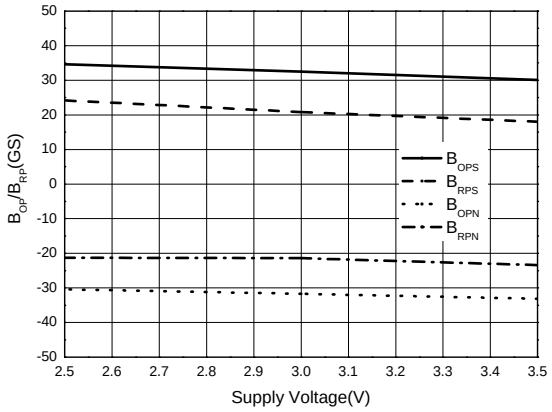

Figure 8. B_{OP}/B_{RP} vs. Supply Voltage

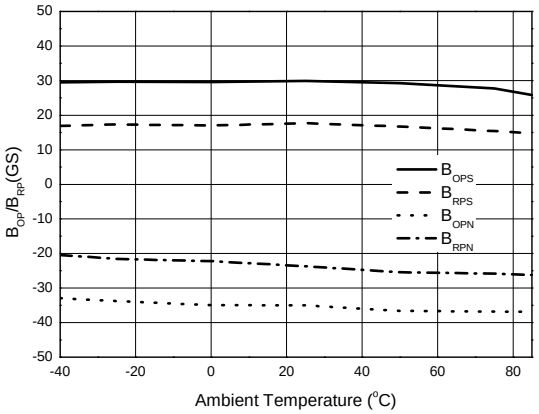

Figure 9. B_{OP}/B_{RP} vs. Ambient Temperature

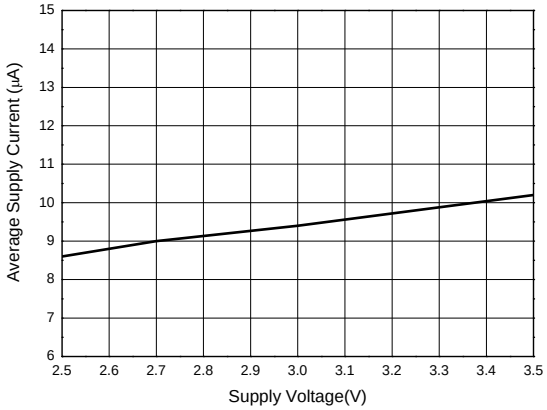

Figure 10. Average Supply Current vs. Supply Voltage

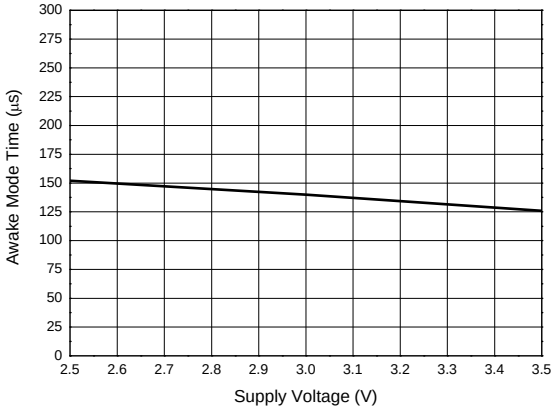

Figure 11. Awake Mode Time vs. Supply Voltage

Typical Performance Characteristics (Characteristic)

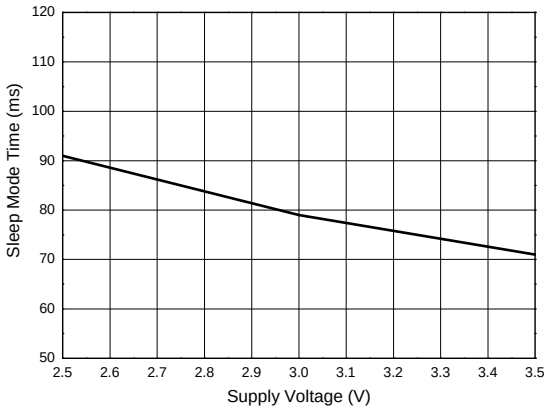

Figure 12. Sleep Mode Time vs. Supply Voltage

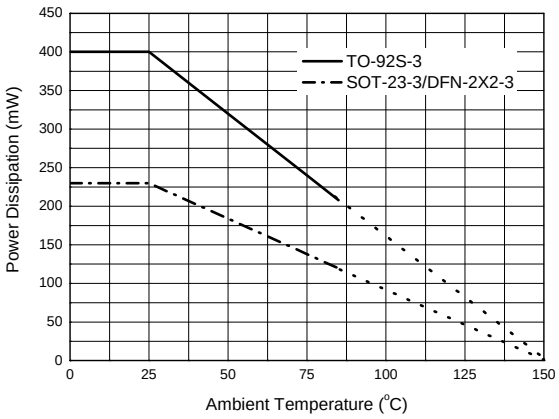

Figure 13. Power Dissipation vs. Ambient Temperature

Typical Application

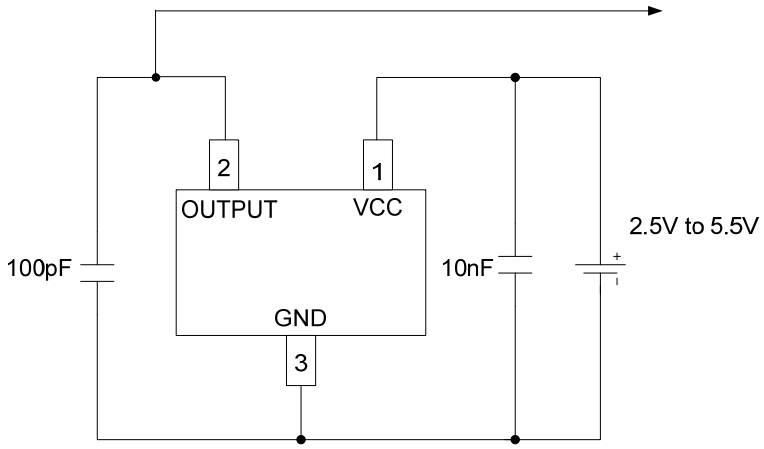

Figure 14. Typical Application Circuit of AH9247

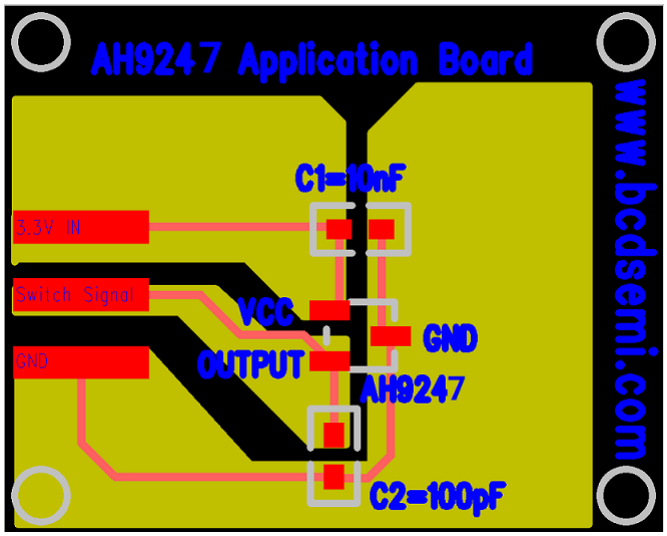

Figure 15. Typical Layout Pattern of AH9247 (Note 11)

Typical Application (Continued)

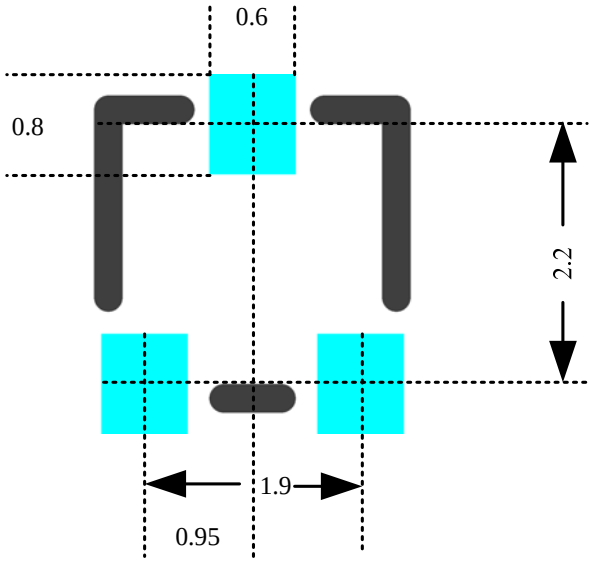

Figure 16. AH9247 Layout Pattern Mechanical Dimensions (Unit: mm)

Note 11:

The AH9247 is an ultra-sensitive Hall-effect switch with digital latched output. It is very sensitive for the magnetic field. As a result, extreme care is required with respect to the pattern layout when designing application circuits. (Figure 15. is a typical application reference, Figure 16. is AH9247 layout pattern mechanical dimensions.)

*1. Ground and VCC Wiring Layout

Insert a capacitor (recommended value: 10nF or larger) as near as possible to the space between the VCC pin and GND pin.

*2. Positioning the External Components

The external components such as C2 (recommended value: 100pF) that are connected to ground must be connected with lines that are as short as possible. External components connected between IC pins must be placed as near to the pins as possible.

*3. Pad Layout Around Hall Switch

Place some large current lines and some elements that have magnetism, such as speaker and DC Fan, as far to the Hall switch as possible.

*4. GND Pattern

If possible, GND pattern is as large as possible so that the power dissipation from the NB inner case or solder machine can dissipate quickly.

Mechanical Dimensions

TO-92S-3 **Unit: mm(inch)**

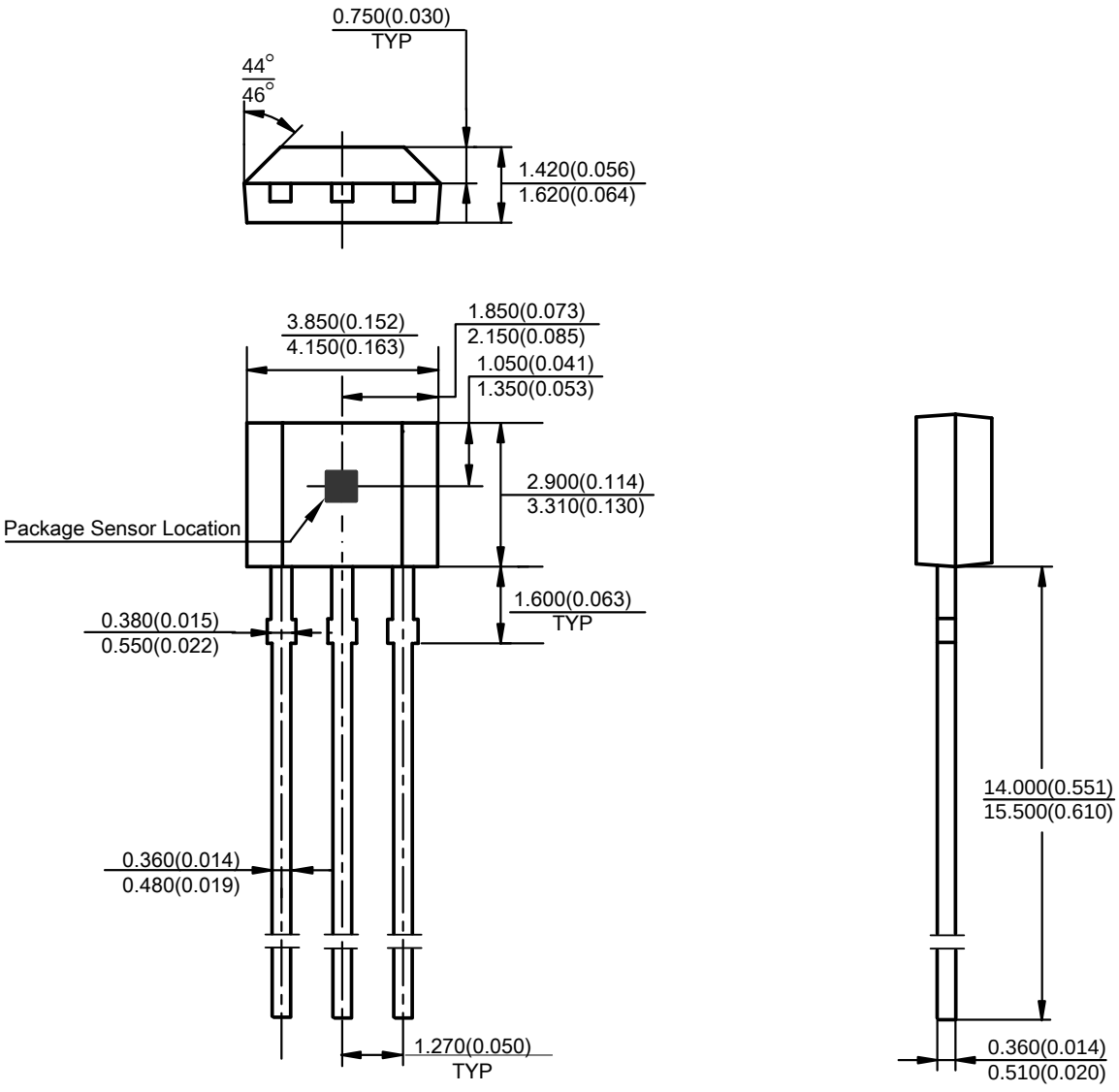

Mechanical Dimensions (Continued)

SOT-23-3 **Unit: mm(inch)**

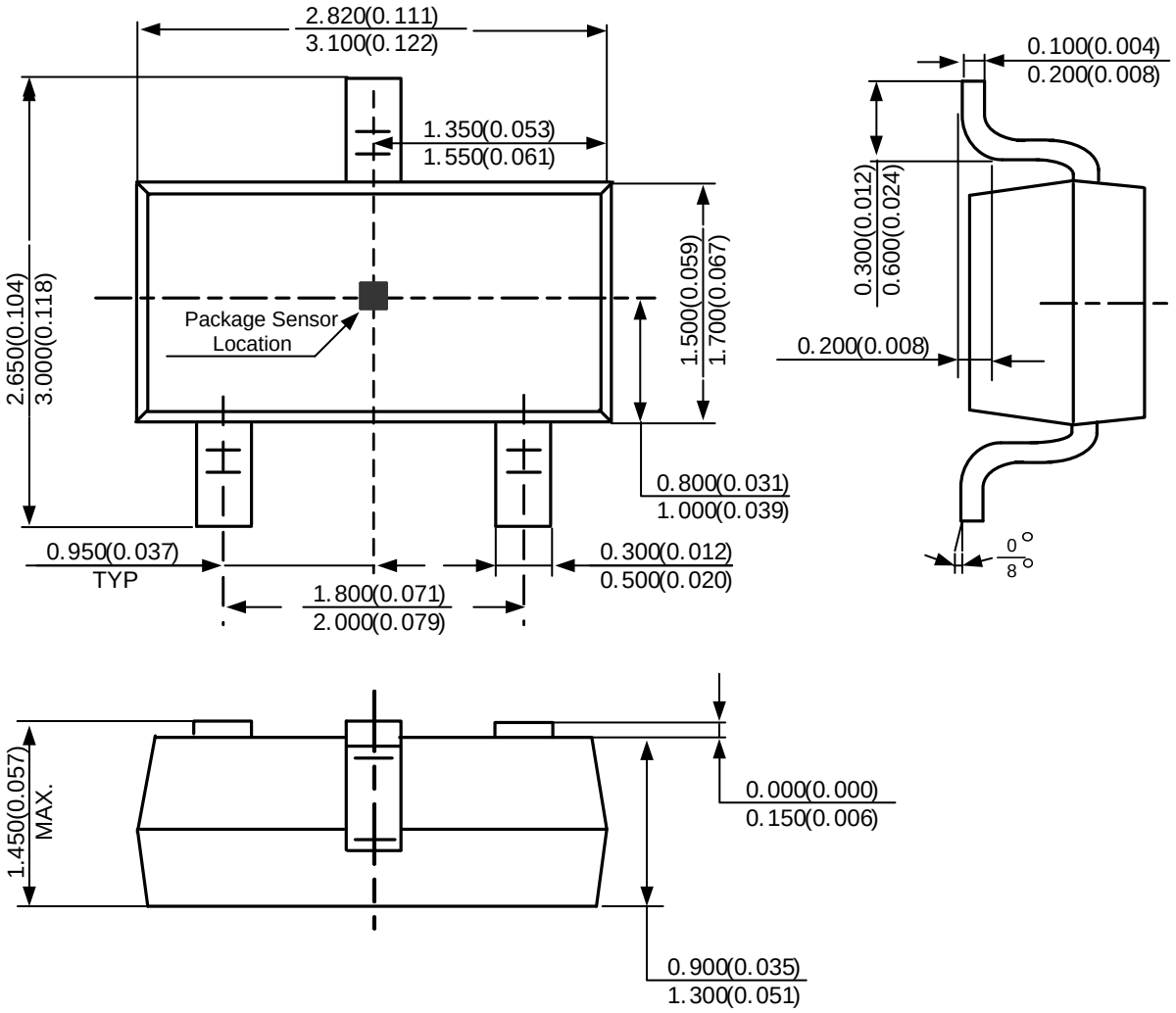

Mechanical Dimensions (Continued)

DFN-2×2-3 **Unit: mm(inch)**

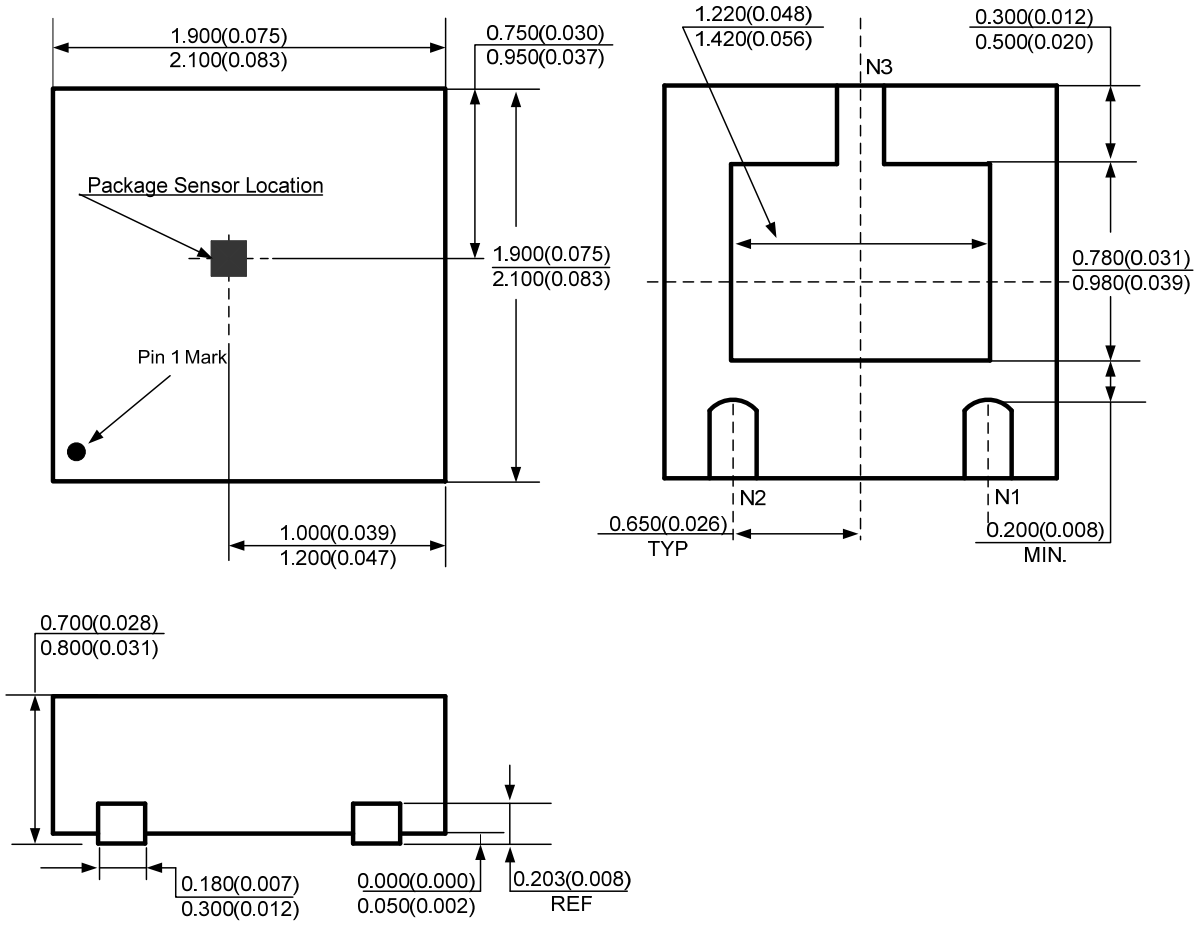



BCD Semiconductor Manufacturing Limited

http://www.bcdsemi.com

IMPORTANT NOTICE

BCD Semiconductor Manufacturing Limited reserves the right to make changes without further notice to any products or specifications herein. BCD Semiconductor Manufacturing Limited does not assume any responsibility for use of any its products for any particular purpose, nor does BCD Semiconductor Manufacturing Limited assume any liability arising out of the application or use of any its products or circuits. BCD Semiconductor Manufacturing Limited does not convey any license under its patent rights or other rights nor the rights of others.

MAIN SITE

- Headquarters
BCD (Shanghai) Micro-electronics Limited
No. 1600, Zi Xing Road, Shanghai ZiZhu Science-based Industrial Park, 200241, P. R.C.
Tel: +86-021-2416-2266, Fax: +86-021-2416-2277

- Wafer Fab
Shanghai SIM-BCD Semiconductor Manufacturing Co., Ltd.
800 Yishan Road, Shanghai 200233, China
Tel: +021-6485-1491, Fax: +86-021-5450-0008

REGIONAL SALES OFFICE

Shenzhen Office
Shanghai SIM-BCD Semiconductor Manufacturing Co., Ltd., Shenzhen Office
Unit A Room 1203,Skyworth Bldg., Gaoxin Ave.1.S., Nanshan District
Shenzhen 518057, China
Tel: +86-0755-8660-4900, Fax: +86-0755-8660-4958

Taiwan Office (Taipei)
BCD Semiconductor (Taiwan) Company Limited
3F, No.17, Lane 171, Sec. 2, Jiu-Zong Rd., Nei-Hu Dist., Taipei(114), Taiwan, R.O.C
Tel: +886-2-2656 2808
Fax: +886-2-2656-2806/26562950

Taiwan Office (Hsinchu)
BCD Semiconductor (Taiwan) Company Limited
8F, No.176, Sec. 2, Gong-Dao 5th Road, East District
HsinChu City 300, Taiwan, R.O.C
Tel: +886-3-5160181, Fax: +886-3-5160181

USA Office
BCD Semiconductor Corp.
48460 Kato Road, Fremont, CA 94538, USA
Tel: +1-510-668-1950
Fax: +1-510-668-1990

Korea Office
BCD Semiconductor Limited Korea office.
Room 101-1112, Digital-Empire II, 486 Sin-dong,
Yeongtong-Gu, Suwon-city, Gyeonggi-do, Korea
Tel: +82-31-695-8430