DRV10982-Q1 汽车三相无传感器 BLDC 电机驱动器

1 特性

- 符合汽车应用要求
- 具有符合 AEC-Q100 标准的下列特性：
  - 器件温度等级 1：-40°C 至 125°C 的环境工作温度范围
  - 器件 HBM ESD 分级等级 1C
  - 器件 CDM ESD 分类等级 C4A
- 工作电压范围：
  - 电机运行，6.2V 至 28V
  - 保持寄存器设置，4.5V 到 45V
- 支持高达 45V 的负载转储电压
- 总驱动器 H + L $r_{DS(on)}$
  - T_A = 25°C 时为 300mΩ
  - T_A = 125°C 时为 400mΩ
- 驱动电流：2A 持续绕组电流（峰值为 3A）
- 用于 EMI 管理的可配置输出 PWM 压摆率和频率
- 无传感器专有反电动势 (BEMF) 控制方案（无需霍尔传感器）
- 连续正弦 180° 换向
- 初始位置检测算法可避免启动过程中回旋
- 无需外部检测电阻
- 灵活的用户界面选项：
  - I^2C 接口：访问寄存器以获取命令和反馈
  - 专用 SPEED 引脚：接受模拟或 PWM 输入
  - 专用 FG 引脚：提供 TACH 反馈
  - 可通过 EEPROM 定制旋转曲线
  - 使用 DIR 引脚进行正向/反向控制
- 集成式降压转换器可高效地为内部和外部电路提供 5V 和 3.3V LDO
- 待机型号提供的电源电流为 8.5mA (DRV10982SQ)
- 休眠型号的电源电流为 48 μA (DRV10982Q)
- 保护特性
  - 过流保护（相间保护、相接地保护和相到 V_{CC} 短路保护）
  - 锁定检测
  - 防电压浪涌 (AVS) 保护
  - UVLO 保护
  - 热关断保护
- 热增强型封装

2 应用

- 小型汽车泵和风扇
- 座椅通风风扇
- 摩托车燃油泵
- HEV 电池冷却风扇

3 说明

DRV10982-Q1 器件是一款带有集成式电源 MOSFET 的三相无传感器电机驱动器，可提供高达 2A 的连续驱动电流。该器件专为成本敏感型、低噪音、需要少量外部组件的风扇和泵应用而设计。

DRV10982-Q1 器件可保持低至 4.5V 的寄存器设置，并以低至 6.2V 的电源电压将电流传输给电机。如果电源电压高于 28V，则器件停止驱动电机并保护 DRV10982-Q1 电路。该功能能够处理高达 45V 的负载转储情况。

TI 提供了 DRV10983-Q1 调整指南，便于快速设置和调整器件以获得出色性能。

器件选项：

- DRV10982Q：休眠型号
- DRV10982SQ：待机型号

器件信息(1)

器件型号	封装	封装尺寸（标称值）
DRV10982-Q1	HTSSOP (24)	7.80mm × 6.40mm

(1) 如需了解所有可用封装，请参阅数据表末尾的可订购产品附录。

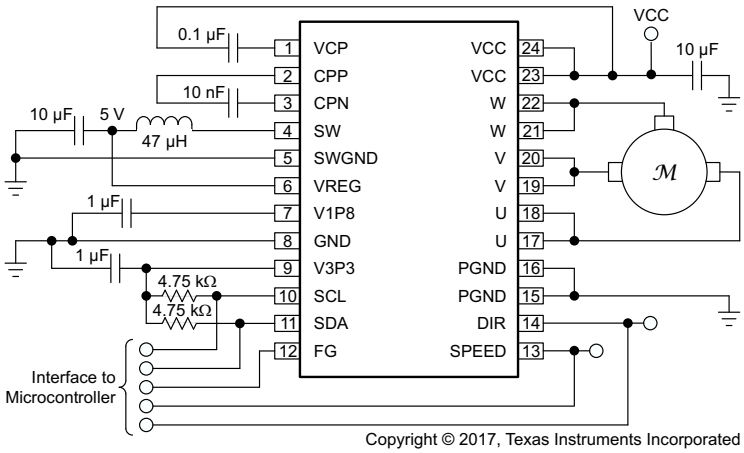

Copyright © 2017, Texas Instruments Incorporated

应用原理图

本文档旨在为方便起见，提供有关 TI 产品中文版本的信息，以确认产品的概要。有关适用的官方英文版本的最新信息，请访问 www.ti.com，其内容始终优先。TI 不保证翻译的准确性和有效性。在实际设计之前，请务必参考最新版本的英文版本。

Table of Contents

1 特性.....1
2 应用.....1
3 说明.....1
4 Revision History.....2
5 说明 (续).....3
6 Pin Configuration and Functions.....3
7 Specifications.....5
7.1 Absolute Maximum Ratings.....5
7.2 ESD Ratings.....5
7.3 Recommended Operating Conditions.....6
7.4 Thermal Information.....6
7.5 Electrical Characteristics.....7
7.6 Typical Characteristics.....12
8 Detailed Description.....13
8.1 Overview.....13
8.2 Functional Block Diagram.....14
8.3 Feature Description.....14
8.4 Device Functional Modes.....21
8.5 Register Maps.....48
9 Application and Implementation.....65
9.1 Application Information.....65
9.2 Typical Application.....65
10 Power Supply Recommendations.....67
11 Layout.....68
11.1 Layout Guidelines.....68
11.2 Layout Example.....68
12 Device and Documentation Support.....69
12.1 Trademarks.....69
12.2 Receiving Notification of Documentation Updates.....69
12.3 Community Resources.....69
13 Mechanical, Packaging, and Orderable Information.....70
13.1 Package Option Addendum.....74

4 Revision History

注：以前版本的页码可能与当前版本的页码不同

Changes from Revision * (April 2020) to Revision A (October 2021)	Page
• 将器件状态从“预告信息”更改为“量产数据”	1

Copyright © 2023 Texas Instruments Incorporated

5 说明（续）

DRV10982-Q1 器件采用专有无传感器控制方案来提供持续正弦驱动，可大幅降低换向过程中通常会产生的纯音。该器件的接口设计简单而灵活。可直接通过 PWM、模拟、或 I²C 输入控制电机。可同时通过 FG 引脚和 I²C 接口获得电机转速反馈。

DRV10982-Q1 器件采用一个集成降压稳压器，可高效地将电源电压降至 5V，从而为内外部电路供电。3.3V LDO 也可用于为外部电路供电。该器件提供休眠模式和待机模式两种型号，可在电机停止运转时实现节能。待机模式 (8.5mA) 型号 (DRV10982SQ) 会使稳压器保持运行，而睡眠模式 (48μA) 型号 (DRV10982Q) 会使稳压器停止工作。对于使用稳压器为外部微控制器供电的应用，请使用待机模式型号。除对休眠和待机功能进行具体讨论的情况外，本数据表均使用 DRV10982-Q1 器件型号来指代这两种器件，即 DRV10982Q（休眠型号）和 DRV10982SQ（待机型号）。

用户可通过 I²C 接口对寄存器中的特定电机参数进行重新编程并可对 EEPROM 进行编程，从而帮助优化既定应用的性能。DRV10982-Q1 器件采用带有外露散热焊盘的高效散热型 HTSSOP 24 引脚封装。额定工作环境温度范围为 -40°C 至 125°C。

6 Pin Configuration and Functions

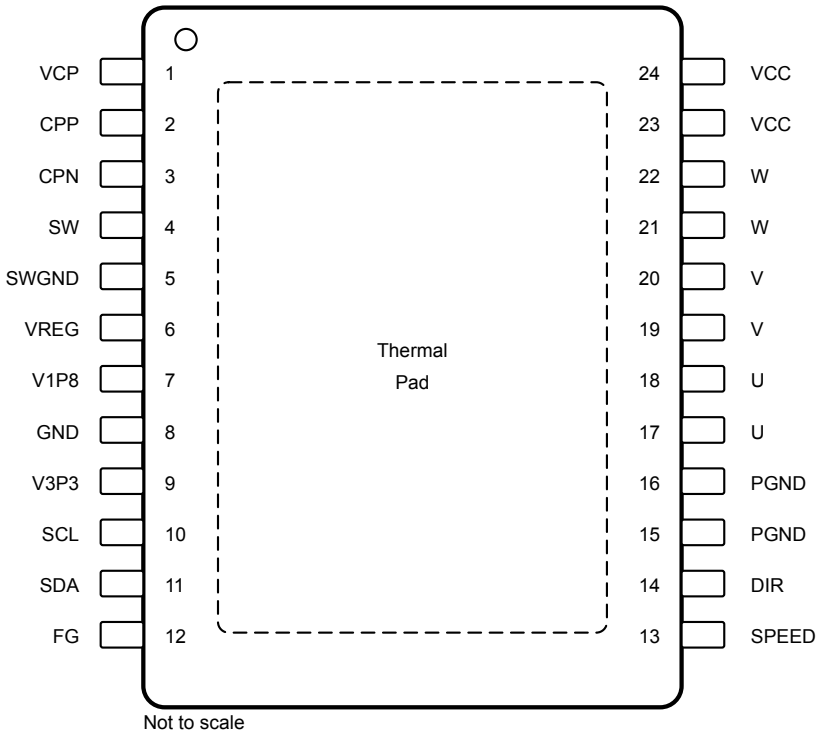

图 6-1. PWP PowerPAD™ Package 24-Pin HTSSOP With Exposed Thermal Pad Top View

表 6-1. Pin Functions

PIN		TYPE (1)	DESCRIPTION
N/AME	HTSSOP		
CPN	3	P	Charge pump pin 1, use a ceramic capacitor between CPN and CPP
CPP	2	P	Charge pump pin 2, use a ceramic capacitor between CPN and CPP
DIR	14	I	Direction; When low, phase driving sequence is U → V → W When high, phase driving sequence is U → W → V
FG	12	O	FG signal output indicates speed of motor
GND	8	P	Digital and analog ground

Copyright © 2023 Texas Instruments Incorporated

表 6-1. Pin Functions (continued)

PIN		TYPE (1)	DESCRIPTION
N/AME	HTSSOP		
PGND	15, 16	P	Power ground
SCL	10	I	I^2C clock signal
SDA	11	I/O	I^2C data signal
SPEED	13	I	Speed control signal for PWM or analog input speed command
SW	4	O	Step-down regulator switching node output
SWGND	5	P	Step-down regulator ground
U	17, 18	O	Motor U phase
V	19, 20	O	Motor V phase
V1P8	7	P	Internal 1.8-V digital core voltage. V1P8 capacitor must connect to GND. This is an output, but is not specified to drive external loads.
V3P3	9	P	Internal 3.3-V supply voltage. V3P3 capacitor must connect to GND. This is an output and may drive external loads not to exceed I_{V3P3_MAX}.
V_{CC}	23, 24	P	Device power supply
VCP	1	P	Charge pump output, use a ceramic capacitor between VCP and V_{CC}
VREG	6	P	Step-down regulator output and feedback point
W	21, 22	O	Motor W phase
Thermal pad (GND)	—	P	The exposed thermal pad must be electrically connected to the ground plane by soldering to the PCB for proper operation, and connected to the bottom side of the PCB through vias for better thermal spreading.

(1) I = Input, O = Output, I/O = Input/output, NC = No connect, P = Power

Copyright © 2023 Texas Instruments Incorporated

7 Specifications

7.1 Absolute Maximum Ratings

over operating ambient temperature range (1)

		MIN	MAX	UNIT
Input voltage(2)	V_{CC}	– 0.3	28	V
	V_{CC} during load dump (V_{CC} slew rate < 1 V/µs)	– 0.3	45	
	SPEED	– 0.3	4	
	PGND, SWGND	– 0.3	0.3	
	SCL, SDA	– 0.3	4	
	DIR	– 0.3	4	
Output voltage (2)	U, V, W	– 1	30	V
	SW	– 1	30	
	VREG	– 0.3	7	
	FG	– 0.3	4	
	VCP	– 0.3	V_{CC} + 6	
	CPN	– 0.3	30	
	CPP	– 0.3	V_{CC} + 6	
	V3P3	– 0.3	4	
	V1P8	– 0.3	2.5	
T_{J_MAX}	Maximum junction temperature	– 40	150	°C
T_{stg}	Storage temperature	– 55	150	°C

(1) Stresses beyond those listed under *Absolute Maximum Ratings* may cause permanent damage to the device. These are stress ratings only, which do not imply functional operation of the device at these or any other conditions beyond those indicated under *Recommended Operating Conditions*. Exposure to absolute-maximum-rated conditions for extended periods may affect device reliability.
(2) All voltage values are with respect to the ground terminal (GND) unless otherwise noted.

7.2 ESD Ratings

			VALUE	UNIT
$V_{(ESD)}$	Electrostatic discharge	Human body model (HBM), per AEC Q100-002, all pins (1)	±2000	V
		Charged device model (CDM), per AEC Q100-011, all pins	±750	

(1) AEC Q100-002 indicates that HBM stressing shall be in accordance with the ANSI/ESDA/JEDEC JS-001 specification.

Copyright © 2023 Texas Instruments Incorporated

7.3 Recommended Operating Conditions

		MIN	NOM	MAX	UNIT
Supply voltage	V_{CC}, register contents preserved	4.5	12	45	V
	V_{CC}, motor operational	6.2	12	28	
Voltage range	U, V, W	–0.7		29	V
	SCL, SDA, FG, SPEED, DIR	–0.1	3.3	3.6	
	PGND, GND, SWGND	–0.1		0.1	
	VCP, CPP	–0.1		V_{CC} + 5	
	CPN	–0.1		V_{CC}	
	SW	–0.7		V_{CC}	
Current range	Step-down regulator output current (buck mode)			100	mA
	Step-down regulator output current (resistive mode)			5	
	V3P3 LDO output current (no load on VREG and V3P3 in resitive mode)			5	
T_A	Operating ambient temperature	–40		125	°C

7.4 Thermal Information

THERMAL METRIC(1)		DRV10982Q PWP (HTSSOP) 24 PINS	UNIT
$R_{\theta JA}$	Junction-to-ambient thermal resistance	36.1	°C/W
$R_{\theta JC(top)}$	Junction-to-case (top) thermal resistance	17.4	°C/W
$R_{\theta JB}$	Junction-to-board thermal resistance	14.8	°C/W
ψ_{JT}	Junction-to-top characterization parameter	0.4	°C/W
ψ_{JB}	Junction-to-board characterization parameter	14.5	°C/W
$R_{\theta JC(bot)}$	Junction-to-case (bottom) thermal resistance	1.1	°C/W

(1) For more information about traditional and new thermal metrics, see the *Semiconductor and IC Package Thermal Metrics* application report.

Copyright © 2023 Texas Instruments Incorporated

7.5 Electrical Characteristics

over operating voltage and ambient temperature range (unless otherwise noted)

PARAMETER		TEST CONDITIONS	MIN	TYP	MAX	UNIT
SUPPLY CURRENT (DRV10982Q)						
$I_{VccSLEEP1}$	Sleep current	V_{SPEED} = 0 V; VCC = 12 V; T_A = 25℃		48	54	μA
		V_{SPEED} = 0 V; VCC = 12 V; across temperature			81	
I_{Vcc}	Active current	V_{SPEED} > 0 V; buck regulator with inductor; no motor load		10	15	mA
		V_{SPEED} > 0 V; buck regulator with resistor; no motor load		13	16	
SUPPLY CURRENT (DRV10982SQ)						
$I_{VccSTBY}$	Standby current	V_{SPEED} = 0 V; buck regulator with inductor		8.5	14	mA
		V_{SPEED} = 0 V; buck regulator with resistor		11	15	
I_{Vcc}	Active current	V_{SPEED} > 0 V; buck regulator with inductor; no motor load		10	15	mA
		V_{SPEED} > 0 V; buck regulator with resistor; no motor load		13	16	
UVLO						
V_{UVLO_R}	UVLO rising threshold voltage		5.8	6	6.2	V
V_{UVLO_F}	UVLO falling threshold voltage		5.6	5.8	6	V
V_{UVLO_HYS}	UVLO threshold voltage hysteresis		170	195	220	mV
$V_{V1P8_UVLO_R}$	V1P8 UVLO rising threshold		1.5	1.6	1.7	V
$V_{V1P8_UVLO_F}$	V1P8 UVLO falling threshold		1.4	1.55	1.65	V
$V_{V3P3_UVLO_R}$	V3P3 UVLO rising threshold		2.7	2.85	2.95	V
$V_{V3P3_UVLO_F}$	V3P3 UVLO falling threshold		2.5	2.7	2.8	V
$V_{VREG_UVLO_R}$	VREG UVLO rising threshold		4	4.2	4.3	V
$V_{VREG_UVLO_F}$	VREG UVLO falling threshold		3.9		4.2	V
LDO OUTPUT						
V3P3	Output voltage	Buck regulator with inductor, 20-mA load	3.1	3.3	3.5	V
		Buck regulator with resistor, no load				
I_{V3P3_MAX}	Maximum load from V3P3	Only with inductor mode of buck operation, with resistor mode no load			20	mA
V1P8	Output voltage	No load	1.7	1.8	1.9	V
STEP-DOWN REGULATOR						
V_{REG}	Regulator output voltage	L_{SW} = 47 μH, C_{SW} = 10 μF I_{load} = 100 mA	4.5	5	5.5	V
		R_{SW} = 39 Ω, C_{SW} = 10 μF I_{load} = 5 mA				
$I_{REG_MAX_L}$	Maximum load from V_{REG} in switching mode	L_{SW} = 47 μH, C_{SW} = 10 μF			100	mA
$I_{REG_MAX_R}$	Maximum load from V_{REG} in linear mode	R_{SW} = 39 Ω, C_{SW} = 10 μF			5	mA

Copyright © 2023 Texas Instruments Incorporated

over operating voltage and ambient temperature range (unless otherwise noted)

PARAMETER		TEST CONDITIONS	MIN	TYP	MAX	UNIT
INTEGRATED MOSFET						
$r_{DS(ON)}$	Series resistance (H + L)	T_A = 25°C; $V_{(VCC)}$ > 6.5 V; Io = 1 A		300	400	mΩ
		T_A = 125°C; $V_{(VCC)}$ > 6.5V; Io = 1 A		400	550	
SPEED – ANALOG MODE						
V_{AN/A_FS}	Analog full-speed voltage		$V_{(V3P3)}$ × 0.9		$V_{(V3P3)}$	V
V_{AN/A_ZS}	Analog zero-speed voltage		0		100	mV
t_{SAM}	Sampling period for analog voltage on SPEED pin			320		µs
V_{AN/A_RES}	Analog voltage resolution			6.5		mV
SPEED – PWM DIGITAL MODE						
V_{DIG_IH}	PWM input high voltage		2.2			V
V_{DIG_IL}	PWM input low voltage				0.6	V
f_{PWM}	PWM input frequency		0.1		100	kHz
STANDBY MODE (DRV10982SQ)						
V_{EN_SB}	Analog voltage to enter standby mode	SpdCtrlMd = 0 (analog mode)			100	mV
V_{EX_SB}	Analog voltage to exit standby mode	SpdCtrlMd = 0 (analog mode)	0.17			V
$t_{EX_SB_ANA}$	Time needed to exit from standby mode	SpdCtrlMd = 0 (analog mode) V_{SPEED} > V_{EX_SB}	1		700	ms
$t_{EX_SB_DR_ANA}$	Time taken to drive motor after exiting standby mode	SpdCtrlMd = 0 (analog mode) V_{SPEED} > V_{EX_SB}; ISDen = 0; BrkDoneThr[2:0] = 0		350		ms
$t_{EX_SB_PWM}$	Time needed to exit from standby mode	SpdCtrlMd = 1 (PWM mode) V_{SPEED} > V_{DIG_IH}		2		µs
$t_{EX_SB_DR_PWM}$	Time taken to drive motor after exiting standby mode	SpdCtrlMd = 1 (PWM mode) V_{SPEED_DUTY} > 0; ISDen = 0; BrkDoneThr[2:0] = 0		350		ms
$t_{EN_SB_ANA}$	Time needed to enter standby mode	SpdCtrlMd = 0 (analog mode) V_{SPEED} < V_{EN_SB}; AvSIndEn = 0		6		ms
$t_{EN_SB_PWM}$	Time needed to enter standby mode	SpdCtrlMd = 1 (PMW mode) V_{SPEED} < $V_{DIG_IL;}$ AvSIndEn = 0		60		ms

Copyright © 2023 Texas Instruments Incorporated

over operating voltage and ambient temperature range (unless otherwise noted)

PARAMETER		TEST CONDITIONS	MIN	TYP	MAX	UNIT
SLEEP MODE (DRV10982Q)						
V_{EN_SL}	Analog voltage to enter sleep mode	SpdCtrlMd = 0 (analog mode)			100	mV
V_{EX_SL}	Analog voltage to exit sleep mode	SpdCtrlMd = 0 (analog mode)	2.2			V
$t_{EX_SL_ANA}$	Time needed to exit from sleep mode	SpdCtrlMd = 0 (analog mode) $V_{SPEED} > V_{EX_SL}$		2		µs
$t_{EX_SL_DR_ANA}$	Time taken to drive motor after exiting from sleep mode	SpdCtrlMd = 0 (analog mode) $V_{SPEED} > V_{EX_SL}$; ISDen = 0; BrkDoneThr[2:0] = 0		350		ms
$t_{EX_SL_PWM}$	Time needed to exit from sleep mode	SpdCtrlMd = 1 (PWM mode) $V_{SPEED} > V_{DIG_IH}$		2		µs
$t_{EX_SL_DR_PWM}$	Time taken to drive motor after exiting from sleep mode	SpdCtrlMd = 1 (PWM mode) $V_{SPEED} > V_{DIG_IH}$; ISDen = 0; BrkDoneThr[2:0] = 0		350		ms
$t_{EN_SL_ANA}$	Time needed to enter sleep mode	SpdCtrlMd = 0 (analog mode) $V_{SPEED} < V_{EN_SL}$; AvSIndEn = 0		6		ms
$t_{EN_SL_PWM}$	Time needed to enter sleep mode	SpdCtrlMd = 1 (PMW mode) $V_{SPEED} < V_{DIG_IL}$; AvSIndEn = 0		60		ms
$R_{PD_SPEED_SL}$	Internal SPEED pin pull down resistance to ground	V_{SPEED} = 0 (Sleep mode)	55			kΩ
DIGITAL I/O (DIR INPUT, FG OUTPUT)						
V_{DIR_H}	Input high		2.2			V
V_{DIR_L}	Input low				0.6	V
V_{FG_OH}	Output high voltage I_o = 5 mA			3.3		V
V_{FG_OL}	Output low voltage I_o = 5 mA				0.6	V
I^2C SERIAL INTERFACE						
V_{I2C_H}	Input high		2.2			V
V_{I2C_L}	Input low				0.6	V
f_{I2C}	I^2C clock frequency		0		400	kHz
LOCK DETECTION RELEASE TIME						
t_{LOCK_OFF}	Lock release time			5		s
t_{LCK_ETR}	Lock enter time			0.3		s
OVERCURRENT PROTECTION						
$I_{OC_limit_HS}$	HS overcurrent protection	V_{CC} < 28.5 V	3.5	4.25	5.5	A
$I_{OC_limit_LS}$	LS overcurrent protection	V_{CC} < 28.5 V	3.5	4.25	5.5	A
THERMAL SHUTDOWN						
T_{SDN}	Junction temperature shutdown threshold		150	165	180	°C
T_{SDN_HYS}	Junction temperature shutdown hysteresis		15	20	25	°C
T_{WARN}	Junction temperature warning threshold		115	125	140	°C

Copyright © 2023 Texas Instruments Incorporated

over operating voltage and ambient temperature range (unless otherwise noted)

PARAMETER		TEST CONDITIONS	MIN	TYP	MAX	UNIT
PHASE DRIVER						
SL_{PH_LH0}	Phase slew rate switching low to high	PHslew = 0; measure 20% to 80%; V_{CC} = 12 V	85	120	145	V/µs
SL_{PH_LH1}	Phase slew rate switching low to high	PHslew = 1; measure 20% to 80%; V_{CC} = 12 V	60	80	100	V/µs
SL_{PH_LH2}	Phase slew rate switching low to high	PHslew = 2; measure 20% to 80%; V_{CC} = 12 V	38	50	62	V/µs
SL_{PH_LH3}	Phase slew rate switching low to high	PHslew = 3; measure 20% to 80%; V_{CC} = 12 V	27	35	44	V/µs
SL_{PH_HL0}	Phase slew rate switching high to low	PHslew = 0; measure 80% to 20%; V_{CC} = 12 V	85	120	145	V/µs
SL_{PH_HL1}	Phase slew rate switching high to low	PHslew = 1; measure 80% to 20%; V_{CC} = 12 V	59	80	100	V/µs
SL_{PH_HL2}	Phase slew rate switching high to low	PHslew = 2; measure 80% to 20%; V_{CC} = 12 V	36	50	60	V/µs
SL_{PH_HL3}	Phase slew rate switching high to low	PHslew = 3; measure 80% to 20%; V_{CC} = 12 V	25	35	45	V/µs
BEMF COMPARATOR						
$BEMF_{HYS}$	BEMF comparator hysteresis	BEMF_HYS = 0	7	20	30	mV
		BEMF_HYS = 1	17	40	51	
LOAD DUMP PROTECTION						
V_{OV_R}	Load dump protection mode entry on rising V_{CC} threshold		28.5	29.2	30	V
V_{OV_F}	Load dump protection mode exit on falling V_{CC} threshold		27.7	28.2	28.8	V
V_{OV_HYS}	Load dump protection mode hysteresis		0.73	1	1.1	V

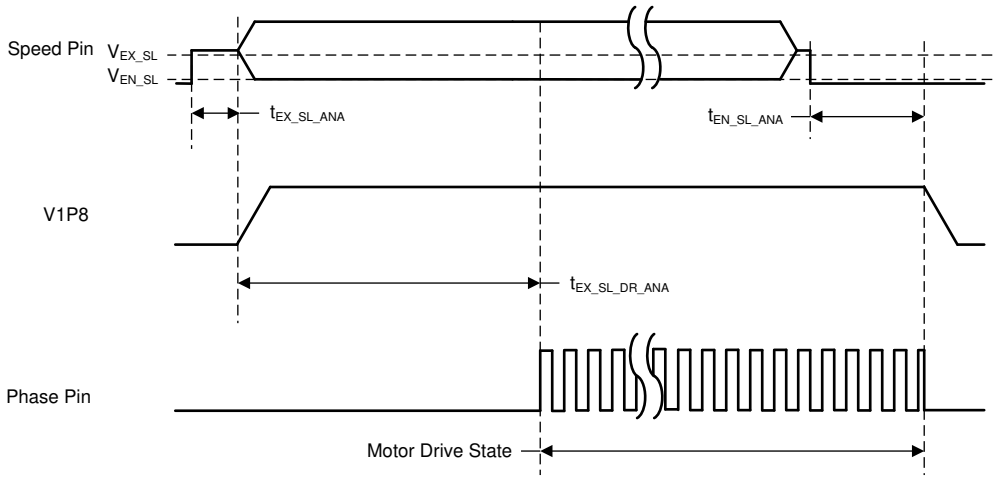

图 7-1. DRV10982Q Analog Mode Timing

Copyright © 2023 Texas Instruments Incorporated

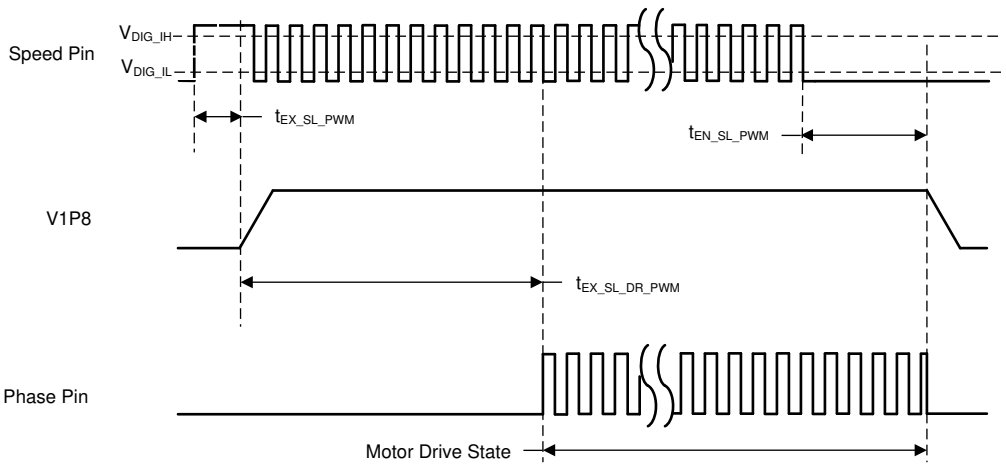

图 7-2. DRV10982Q PWM Mode Timing

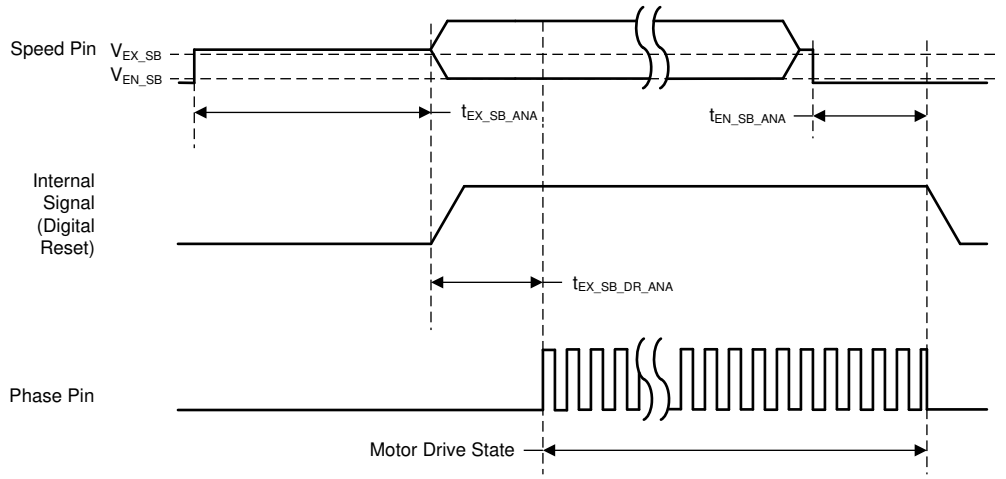

图 7-3. DRV10982SQ Analog Mode Timing

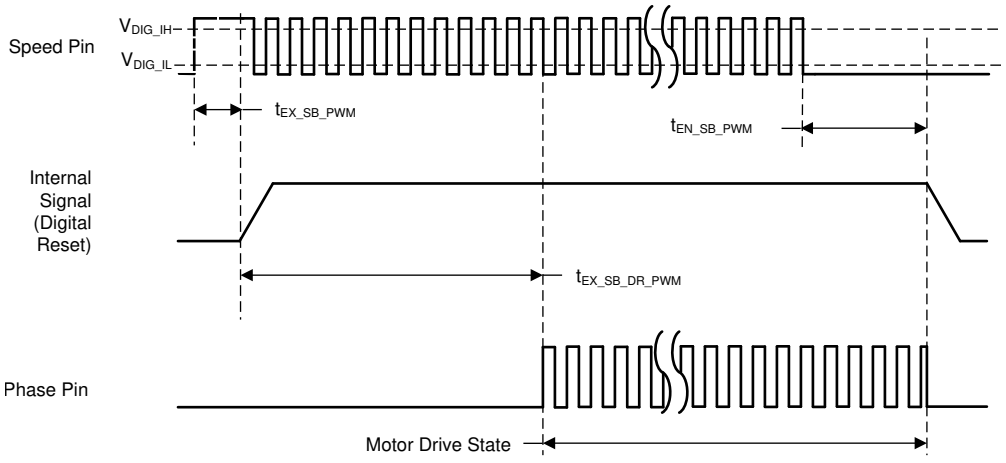

图 7-4. DRV10982SQ PWM Mode Timing

Copyright © 2023 Texas Instruments Incorporated

7.6 Typical Characteristics

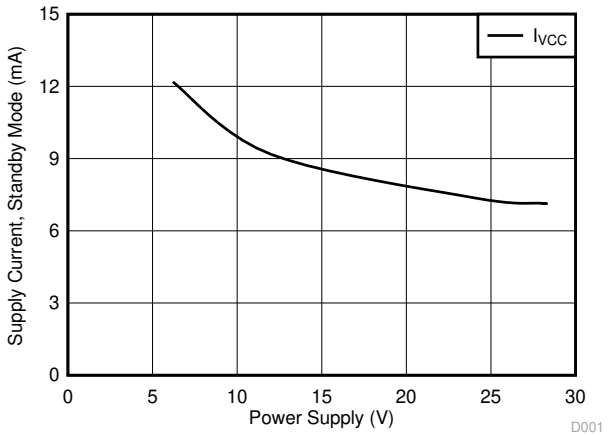

图 7-5. Supply Current vs Power Supply Voltage

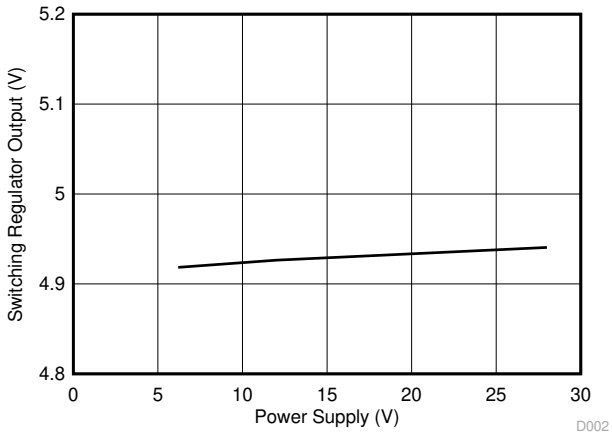

图 7-6. Step-Down Regulator Output vs Power Supply Voltage

Copyright © 2023 Texas Instruments Incorporated

8 Detailed Description

8.1 Overview

The DRV10982-Q1 device is a three-phase sensorless motor driver with integrated power MOSFETs that provides drive-current capability up to 2 A continuously. The device is specifically designed for low-noise, low-external-component-count motor-drive applications. The device is configurable through a simple I^2C interface to accommodate different motor parameters and spin-up profiles for different customer applications.

A 180° sensorless control scheme provides continuous sinusoidal output voltages to the motor phases to enable ultra-quiet motor operation by keeping the electrically induced torque ripple small.

The DRV10982-Q1 device features extensive protection and fault-detection mechanisms to ensure reliable operation. Voltage surge protection prevents the input V_{CC} capacitor from overcharging, which is typical during motor deceleration. The device provides overcurrent protection without the need for an external current-sense resistor. Rotor-lock detection is available through several methods. These methods can be configured with register settings to ensure reliable operation. The device provides additional protection for undervoltage lockout (UVLO) and for thermal shutdown.

The commutation control algorithm continuously measures the motor phase current and periodically measures the V_{CC} supply voltage. The device uses this information for BEMF estimation, and the information is also provided through the I^2C register interface for debug and diagnostic use in the system, if desired.

A buck step-down regulator efficiently steps down the supply voltage. The output of this regulator provides power for the internal circuits and can also be used to provide power for an external circuit such as a microcontroller. If providing power for an external circuit is not necessary (and to reduce system cost), configure the buck step-down regulator as a linear regulator by replacing the inductor with a resistor.

The DRV10982-Q1 device has a flexible interface, capable of supporting both analog and digital inputs. In addition to the I^2C interface, the device has FG, DIR, and SPEED pins. SPEED is the speed command input pin. DIR is the direction control input pin. FG is the speed indicator output, which shows the frequency of the motor commutation.

EEPROM is integrated in the DRV10982-Q1 device as memory for the motor parameter and operation settings. EEPROM data transfers to the registers after power-on and exit from sleep mode.

The DRV10982-Q1 device can also operate in register mode. If the system includes a microcontroller communicating through the I^2C interface, the device can dynamically update the motor parameters and operation settings by writing to the registers. In this configuration, the EEPROM data is bypassed by the register settings.

Copyright © 2023 Texas Instruments Incorporated

8.2 Functional Block Diagram

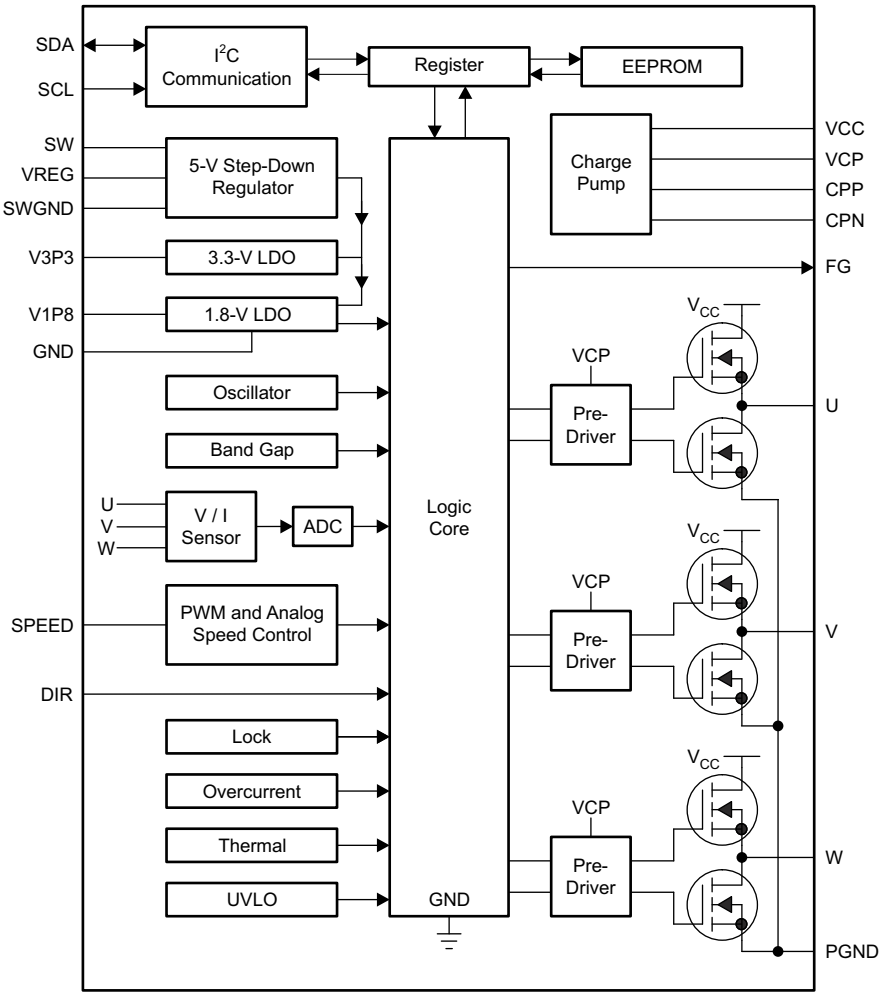

Copyright © 2017, Texas Instruments Incorporated

8.3 Feature Description

8.3.1 Regulators

8.3.1.1 Step-Down Regulator

The DRV10982-Q1 device includes a step-down hysteretic voltage regulator that can be operated as either a switching buck regulator using an external inductor or as a linear regulator using an external resistor. The best efficiency is achieved when the step-down regulator is in buck mode (see 图 8-1). The regulator output voltage is 5 V. When the regulated voltage drops by the hysteresis level, the high-side FET turns on to raise the regulated voltage back to the target of 5 V. The switching frequency of the hysteretic regulator is not constant and changes with load.

If the step-down regulator is configured in buck mode, see $I_{REG_MAX_L}$ in 节 7.5 to determine the amount of current provided for external load. If the step-down regulator is configured in linear mode, see $I_{REG_MAX_R}$ in 节 7.5 to determine the amount of current provided for external load. Active current I_{CC} is higher in buck mode compared to linear mode.

Copyright © 2023 Texas Instruments Incorporated

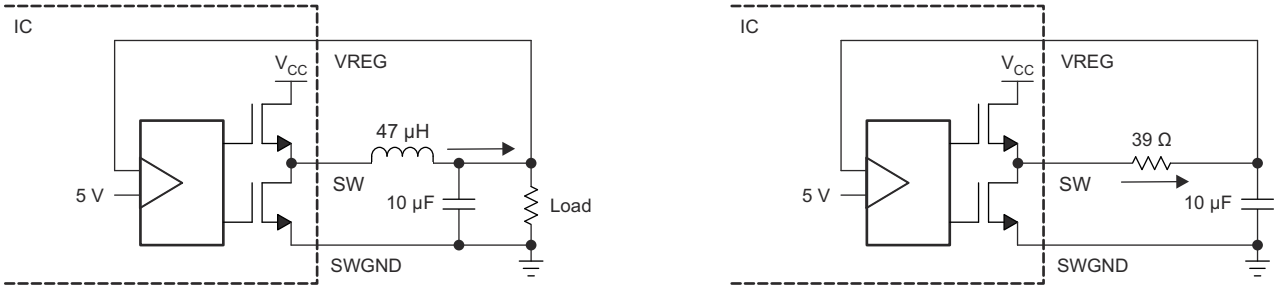

Buck Regulator with External Inductor

Buck Regulator with External Resistor

图 8-1. Step-Down Regulator Configurations

8.3.1.2 3.3-V and 1.8-V LDO

The DRV10982-Q1 device includes a 3.3-V LDO and a 1.8-V LDO. The 3.3-V LDO is powered by Vreg and 1.8-V LDO is powered by 3.3-V LDO. The 1.8-V LDO is for internal circuits only. The 3.3-V LDO is mainly for internal circuits, but can also drive external loads not to exceed I_{V3P3_MAX}. For example, it can work as a pullup voltage for the FG, DIR, SDA, and SCL interface.

Both the V1P8 and V3P3 capacitors must be connected to GND.

8.3.2 Protection Circuits

8.3.2.1 Thermal Shutdown

The DRV10982-Q1 device has a built-in thermal shutdown function, which shuts down the device when the junction temperature is more than T_{SDN}°C and recovers operating conditions when the junction temperature falls to T_{SDN} – T_{SDN_HYS}°C.

The OverTemp status bit (address 0x00, bit 15) is set during thermal shutdown. In addition to the thermal shutdown function there is a warning bit that is set whenever the device exceeds T_{WARN} and is indicated by the TempWarning bit of the FaultReg register (address 0x00, bit 14).

8.3.2.2 Undervoltage Lockout (UVLO)

The DRV10982-Q1 device has a built-in UVLO function block. The device is locked out when V_{CC} is below V_{UVLO_F} and is unlocked when V_{CC} is above V_{UVLO_R}. The hysteresis of the UVLO threshold is V_{UVLO_HYS}. In addition to the main supply, the step-down regulator, charge pump, and 3.3-V LDO all have undervoltage lockout monitors.

8.3.2.3 Overcurrent Protection

The overcurrent protection function acts to protect the device if the current, as measured from the FETs, exceeds the $I_{OC\text{-}limit}$ threshold. It protects the device in the event of a short-circuit condition on the motor phases. This includes phase shorts to GND, phase shorts to phase, or phase shorts to V_{CC}. The DRV10982-Q1 device places the output drivers into a high-impedance state until the lock time t_{LOCK_OFF} has expired. The OverCurr status bit of the FaultReg register (address 0x00, bit 11) is set.

The DRV10982-Q1 device also provides acceleration current-limit and lock-detection current-limit functions to protect the device and motor (see *节 8.4.7* and *节 8.4.8*).

Copyright © 2023 Texas Instruments Incorporated

8.3.2.4 Lock

When the motor is blocked or stopped by an external force, lock protection is triggered, and the device stops driving the motor immediately. After the lock release time t_{LOCK_OFF}, the DRV10982-Q1 device resumes driving the motor again. If the lock condition is still present, it enters the next lock protection cycle, and repeats until the lock condition is removed. With this lock protection, the motor and device do not overheat or become damaged due to the motor being locked (see 节 8.4.8).

During a lock condition the Status register indicates which of the locks has occurred.

8.3.3 Motor Speed Control

The DRV10982-Q1 device offers four methods for indirectly controlling the speed of the motor by adjusting the output voltage amplitude. This can be accomplished by varying the supply voltage (V_{CC}) or by controlling the speed command. The speed command can be controlled in one of three ways. The user can set the speed command by adjusting either the PWM input (PWM in) or the analog input (Analog) or by writing the speed command directly through the I^2C serial port (I^2C). The speed command is used to determine the PWM duty cycle output (PWM_DCO) (see 图 8-3).

The input PWM input (PWM in) can have a minimum duty cycle limit applied. DutyCycleLimit[1:0], accessible through the I^2C interface, allows the user to configure the minimum duty cycle behavior. This behavior is illustrated in 图 8-2.

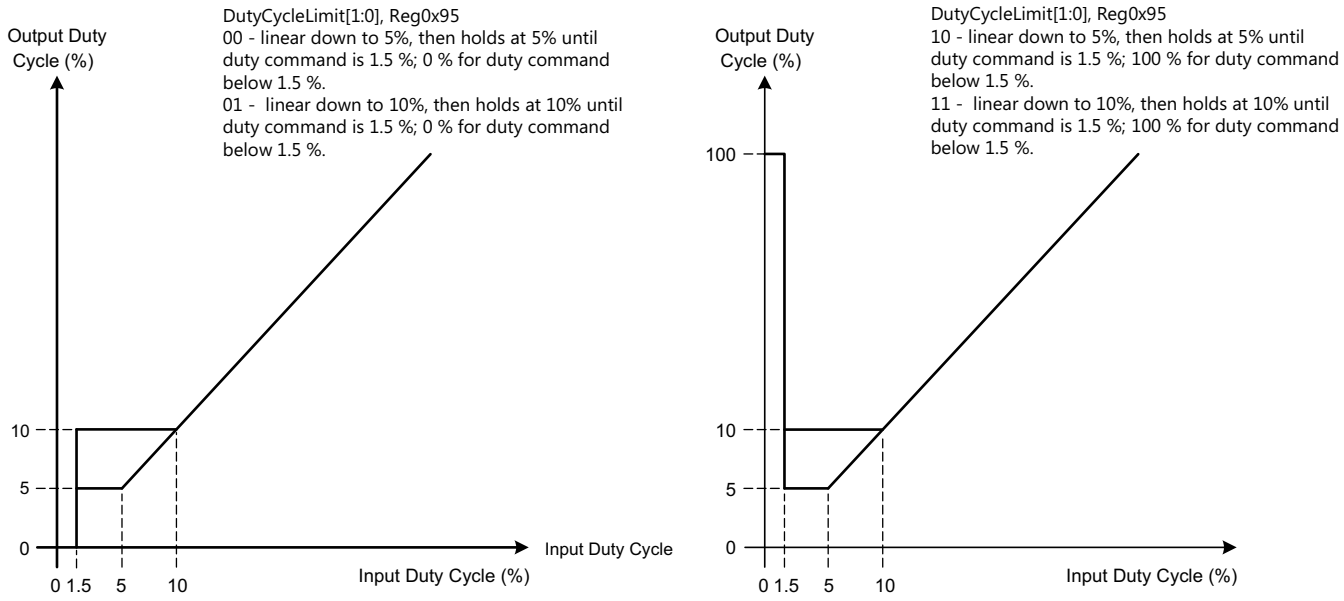

图 8-2. Duty Cycle Profile

The speed command may not always be equal to the PWM_DCO because the DRV10982-Q1 device has the AVS function (see 节 8.4.9), the acceleration current-limit function (see 节 8.4.7.1), and the closed-loop accelerate function (see 节 8.4.6.5) to optimize the control performance. These functions can limit the PWM_DCO, which affects the output amplitude (see 图 8-3).

Copyright © 2023 Texas Instruments Incorporated

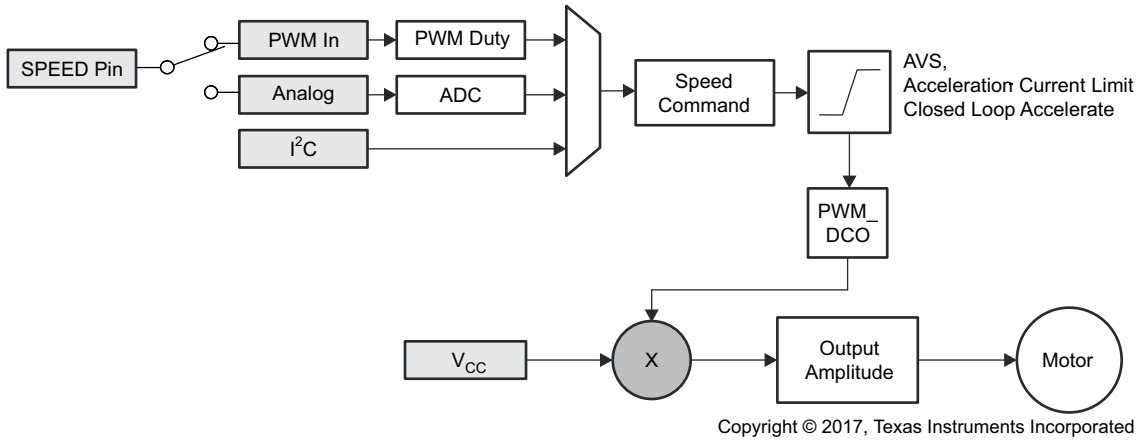

图 8-3. Multiplexing the Speed Command to the Output Amplitude Applied to the Motor

The output voltage amplitude applied to the motor is developed through sine wave modulation so that the phase-to-phase voltage is sinusoidal.

When any phase is measured with respect to ground, the waveform is sinusoidally coupled with third-order harmonics. This encoding technique permits one phase to be held at ground while the other two phases are pulse-width modulated. 图 8-4 and 图 8-5 show the sinusoidal encoding technique used in the DRV10982-Q1 device.

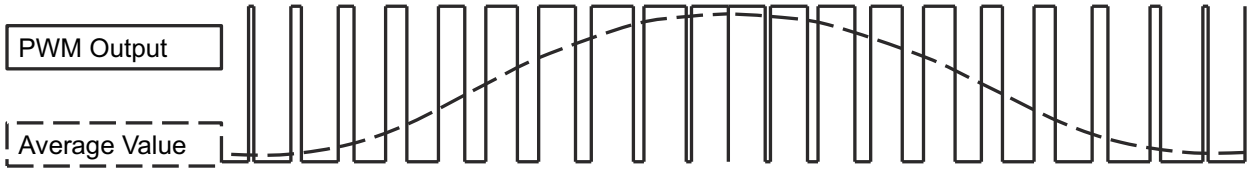

图 8-4. PWM Output and the Average Value

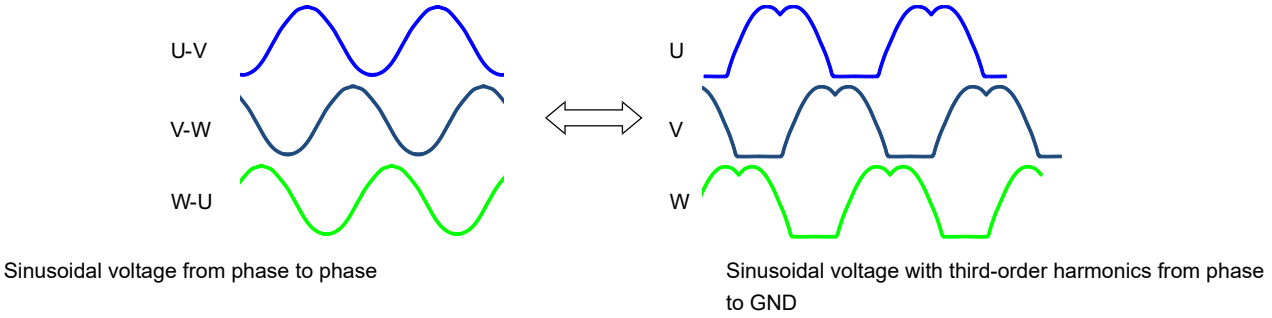

图 8-5. Representing Sinusoidal Voltages With Third-Order Harmonic Output

The output amplitude is determined by the magnitude of V_{CC} and the PWM duty cycle output (PWM_DCO). The PWM_DCO represents the peak duty cycle that is applied in one electrical cycle. The maximum amplitude is reached when PWM_DCO is at 100%. The peak output amplitude is V_{CC}. When the PWM_DCO is at 50%, the peak amplitude is V_{CC} / 2 (see 图 8-6).

Copyright © 2023 Texas Instruments Incorporated

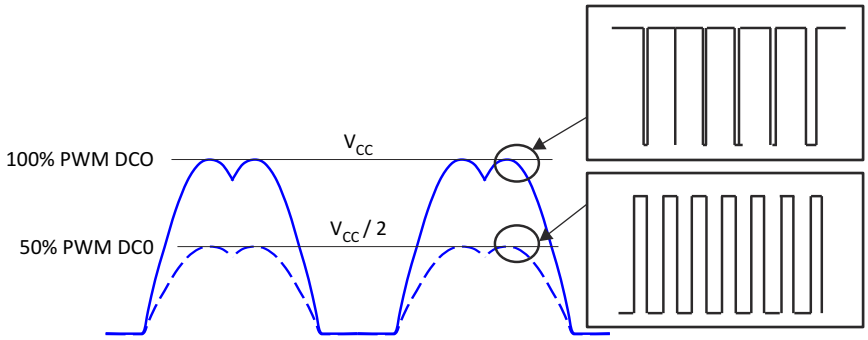

图 8-6. Output Voltage Amplitude Adjustment

Motor speed is controlled indirectly by controlling the output amplitude, which is achieved by either controlling V_{CC}, or controlling the PWM_DCO. The DRV10982-Q1 device provides different options for the user to control the PWM_DCO:

- Analog input (SPEED pin)
- PWM encoded digital input (SPEED pin)
- I^2C serial interface.

See the *节 8.4.6* section for more information.

8.3.4 Load Dump Handling

The recommended operation voltage of the DRV10982-Q1 device is from 6.2 V to 28 V. The device is able to drive the motor within this V_{CC} range.

In the load dump condition, V_{CC} can rise up to 45 V. Once the DRV10982-Q1 device detects that V_{CC} is higher than V_{OV_R} , it stops driving the motor and protects its own circuitry. When V_{CC} drops below V_{OV_F}, the DRV10982-Q1 device continues to operate the motor based on the user’s command.

8.3.5 Sleep or Standby Condition

The DRV10982-Q1 device is available in either a sleep mode (DRV10982Q) or standby mode version (DRV10982SQ). The DRV10982-Q1 device enters either sleep or standby to conserve energy. When the device enters either sleep or standby, the device stops driving the motor. The step-down regulator is disabled in the sleep mode version to conserve more energy. The I^2C interface is disabled and any register data not stored in EEPROM is reset for the sleep mode version. The step-down regulator remains active in the standby mode version. The register data is maintained, and the I^2C interface remains active for standby mode version.

For different speed command modes, 表 8-1 shows the timing and command to enter the sleep or standby condition.

表 8-1. Conditions to Enter or Exit Sleep or Standby Condition

SPEED COMMAND MODE	ENTER STANDBY CONDITION	ENTER SLEEP CONDITION	EXIT FROM STANDBY CONDITION	EXIT FROM SLEEP CONDITION
Analog	SPEED pin voltage < V_{EN_SB} for $t_{EN_SB_ANA}$	SPEED pin voltage < V_{EN_SL} for $t_{EN_SL_ANA}$	SPEED pin voltage > V_{EX_SB} for $t_{EX_SB_ANA}$	SPEED pin voltage > V_{EX_SL} for $t_{EX_SL_ANA}$
PWM	SPEED pin low (V < V_{DIG_IL}) for $t_{EN_SB_PWM}$	SPEED pin low (V < V_{DIG_IL}) for $t_{EN_SL_PWM}$	SPEED pin high (V > V_{DIG_IH}) for $t_{EX_SB_PWM}$	SPEED pin high (V > V_{DIG_IH}) for $t_{EX_SL_PWM}$
I^2C	SpdCtrl[8:0] is programmed as 0 for $t_{EN_SB_PWM}$	See 节 8.3.5.1	SpdCtrl[8:0] is programmed as non-zero for $t_{EX_SB_PWM}$	SPEED pin high (V > V_{DIG_IH}) for $t_{EX_SL_PWM}$ (PWM mode) or SPEED pin voltage > V_{EX_SL} for $t_{EX_SL_ANA}$ (Analog mode)

Speed pin in DRV10983SQ (Standby version) and DRV10983Q (sleep version) should be in known state (pulled high or low) when the speed is controlled via I^2C.

Copyright © 2023 Texas Instruments Incorporated

Note that when using the analog speed command, a higher voltage is required to exit from the sleep condition than from the standby condition. The I²C speed command cannot take the device out of the sleep condition because I²C communication is disabled during the sleep condition.

表 8-2. Minimum PWM Duty Cycle Requirement for Different PWM Frequency to Exit Sleep Condition

INPUT PWM FREQUENCY (kHz)	PWM DUTY CYCLE (%)
0.1 to 0.5	14
0.5 to 1	11
1 to 50	9
50 to 100	4
100	3.5

8.3.5.1 Required Sequence to Enter Sleep Mode

In I²C speed command mode, either of two sequence options can be used to enter sleep mode.

8.3.5.1.1 Option 1

1. Provide a non-zero value to the speed control register. For example, write 100 to register 0x30, speedCtrl[8:0].
2. Set the I²C OverRide bit to 1. That is, write 1 to register 0x30, speedCtrl[15].
3. In analog mode, be sure SPEED pin voltage is less than V_{EN_SL} for $t_{EN_SL_ANA}$. In PWM mode, make sure SPEED pin is low ($V < V_{DIG_IL}$) for $t_{EN_SL_PWM}$.
4. Provide the value of zero to the speed control register to enter sleep mode. That is, write 0 to register 0x30, speedCtrl[8:0].

8.3.5.1.2 Option 2

1. Set the motor disable bit to 1. That is, write 1 to register 0x60, EECtrl[15].
2. Set the I²C OverRide bit to 1. That is, write 1 to register 0x30, speedCtrl[15].
3. Set the motor disable bit to 0. That is, write 0 to register 0x60, EECtrl[15].
4. Provide the value of zero to the speed control register to enter sleep mode. That is, write 0 to register 0x30, speedCtrl[8:0].

8.3.6 EEPROM Access

The DRV10982-Q1 device has 112 bits (7 registers with 16-bit width) of EEPROM data, which are used to program the motor parameters as described in the 节 *8.5.1*.

The procedure for programming the EEPROM is as follows. TI recommends to perform the EEPROM programming without the motor spinning, cycle the power after the EEPROM write, and read back the EEPROM to verify the programming is successful.

1. Power up with any voltage within operating voltage range (6.2 V to 28 V)
2. (DRV10982Q only) Exit from sleep condition
3. Wait 10 ms
4. Write register 0x60 to set MTR_DIS = 1; this disables the motor driver.
5. Write register 0x31 with 0x0000 to clear the EEPROM access code
6. Write register 0x31 with 0xC0DE to enable access to EEPROM
7. Read register 0x32 for eeReadyStatus = 1
8. Case-A: Mass Write
   a. Write all individual shadow registers
      i. Write register 0x90 (CONFIG1) with CONFIG1 data
      ii. ...
      iii. Write register 0x96 (CONFIG7) with CONFIG7 data
   b. Write the following to register 0x35
      i. ShadowRegEn = 0
      ii. eeRefresh = 0

Copyright © 2023 Texas Instruments Incorporated

iii. eeWRnEn = 1
iv. EEPROM Access Mode = 10

c. Wait for register 0x32 eeReadyStatus = 1 – EEPROM is now updated with the contents of the shadow registers.

9. Case-B: Mass Read
   a. Write the following to register 0x35
      i. ShadowRegEn = 0
      ii. eeRefresh = 0
      iii. eeWRnEn = 0
      iv. eeAccMode = 10
   b. Internally, the device starts reading the EEPROM and storing it in the shadow registers.
   c. Wait for register 0x32 eeReadyStatus = 1 – shadow registers now contain the EEPROM values
10. Write register 0x60 to set MTR_DIS = 0; this re-enables the motor driver

Copyright © 2023 Texas Instruments Incorporated

8.4 Device Functional Modes

This section includes the logic required to be able to reliably start and drive the motor. It describes the processes used in the logic core and provides the information needed to configure the parameters effectively to work over a wide range of applications.

8.4.1 Motor Parameters

See the *DRV10983-Q1 Tuning Guide* for the motor parameter measurement.

The motor phase resistance and BEMF constants are two important parameters used to characterize a BLDC motor. The DRV10982-Q1 device requires these parameters to be configured in the register. The motor phase resistance is programmed by writing the values for Rm[6:0] (combination of RMShift[2:0] and RMValue[3:0]) in the Config1 register. The BEMF constant is programmed by writing the values for Kt[6:0] (combination of KTShift[2:0] and KTValue[3:0]) in the Config2 register.

8.4.1.1 Motor Phase Resistance

For a wye-connected motor, the motor phase resistance refers to the resistance from the phase output to the center tap, R_{PH_CT} (denoted as R_{PH_CT} in 图 8-7).

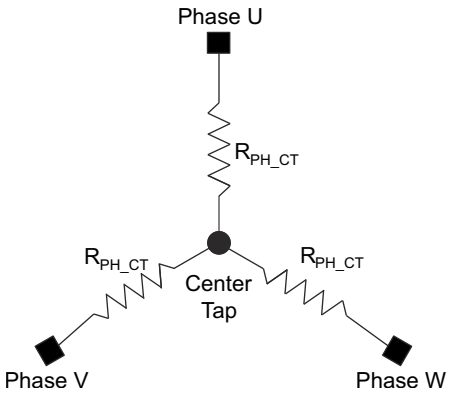

图 8-7. Wye-Connected Motor Phase Resistance

For a delta-connected motor, the motor phase resistance refers to the equivalent phase to center tap in the wye configuration. In 图 8-8, it is denoted as R_Y. $R_{PH_CT} = R_Y$.

For both the delta-connected motor and the wye-connected motor, the easy way to get the equivalent R_{PH_CT} is to measure the resistance between two phase terminals (R_{PH_PH}), and then divide this value by two, R_{PH_CT} = ½ R_{PH_PH}.

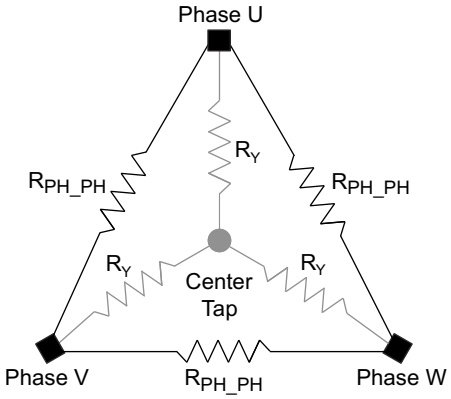

图 8-8. Delta-Connected Motor and the Equivalent Wye Connections

Copyright © 2023 Texas Instruments Incorporated

The motor phase resistance (R_{PH_CT}) must be converted to a 7-bit digital register value Rm[6:0] to program the motor phase resistance value. The digital register value can be determined as follows:

1. Convert the motor phase resistance (R_{PH_CT}) to a digital value where the LSB is weighted to represent 9.67 mΩ: Rmdig = R_{PH_CT} / 0.00967.
2. Encode the digital value such that Rmdig = RMValue[3:0] << RMShift[2:0].

The maximum resistor value, R_{PH_CT}, that can be programmed for the DRV10982-Q1 device is 18.5 Ω, which represents Rmdig = 1920 and an encoded Rm[6:0] value of 0x7Fh. The minimum resistor the DRV10982-Q1 device supports is 0.029 Ω, R_{PH_CT}, which represents Rmdig = 3.

For convenience, the encoded value for Rm[6:0] can also be obtained from 表 8-3.

表 8-3. Motor Phase Resistance Look-Up Table

RM[6:0] {RMShift[2:0], RMValue[3:0]}		R_{PH_CT} (Ω)	RM[6:0] {RMShift[2:0], RMValue[3:0]}		R_{PH_CT} (Ω)	RM[6:0] {RMShift[2:0], RMValue[3:0]}		R_{PH_CT} (Ω)
BINARY	HEX		BINARY	HEX		BINARY	HEX	
000 0000	0x00	0	0101000	0x28	0.3104	1011000	0x58	2.4832
000 0001	0x01	0.0097	010 1001	0x29	0.3492	101 1001	0x59	2.7936
000 0010	0x02	0.0194	010 1010	0x2A	0.388	101 1010	0x5A	3.104
000 0011	0x03	0.0291	010 1011	0x2B	0.4268	101 1011	0x5B	3.4144
000 0100	0x04	0.0388	010 1100	0x2C	0.4656	101 1100	0x5C	3.7248
000 0101	0x05	0.0485	010 1101	0x2D	0.5044	101 1101	0x5D	4.0352
000 0110	0x06	0.0582	010 1110	0x2E	0.5432	101 1110	0x5E	4.3456
000 0111	0x07	0.0679	010 1111	0x2F	0.582	101 1111	0x5F	4.656
000 1000	0x08	0.0776	011 1000	0x38	0.6208	110 1000	0x68	4.9664
000 1001	0x09	0.0873	011 1001	0x39	0.6984	110 1001	0x69	5.5872
000 1010	0x0A	0.097	011 1010	0x3A	0.776	110 1010	0x6A	6.208
000 1011	0x0B	0.1067	011 1011	0x3B	0.8536	110 1011	0x6B	6.8288
000 1100	0x0C	0.1164	011 1100	0x3C	0.9312	110 1100	0x6C	7.4496
000 1101	0x0D	0.1261	011 1101	0x3D	1.0088	110 1101	0x6D	8.0704
000 1110	0x0E	0.1358	011 1110	0x3E	1.0864	110 1110	0x6E	8.6912
000 1111	0x0F	0.1455	011 1111	0x3F	1.164	110 1111	0x6F	9.312
001 1000	0x18	0.1552	100 1000	0x48	1.2416	111 1000	0x78	9.9328
001 1001	0x19	0.1746	100 1001	0x49	1.3968	111 1001	0x79	11.1744
001 1010	0x1A	0.194	100 1010	0x4A	1.552	111 1010	0x7A	12.416
001 1011	0x1B	0.2134	100 1011	0x4B	1.7072	111 1011	0x7B	13.6576
001 1100	0x1C	0.2328	100 1100	0x4C	1.8624	111 1100	0x7C	14.8992
001 1101	0x1D	0.2522	100 1101	0x4D	2.0176	111 1101	0x7D	16.1408
001 1110	0x1E	0.2716	100 1110	0x4E	2.1728	111 1110	0x7E	17.3824
001 1111	0x1F	0.291	100 1111	0x4F	2.328	111 1111	0x7F	18.624

Copyright © 2023 Texas Instruments Incorporated

8.4.1.2 BEMF Constant

The BEMF constant, Kt[6:0] describes the phase-to-phase BEMF voltage of the motor as a function of the motor velocity.

图 8-9 shows the measurement technique for this constant as used in the DRV10982-Q1 device.

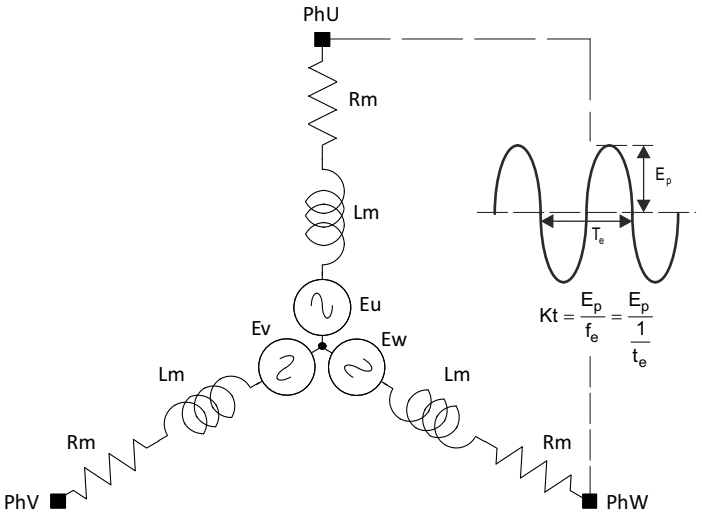

图 8-9. Kt_{PH} Definition

With the motor coasting, use an oscilloscope to capture the differential voltage waveform between any two phases. Derive the BEMF constant used by the DRV10982-Q1 device as shown in 方程式 1.

$$Kt_{PH} = E_p \times t_e \quad (1)$$

where

- E_p is ½ the peak-to-peak amplitude of the measured voltage
- t_e is the electrical period

The measured BEMF constant (Kt_{PH}) must be converted to a 7-bit digital register value Kt[6:0] (combination of KtShift[2:0] and KtValue[3:0]) to program the BEMF constant value. The digital register value can be determined as follows:

1. Convert the measured Kt_{PH} to a weighted digital value: $Kt_{ph_dig} = 1090 \times Kt_{PH}$
2. Encode the digital value such that Kt_{ph_dig} = KtValue[3:0] << KtShift[2:0].

The maximum Kt_{PH} that can be programmed is 1760 mV/Hz. This represents a digital value of 1920 and an encoded Kt[6:0] value of 0x7Fh. The minimum Kt_{PH} that can be programmed is 0.92 mV/Hz, which represents a digital value of 1 and an encoded Kt[6:0] value of 0x01h.

For convenience, the encoded value of Kt[6:0] may also be obtained from 表 8-4.

Copyright © 2023 Texas Instruments Incorporated

表 8-4. BEMF Constant Look-Up Table

Kt[6:0] {KtShift[2:0], KtValue[3:0]}		Kt_{PH} (mV/Hz)	Kt [6:0] {KtShift[2:0], KtValue[3:0]}		Kt_{PH} (mV/Hz)	Kt [6:0] {KtShift[2:0], KtValue[3:0]}		Kt_{PH} (mV/Hz)
BINARY	HEX		BINARY	HEX		BINARY	HEX	
000 0000	0x00	0	010 1000	0x28	29.44	101 1000	0x58	235.52
000 0001	0x01	0.92	010 1001	0x29	33.12	101 1001	0x59	264.96
000 0010	0x02	1.84	010 1010	0x2A	36.8	101 1010	0x5A	294.4
000 0011	0x03	2.76	010 1011	0x2B	40.48	101 1011	0x5B	323.84
000 0100	0x04	3.68	010 1100	0x2C	44.16	101 1100	0x5C	353.28
000 0101	0x05	4.6	010 1101	0x2D	47.84	101 1101	0x5D	382.72
000 0110	0x06	5.52	010 1110	0x2E	51.52	101 1110	0x5E	412.16
000 0111	0x07	6.44	010 1111	0x2F	55.2	101 1111	0x5F	441.6
000 1000	0x08	7.36	011 1000	0x38	58.88	110 1000	0x68	471.04
000 1001	0x09	8.28	011 1001	0x39	66.24	110 1001	0x69	529.92
000 1010	0x0A	9.2	011 1010	0x3A	73.6	110 1010	0x6A	588.8
000 1011	0x0B	10.12	011 1011	0x3B	80.96	110 1011	0x6B	647.68
000 1100	0x0C	11.04	011 1100	0x3C	88.32	110 1100	0x6C	706.56
000 1101	0x0D	11.96	011 1101	0x3D	95.68	110 1101	0x6D	765.44
000 1110	0x0E	12.88	011 1110	0x3E	103.04	110 1110	0x6E	824.32
000 1111	0x0F	13.8	011 1111	0x3F	110.4	110 1111	0x6F	883.2
001 1000	0x18	14.72	100 1000	0x48	117.76	111 1000	0x78	942.08
001 1001	0x19	16.56	100 1001	0x49	132.48	111 1001	0x79	1059.84
001 1010	0x1A	18.4	100 1010	0x4A	147.2	111 1010	0x7A	1177.6
001 1011	0x1B	20.24	100 1011	0x4B	161.92	111 1011	0x7B	1295.36
001 1100	0x1C	22.08	100 1100	0x4C	176.64	111 1100	0x7C	1413.12
001 1101	0x1D	23.92	100 1101	0x4D	191.36	111 1101	0x7D	1530.88
001 1110	0x1E	25.76	100 1110	0x4E	206.08	111 1110	0x7E	1648.64
001 1111	0x1F	27.6	100 1111	0x4F	220.8	111 1111	0x7F	1766.4

8.4.2 Starting the Motor Under Different Initial Conditions

The motor can be in one of three states when the DRV10982-Q1 device attempts to begin the start-up process. The motor may be stationary, or spinning in the forward or reverse directions. The DRV10982-Q1 device includes a number of features to allow for reliable motor start under all of these conditions. 图 8-10 shows the motor start-up flow for each of the three initial motor states.

8.4.2.1 Case 1 – Motor is Stationary

If the motor is stationary, the commutation logic must be initialized to be in phase with the position of the motor. The DRV10982-Q1 device provides for two options to initialize the commutation logic to the motor position. Initial position detect (IPD) determines the position of the motor based on the deterministic inductance variation, which is often present in BLDC motors. The *align-and-go* technique forces the motor into alignment by applying a voltage across a particular motor phase to force the motor to rotate in alignment with this phase.

8.4.2.2 Case 2 – Motor is Spinning in the Forward Direction

If the motor is spinning forward with enough velocity, the DRV10982-Q1 device may be configured to go directly into closed loop. By resynchronizing to the spinning motor, the user achieves the fastest possible start-up time for this initial condition.

8.4.2.3 Case 3 – Motor is Spinning in the Reverse Direction

If the motor is spinning in the reverse direction, the DRV10982-Q1 device provides several methods to convert it back to the forward direction.

Copyright © 2023 Texas Instruments Incorporated

One method, reverse drive, allows the motor to be driven so that it accelerates through zero velocity. The motor achieves the shortest possible spin-up time in systems where the motor is spinning in the reverse direction.

If this feature is not selected, then the DRV10982-Q1 device may be configured either to wait for the motor to stop spinning or to brake the motor. After the motor has stopped spinning, the motor start-up sequence proceeds as it would for a motor which is stationary.

Take care when using the reverse-drive or brake feature to ensure that the current is limited to an acceptable level and that the supply voltage does not surge as a result of energy being returned to the power supply.

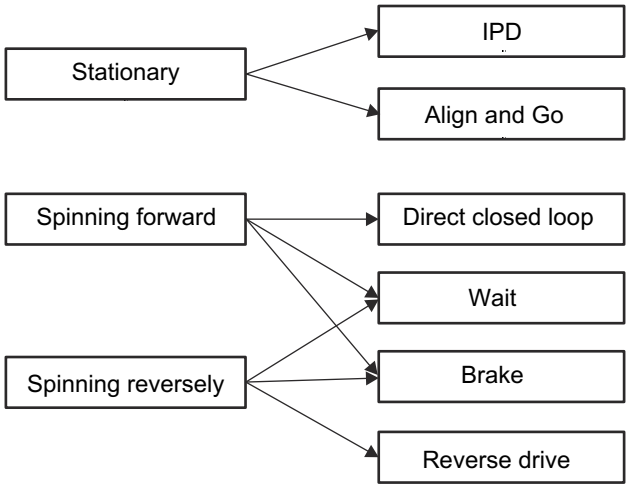

图 8-10. Start the Motor Under Different Initial Conditions

Copyright © 2023 Texas Instruments Incorporated

8.4.3 Motor Start Sequence

图 8-11 shows the motor-start sequence implemented in the DRV10982-Q1 device.

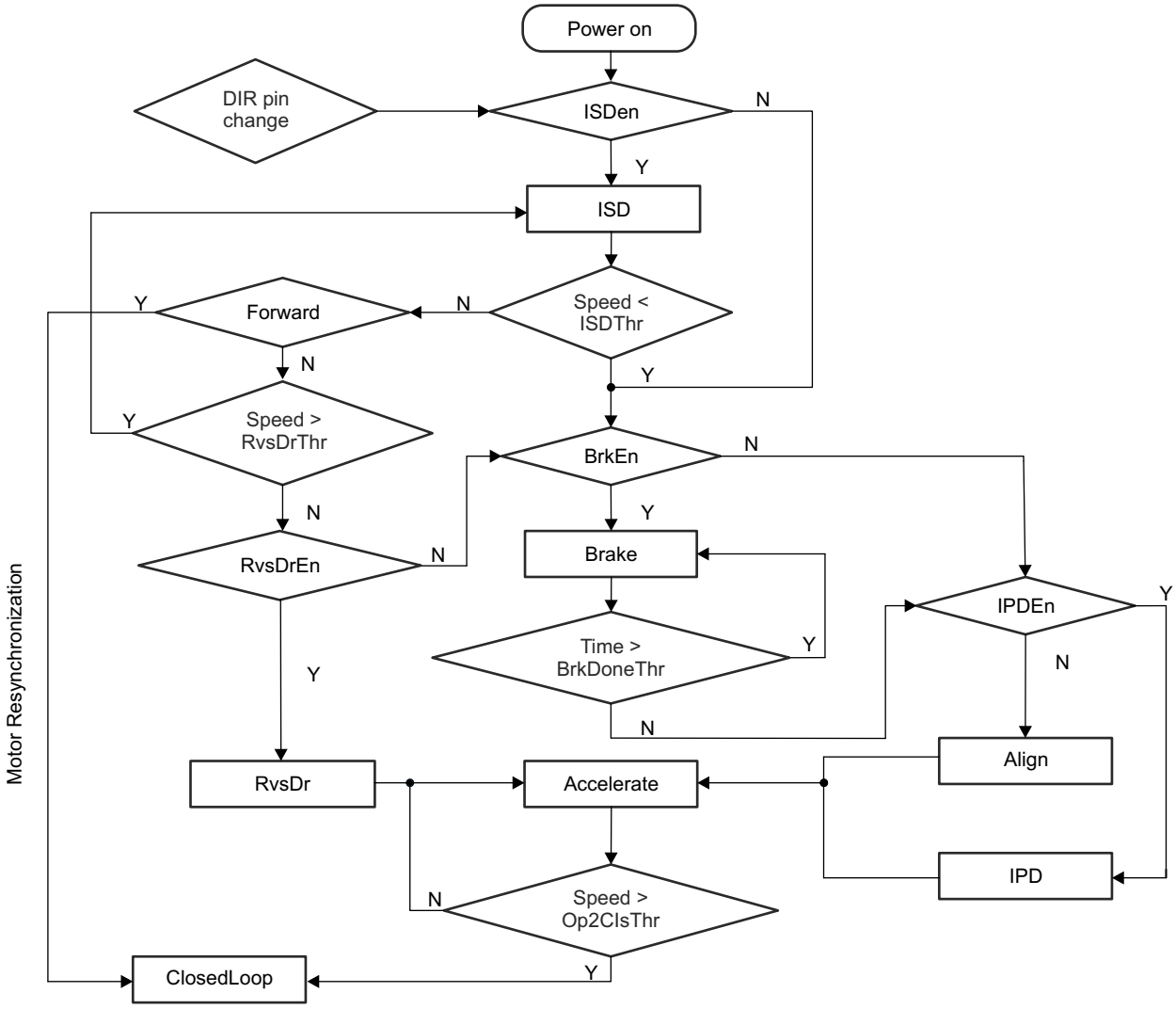

图 8-11. Motor Starting-Up Flow

Power-On State This is the initial power-on state of the motor start sequencer (MSS). The MSS starts in this state on initial power-up or whenever the DRV10982-Q1 device comes out of either standby or sleep mode.

ISDen Judgment After power-on, the DRV10982-Q1 MSS enters the ISDen judgment where it checks to see if the initial speed detect (ISD) function is enabled (ISDen = 1). If ISD is disabled, the MSS proceeds directly to the BrkEn Judgment. If ISD is enabled, the motor start sequence advances to the ISD state.

ISD State The MSS determines the initial condition of the motor (see *节 8.4.3.1*).

Speed<ISDThr Judgment If the motor speed is lower than the threshold defined by ISDThr[1:0], then the motor is considered to be stationary and the MSS proceeds to the BrkEn judgment. If the speed is greater than the threshold defined by ISDThr[1:0], the start sequence proceeds to the Forward judgment.

Forward Judgment The MSS determines whether the motor is spinning in the forward or the reverse direction. If the motor is spinning in the forward direction, the DRV10982-Q1 device

Copyright © 2023 Texas Instruments Incorporated

	executes the resynchronization (see 节 8.4.3.2) process by transitioning directly into the ClosedLoop state. If the motor is spinning in the reverse direction, the MSS proceeds to the Speed>RvsDrThr.
Speed>RvsDrThr Judgment	The motor start sequencer checks to see if the reverse speed is greater than the threshold defined by RvsDrThr[1:0]. If it is, then the MSS returns to the ISD state to allow the motor to decelerate. This prevents the DRV10982-Q1 device from attempting to reverse drive or brake a motor that is spinning too quickly. If the reverse speed of the motor is less than the threshold defined by RvsDrThr[1:0], then the MSS advances to the RvsDrEn judgment.
RvsDrEn Judgment	The MSS checks to see if the reverse drive function is enabled (RvsDrEn = 1). If it is, the MSS transitions into the RvsDr state. If the reverse drive function is not enabled, the MSS advances to the BrkEn judgment.
RvsDr State	The DRV10982-Q1 device drives the motor in the forward direction to force it to rapidly decelerate (see 节 8.4.3.3). When it reaches zero velocity, the MSS transitions to the Accelerate state.
BrkEn Judgment	The MSS checks to determine whether the brake function is enabled (BrkDoneThr[2:0] ≠ 000). If the brake function is enabled, the MSS advances to the brake state.
Brake State	The device performs the brake function (see 节 8.4.3.4).
Time>BrkDoneThr Judgment	The MSS applies brake for a time configured by BRKDoneThr[2:0]. After brake state, the MSS advances to the IPDEn judgment.
IPDEn Judgment	The MSS checks to see if IPD has been enabled (IPDCurrThr[3:0] ≠ 0000). If the IPD is enabled, the MSS transitions to the IPD state. Otherwise, it transitions to the align state.
Align State	The DRV10982-Q1 device performs the align function (see 节 8.4.3.5.1). After the align completes, the MSS transitions to the Accelerate state.
IPD State	The DRV10982-Q1 device performs the IPD function. The IPD function is described in 节 8.4.3.5.2. After the IPD completes, the MSS transitions to the accelerate state.
Accelerate State	The DRV10982-Q1 device accelerates the motor according to the settings of StAccel and StAccel2. After applying the accelerate settings, the MSS advances to the Speed>Op2ClsThr judgment.
Speed>Op2ClsThr Judgment	The motor accelerates until the drive rate exceeds the threshold configured by the Op2ClsThr[4:0] settings. When this threshold is reached, the DRV10982-Q1 device enters into the ClosedLoop state.
ClosedLoop State	In this state, the DRV10982-Q1 device drives the motor based on feedback from the commutation control algorithm.
DIR Pin Change Judgment	If the DIR pin is changed during any of above states, DRV10982-Q1 device stops driving the motor and restarts from the beginning.

8.4.3.1 Initial Speed Detect

The ISD function is used to identify the initial condition of the motor. If the function is disabled, the DRV10982-Q1 device does not perform the initial speed detect function and treats the motor as if it is stationary.

Phase-to-phase comparators are used to detect the zero crossings of the motor’s BEMF voltage while it is coasting (motor phase outputs are in the high-impedance state). 图 8-12 shows the configuration of the comparators.

Copyright © 2023 Texas Instruments Incorporated

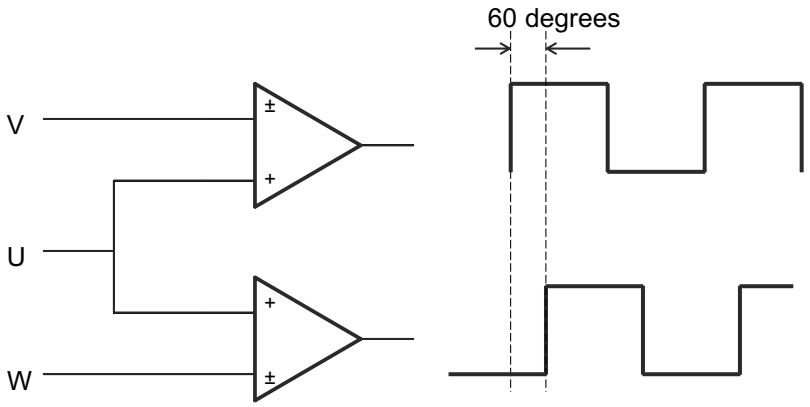

图 8-12. Initial Speed Detect Function

If the UW comparator output is lagging the UV comparator by 60°, the motor is spinning forward. If the UW comparator output is leading the UV comparator by 60°, the motor is spinning in reverse.

The motor speed is determined by measuring the time between two rising edges of either of the comparators.

If neither of the comparator outputs toggles for a given amount of time, the condition is defined as stationary. The amount of time can be programmed by setting the register bits ISDThr[1:0].

8.4.3.2 Motor Resynchronization

The resynchronize function works when the ISD function is enabled and determines that the initial state of the motor is spinning in the forward direction. The speed and position information measured during ISD are used to initialize the drive state of the DRV10982-Q1 device, which can transition directly into the closed-loop running state without needing to stop the motor.

8.4.3.3 Reverse Drive

The ISD function measures the initial speed and the initial position; the DRV10982-Q1 reverse drive function acts to reverse accelerate the motor through zero speed and to continue accelerating until the closed loop threshold is reached (see 图 8-13). If the reverse speed is greater than the threshold configured in RvsDrThr[1:0], then the DRV10982-Q1 device waits until the motor coasts to a speed that is less than the threshold before driving the motor to reverse accelerate.

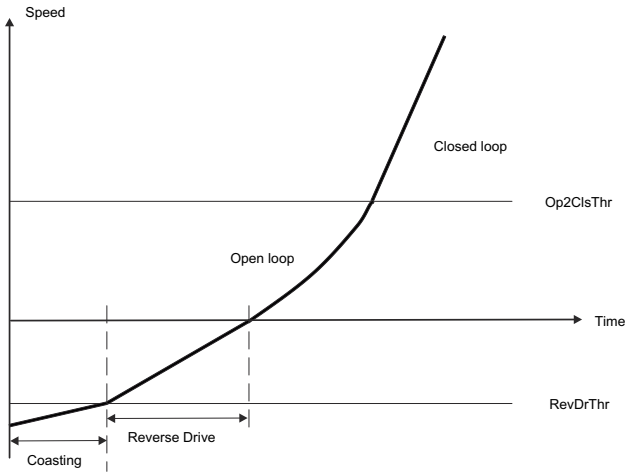

图 8-13. Reverse Drive Function

Reverse drive is suitable for applications where the load condition is light at low speed and relatively constant and where the reverse speed is low (that is, a fan motor with little friction). For other load conditions, the motor

Copyright © 2023 Texas Instruments Incorporated

brake function provides a method for helping force a motor which is spinning in the reverse direction to stop spinning before a normal start-up sequence.

8.4.3.4 Motor Brake

The motor brake function can be used to stop the spinning motor before attempting to start the motor. The brake is applied by turning on all three of the low-side driver FETs.

Brake is enabled by configuring a non-zero BrkDoneThr[2:0]. Brake is applied for a time configured by BrkDoneThr[2:0] (forward or reverse). After the motor is stopped, the motor position is unknown. To proceed with restarting in the correct direction, the IPD or align-and-go algorithm must be implemented. The motor start sequence is the same as it would be for a motor starting in the stationary condition.

The motor brake function can be disabled. The motor skips the brake state and attempts to spin the motor as if it were stationary. If this happens while the motor is spinning in either direction, the start-up sequence may not be successful.

8.4.3.5 Motor Initialization

8.4.3.5.1 Align

The DRV10982-Q1 device aligns a motor by injecting dc current through a particular phase pattern which is current flowing into phase V, flowing out from phase W for a certain time (configured by AlignTime[2:0]). The current magnitude is determined by OpenLCurr[1:0]. The motor should be aligned at the known position.

The time of align affects the start-up timing (see *节 8.4.3.6*). A bigger-inertia motor requires longer align time.

8.4.3.5.2 Initial Position Detect (IPD)

The inductive sense method is used to determine the initial position of the motor when IPD is enabled. IPD is enabled by selecting IPDCurrThr[3:0] to any value other than 0000.

IPD can be used in applications where reverse rotation of the motor is unacceptable. Because IPD is not required to wait for the motor to align with the commutation, it can allow for a faster motor start sequence. IPD works well when the inductance of the motor varies as a function of position. Because it works by pulsing current to the motor, it can generate acoustics which must be taken into account when determining the best start method for a particular application.

8.4.3.5.2.1 IPD Operation

The IPD operates by sequentially applying voltage across two of the three motor phases according to the following sequence: VW WV UV VU WU UW (see 图 8-14). When the current reaches the threshold configured in IPDCurrThr[3:0], the voltage across the motor is stopped. The DRV10982-Q1 device measures the time it takes from when the voltage is applied until the current threshold is reached. The time varies as a function of the inductance in the motor windings. The state with the shortest time represents the state with the minimum inductance. The minimum inductance is because of the alignment of the north pole of the motor with this particular driving state.

Copyright © 2023 Texas Instruments Incorporated

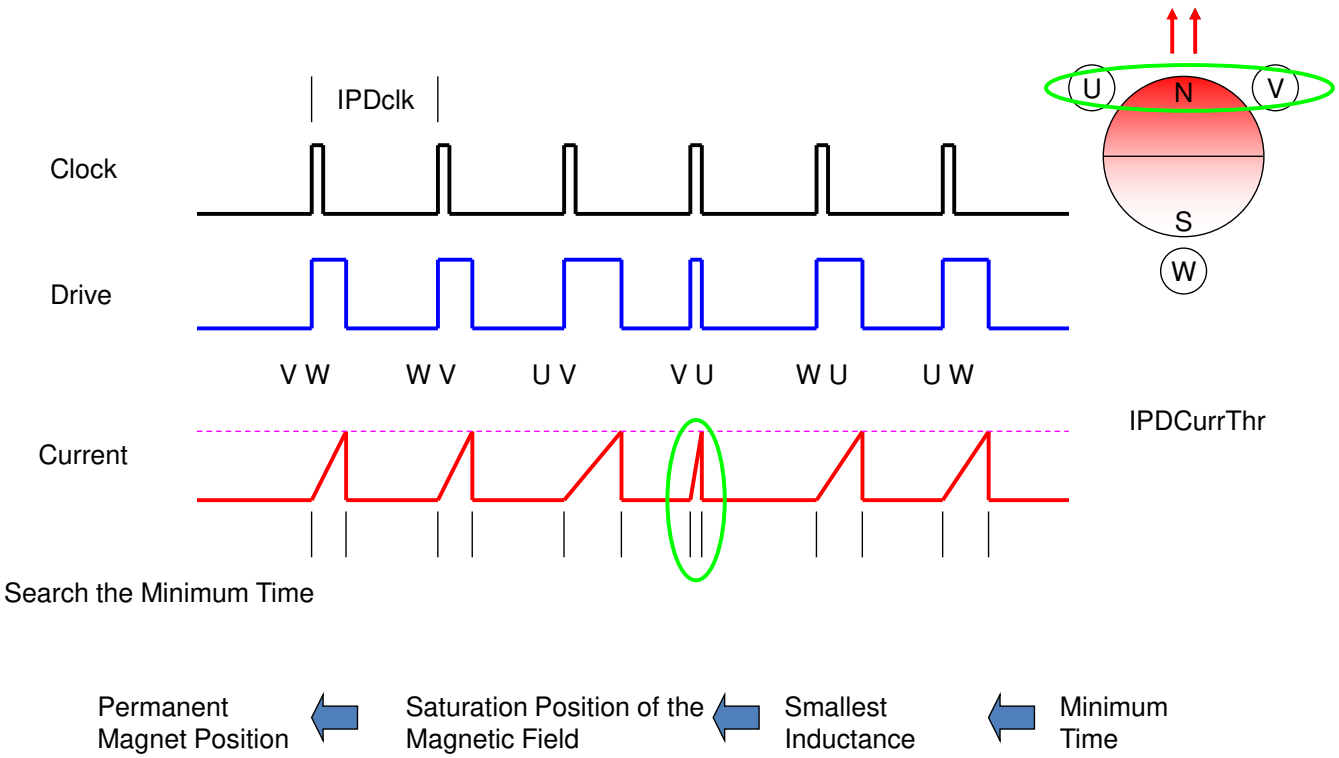

图 8-14. IPD Function

8.4.3.5.2.2 IPD Release Mode

Two options are available for stopping the voltage applied to the motor when the current threshold is reached. If IPDRlsMd = 0, the recirculate mode is selected. The low-side (S6) MOSFET remains on to allow the current to recirculate between the MOSFET (S6) and body diode (S2) (see 图 8-15). If IPDRlsMd = 1, the high-impedance (Hi-Z) mode is selected. Both the high-side (S1) and low-side (S6) MOSFETs are turned off and the current flies back across the body diodes into the power supply (see 图 8-16).

In the high-impedance state, the phase current has a faster settle-down time, but that could result in a surge on V_{CC}. Manage this with appropriate selection of either a clamp circuit or by providing sufficient capacitance between V_{CC} and GND. If the voltage surge cannot be contained and if it is unacceptable for the application, then select the recirculate mode. When selecting the recirculate mode, select the IPDClk[1:0] bits to give the current in the motor windings enough time to decay to 0.

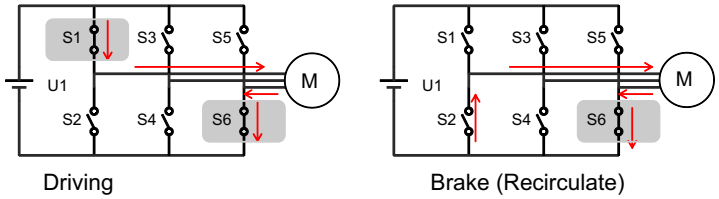

图 8-15. IPD Release Mode 0

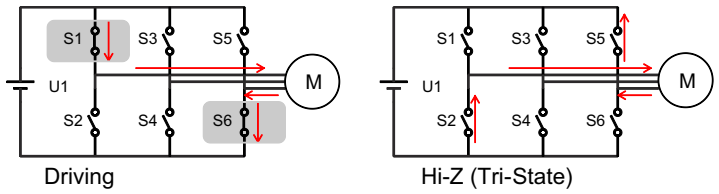

图 8-16. IPD Release Mode 1

Copyright © 2023 Texas Instruments Incorporated

8.4.3.5.2.3 IPD Advance Angle

After the initial position is detected, the DRV10982-Q1 device begins driving the motor at an angle specified by IPDAdvcAgl[1:0].

Advancing the drive angle anywhere from 0° to 180° results in positive torque. Advancing the drive angle by 90° results in maximum initial torque. Applying maximum initial torque could result in uneven acceleration to the rotor. Select the IPDAdvcAgl[1:0] to allow for smooth acceleration in the application (see 图 8-17).

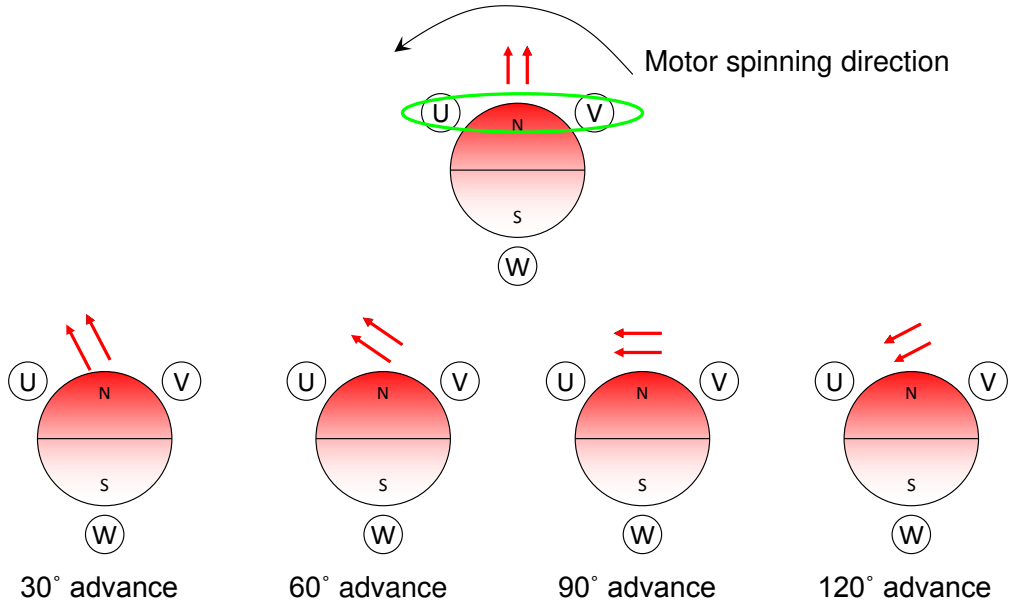

图 8-17. IPD Advance Angle

8.4.3.5.3 Motor Start

After it is determined that the motor is stationary and after completing the motor initialization with either align or IPD, the DRV10982-Q1 device begins to accelerate the motor. This acceleration is accomplished by applying a voltage determined by the open-loop current setting (OpenLCurr[1:0]) to the appropriate drive state and by increasing the rate of commutation without regard to the real position of the motor (referred to as open-loop operation). The function of the open-loop operation is to drive the motor to a minimum speed so that the motor generates sufficient BEMF to allow the commutation control logic to accurately drive the motor.

表 8-5 lists the configuration options that can be set in register to optimize the initial motor acceleration stage for different applications.

Copyright © 2023 Texas Instruments Incorporated

表 8-5. Configuration Options for Controlling Open-Loop Motor Start

DESCRIPTION	REG. NAME	CONFIGURATION BITS	MIN. VALUE	MAX. VALUE
Open- to closed-loop threshold	CONFIG4	Op2ClsThr[4:0]	0.8 Hz	204.8 Hz
Align time	CONFIG4	AlignTime[2:0]	40 ms	5.3 s
First-order accelerate	CONFIG4	StAccel[2:0]	0.019 Hz/s	76 Hz/s
Second-order accelerate	CONFIG4	StAccel2[2:0]	0.0026 Hz/s^2	57 Hz/s^2
Open-loop current setting	CONFIG3	OpenLCurr[1:0]	200 mA	1.6 A
Align current setting			150 mA	1.2 A
Open-loop current ramping	CONFIG3	OpLCurrRt[2:0]	0.023 V_{CC}/s	6 V_{CC}/s

8.4.3.6 Start-Up Timing

Start-up timing is determined by the align and accelerate time. The align time can be set by AlignTime[2:0]. The accelerate time is defined by the open-to-closed loop threshold Op2ClsThr[4:0] along with the first-order StAccel[2:0](A1) and second-order StAccel2[2:0](A2) acceleration coefficients. 图 8-18 shows the motor start-up process.

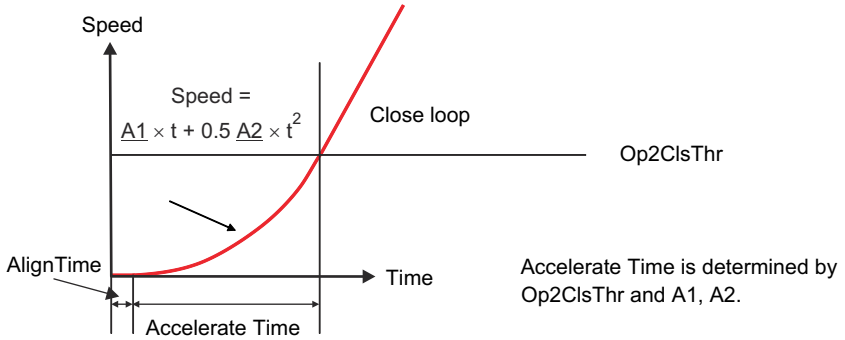

图 8-18. Motor Start-Up Process

Select the first-order and second-order acceleration coefficients to allow the motor to reliably accelerate from zero velocity up to the closed-loop threshold in the shortest time possible. Using a slow acceleration coefficient during the first order accelerate stage can help improve reliability in applications where it is difficult to accurately initialize the motor with either align or IPD.

Select the open-to-closed loop threshold to allow the motor to accelerate to a speed that generates sufficient BEMF for closed-loop control. This is determined by the velocity constant of the motor based on the relationship described in 方程式 2.

$$\text{BEMF} = Kt_{PH} \times \text{speed (Hz)} \tag{2}$$

8.4.4 Align Current

During the align state, the measured align current is dependent on actual motor phase resistance and $r_{DS(on)}$ of the internal FETs. The relationship between measured align current and configured align current is derived from actual motor phase resistance, configured motor phase resistance and $r_{DS(on)}$.

$$\text{AlignCurrent_Measured} = \text{AlignCurrent_Configured} \times \left[\frac{R_m}{R_{motor} + r_{DS(on)}} \right] \tag{3}$$

where

- AlignCurrent_Measured is the actual align current measured during the align state
- AlignCurrent_Configured is the align current configured by OpenLCurr[1:0]

Copyright © 2023 Texas Instruments Incorporated

- R_{motor} is the actual motor phase resistance
- $r_{DS(on)}$ is the resistance between the drain and source of the FETs during the on-state
- R_m is configured by Rm[6:0]

8.4.5 Start-Up Current Setting

The start-up current setting is to control the peak start-up during open loop. During open-loop operation, it is desirable to control the magnitude of drive current applied to the motor. This is helpful in controlling and optimizing the rate of acceleration. The limit takes effect during reverse drive, align, and acceleration.

The start current is set by programming the OpenLCurr[1:0] bits. The current should be selected to allow the motor to reliably accelerate to the handoff threshold. Heavier loads may require a higher current setting, but it should be noted that the rate of acceleration is limited by the acceleration rate (StAccel[2:0], StAccel2[2:0]). If the motor is started with more current than necessary to reliably reach the handoff threshold, it results in higher power consumption.

The start current is controlled based on the relationship shown in 方程式 4 and 图 8-19. The duty cycle applied to the motor is derived from the calculated value for U_{Limit} and the magnitude of the supply voltage, V_{CC}, as well as the drive state of the motor.

$$U_{Limit} = I_{Limit} \times Rm + Speed\,(Hz) \times Kt \tag{4}$$

where

- I_{Limit} is configured by OpenLCurr[1:0]
- Rm is configured by Rm[6:0]
- Speed is variable based motor’s open loop acceleration profile
- Kt is configured by Kt[6:0]

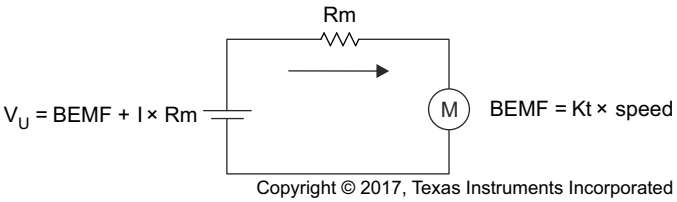

图 8-19. Motor Start-Up Current

8.4.5.1 Start-Up Current Ramp-Up

A fast change in the applied drive current may result in a sudden change in the driving torque. In some applications, this could result in acoustic noise. To avoid this, the DRV10982-Q1 device allows the option of limiting the rate at which the current is applied to the motor. OpLCurrRt[2:0] sets the maximum voltage ramp-up rate that is applied to the motor. The waveforms in 图 8-20 show how this feature can be used to gradually ramp the current applied to the motor.



Start driving with fast current ramp | Start driving with slow current ramp

图 8-20. Motor Start-Up Current Ramp

8.4.6 Closed Loop

In closed loop operation, the DRV10982-Q1 device continuously samples the current in the U phase of the motor and uses this information to estimate the BEMF voltage that is present. The drive state of the motor is controlled based on the estimated BEMF voltage.

8.4.6.1 Half-Cycle Control and Full-Cycle Control

The estimated BEMF used to control the drive state of the motor has two zero-crosses every electrical cycle. The DRV10982-Q1 device can be configured to update the drive state either once every electrical cycle or twice for every electrical cycle. When AdjMode is programmed to 1, half-cycle adjustment is applied. The control logic is triggered at both the rising edge and falling edge. When AdjMode is programmed to 0, full-cycle adjustment is applied. The control logic is triggered only at the rising edge (see 图 8-21).

Half-cycle adjustment provides a faster response when compared with full-cycle adjustment. Use half-cycle adjustment whenever the application requires operation over large dynamic loading conditions. Use the full-cycle adjustment for low-current (<1 A) applications because it offers more tolerance for current-measurement offset errors.

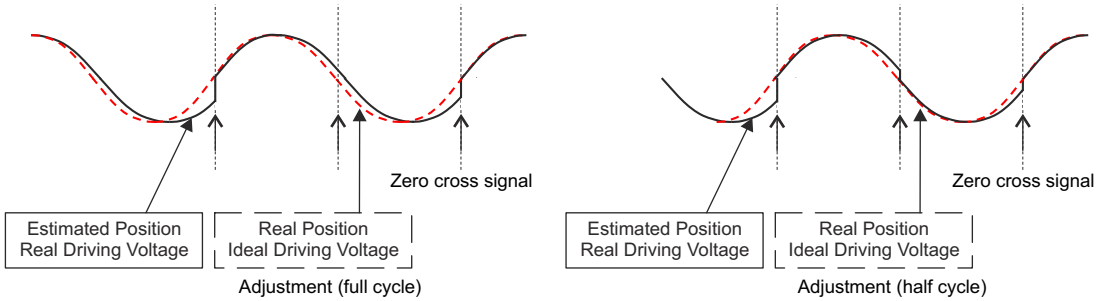

图 8-21. Closed-Loop Control Commutation-Adjustment Mode

8.4.6.2 Analog-Mode Speed Control

The SPEED input pin can be configured to operate as an analog input (SpdCtrlMd = 0).

When configured for analog mode, the voltage range on the SPEED pin can be varied from 0 to V3P3. If SPEED > V_{ANA_FS}, the speed command is maximum. If $V_{ANA_ZS} \leqslant$ SPEED < V_{ANA_FS} the speed command changes linearly according to the magnitude of the voltage applied at the SPEED pin. If SPEED < V_{ANA_ZS} the speed command is to stop the motor. 图 8-22 shows the speed command when operating in analog mode.

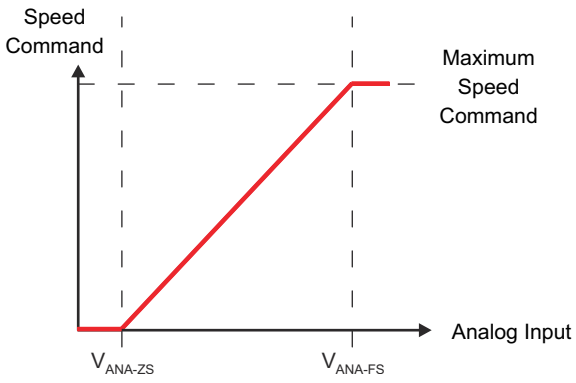

图 8-22. Analog-Mode Speed Command

Copyright © 2023 Texas Instruments Incorporated

8.4.6.3 Digital PWM-Input-Mode Speed Control

If SpdCtrlMd = 1, the SPEED input pin is configured to operate as a PWM-encoded digital input. The PWM duty cycle applied to the SPEED pin can be varied from 0 to 100%. The speed command is proportional to the PWM input duty cycle. The speed command stops the motor when the PWM input keeps at 0 for $t_{EN_SL_SB}$ (see 图 8-23).

The frequency of the PWM input signal applied to the SPEED pin is defined as f_{PWM}. This is the frequency the device can accept to control motor speed. It does not correspond to the PWM output frequency that is applied to the motor phase. The PWM output frequency can be configured to be either 25 kHz when the PWMFreq bit is set to 0 or to 50 kHz when PWMFreq bit is set to 1.

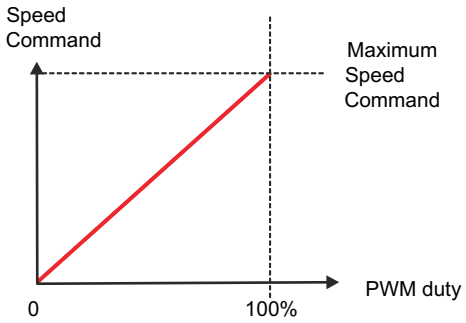

图 8-23. PWM-Mode Speed Command

8.4.6.4 I²C-Mode Speed Control

The DRV10982-Q1 device can also command the speed through the I²C serial interface. To enable this feature, the OverRide bit is set to 1. When the DRV10982-Q1 device is configured to operate in I²C mode, it ignores the signal applied to the SPEED pin.

The speed command can be set by writing the SpdCtrl[8:0] bits. The 9-bit SpdCtrl [8:0] located in the SpeedCtrl registers is used to set the peak amplitude voltage applied to the motor. The maximum speed command is set when SpdCtrl [8:0] is set to 0x1FF (511).

8.4.6.5 Closed-Loop Accelerate

To prevent sudden changes in the torque applied to the motor which could result in acoustic noise, the DRV10982-Q1 device provides the option of limiting the maximum rate at which the speed command changes. ClsLpAccel[2:0] can be programmed to set the maximum rate at which the speed command changes (shown in 图 8-24).

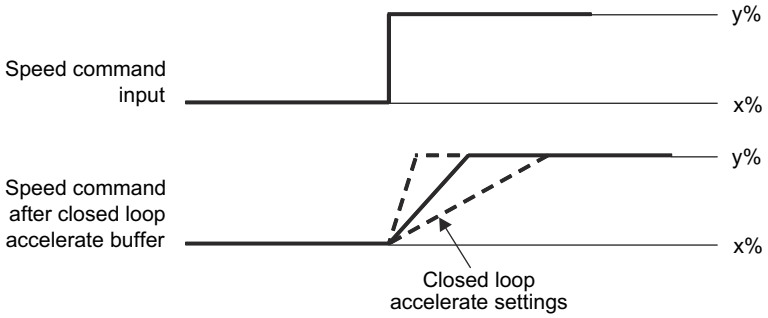

图 8-24. Closed Loop Accelerate

8.4.6.6 Control Coefficient

The DRV10982-Q1 device continuously measures the motor current and uses this information to control the drive state of the motor when operating in closed-loop mode. In applications where noise makes it difficult to

Copyright © 2023 Texas Instruments Incorporated

control the commutation optimally, the CtrlCoef[1:0] can be used to attenuate the feedback used for closed-loop control. The loop is less reactive to the noise on the feedback and provides for a smoother output.

8.4.6.7 Commutation Control Advance Angle

To achieve the best efficiency, it is often desirable to control the drive state of the motor so that the motor phase current is aligned with the motor BEMF voltage.

To align the motor phase current with the motor BEMF voltage, consider the inductive effect of the motor. The voltage applied to the motor should be applied in advance of the motor BEMF voltage (see 图 8-25). The DRV10982-Q1 device provides configuration bits for controlling the time (t_{adv}) between the driving voltage and BEMF.

For motors with salient pole structures, aligning the motor BEMF voltage with the motor current may not achieve the best efficiency. In these applications, the timing advance should be adjusted accordingly. Accomplish this by operating the system at constant speed and load conditions and by adjusting t_{adv} until the minimum current is achieved.

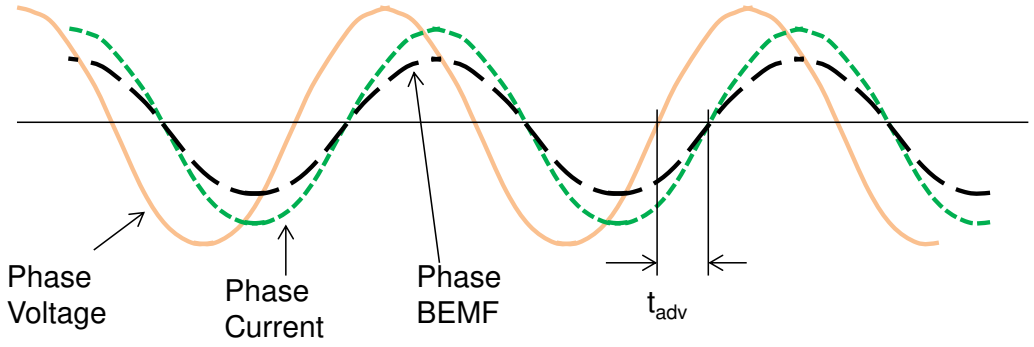

图 8-25. Advance Time (t_{adv}) Definition

The DRV10982-Q1 device has two options for adjusting the motor commutate advance time. When CommAdvMode = 0, mode 0 is selected. When CommAdvMode = 1, mode 1 is selected.

Mode 0: t_{adv} is maintained to be a fixed time relative to the estimated BEMF zero cross as determined by 方程式 5.

$$t_{adv} = t_{SETTING} \quad (5)$$

Mode 1: t_{adv} is maintained to be a variable time relative to the estimated BEMF zero cross as determined by 方程式 6.

$$t_{adv} = t_{SETTING} \times (U - BEMF) / U. \quad (6)$$

where

- U is the phase voltage amplitude
- BEMF is phase BEMF amplitude

$t_{SETTING}$ (in µs) is determined by the configuration of the TCtrlAdvShift [2:0] and TCtrlAdvValue [3:0] bits as defined in 方程式 7. For convenience, the available $t_{SETTING}$ values are provided in 表 8-6.

$$t_{SETTING} = 2.5\ \mu s \times [TCtrlAdvValue[3:0]] << TCtrlAdvShift[2:0] \quad (7)$$

Copyright © 2023 Texas Instruments Incorporated

表 8-6. Configuring Commutation Advance Timing by Adjusting $t_{SETTING}$

TCtrlAdv [6:0] {TCtrlAdvShift[2:0], TCtrlAdvValue[3:0]}		$t_{SETTING}$ (µs)	TCtrlAdv [6:0] {TCtrlAdvShift[2:0], TCtrlAdvValue[3:0]}		$t_{SETTING}$ (µs)	TCtrlAdv [6:0] {TCtrlAdvShift[2:0], TCtrlAdvValue[3:0]}		$t_{SETTING}$ (µs)
Binary	Hex		Binary	Hex		Binary	Hex	
000 0000	0x00	0.0	010 1000	0x28	80	101 1000	0x58	640
000 0001	0x01	2.5	010 1001	0x29	90	101 1001	0x59	720
000 0010	0x02	5	010 1010	0x2A	100	101 1010	0x5A	800
000 0011	0x03	7.5	010 1011	0x2B	110	101 1011	0x5B	880
000 0100	0x04	10	010 1100	0x2C	120	101 1100	0x5C	960
000 0101	0x05	12.5	010 1101	0x2D	130	101 1101	0x5D	1040
000 0110	0x06	15	010 1110	0x2E	140	101 1110	0x5E	1120
000 0111	0x07	17.5	010 1111	0x2F	150	101 1111	0x5F	1200
000 1000	0x08	20	011 1000	0x38	160	110 1000	0x68	1280
000 1001	0x09	22.5	011 1001	0x39	170	110 1001	0x69	1440
000 1010	0x0A	25	011 1010	0x3A	200	110 1010	0x6A	1600
000 1011	0x0B	27.5	011 1011	0x3B	220	110 1011	0x6B	1760
000 1100	0x0C	30	011 1100	0x3C	240	110 1100	0x6C	1920
000 1101	0x0D	32.5	011 1101	0x3D	260	110 1101	0x6D	2080
000 1110	0x0E	35	011 1110	0x3E	280	110 1110	0x6E	2240
000 1111	0x0F	37.5	011 1111	0x3F	300	110 1111	0x6F	2400
001 1000	0x18	40	100 1000	0x48	320	111 1000	0x78	2560
001 1001	0x19	45	100 1001	0x49	360	111 1001	0x79	2880
001 1010	0x1A	50	100 1010	0x4A	400	111 1010	0x7A	3200
001 1011	0x1B	55	100 1011	0x4B	440	111 1011	0x7B	3520
001 1100	0x1C	60	100 1100	0x4C	480	111 1100	0x7C	3840
001 1101	0x1D	65	100 1101	0x4D	520	111 1101	0x7D	4160
001 1110	0x1E	70	100 1110	0x4E	560	111 1110	0x7E	4480
001 1111	0x1F	75	100 1111	0x4F	600	111 1111	0x7F	4800

8.4.7 Current Limit

The DRV10982-Q1 device has several current-limit modes to help ensure optimal control of the motor and to ensure safe operation. The various current-limit modes are listed in 表 8-7. Acceleration current limit is used to provide a means of controlling the amount of current delivered to the motor. This is useful when the system needs to limit the amount of current pulled from the power supply during motor start-up. The lock-detection current limit is a configurable threshold that can be used to limit the current applied to the motor. Overcurrent protection is used to protect the device; therefore, it cannot be disabled or configured to a different threshold. The current-limit modes are described in the following sections.

表 8-7. DRV10982-Q1 Current-Limit Modes

CURRENT LIMIT MODE	SITUATION	ACTION	FAULT DIAGNOSIS
Acceleration current limit	Motor start	Limit the output voltage amplitude	No fault
Lock-detection current limit	Motor locked	Stop driving the motor and enter the lock state	Mechanical rotation error
Overcurrent Protection	Short circuit	Stop driving the motor and enter the lock state	Circuit connection

8.4.7.1 Acceleration Current Limit

The acceleration current limit limits the voltage applied to the motor to prevent the current from exceeding the programmed threshold. The acceleration current limit threshold is configured by writing the SWiLimitThr[3:0] bits to select I_{LIMIT}. The acceleration current limit does not use a direct measurement of current. It uses the

Copyright © 2023 Texas Instruments Incorporated

programmed motor phase resistance, R_{PH_CT}, and programmed BEMF constant, Kt, to limit the voltage applied to the motor, U, as shown in 图 8-26 and 方程式 8.

When the acceleration current limit is active, it does not stop the motor from spinning nor does it trigger a fault. The functionality of the acceleration current limit is only available in closed-loop control.

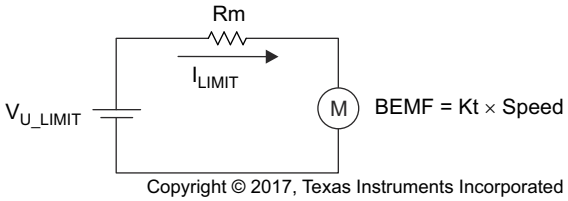

图 8-26. Acceleration Current Limit

$$U_{LIMIT} = I_{LIMIT} \times R_{PH_CT} + Speed \times Kt \quad (8)$$

8.4.8 Lock Detect and Fault Handling

The DRV10982-Q1 device provides several options for determining if the motor becomes locked as a result of some external torque. Five lock-detect schemes work together to ensure the lock condition is detected quickly and reliably. 图 8-27 shows the logic which integrates the various lock-detect schemes. When a lock condition is detected, the DRV10982-Q1 device takes action to prevent continuously driving the motor in order to prevent damage to the system or the motor.

In addition to detecting if there is a locked motor condition, the DRV10982-Q1 device also identifies and takes action if there is no motor connected to the system.

Each of the five lock-detect schemes and the no-motor detection can be disabled by respective register bits LockEn[5:0].

When a lock condition is detected, the FaultReg register provides an indication of which of the six different conditions was detected on Lock5 to Lock0. These bits are reset when the motor restarts. The bits in the FaultReg register are set even if the lock detect scheme is disabled.

The DRV10982-Q1 device reacts to either locked-rotor or no-motor-connected conditions by putting the output drivers into a high-impedance state. To prevent the energy in the motor from pumping the supply voltage, the DRV10982-Q1 device incorporates an anti-voltage-surge (AVS) process whenever the output stages transition into the high-impedance state. The AVS function is described in *节 8.4.9*. After entering the high-impedance state as a result of a fault condition, the system tries to restart after t_{LOCK_OFF}.

Copyright © 2023 Texas Instruments Incorporated

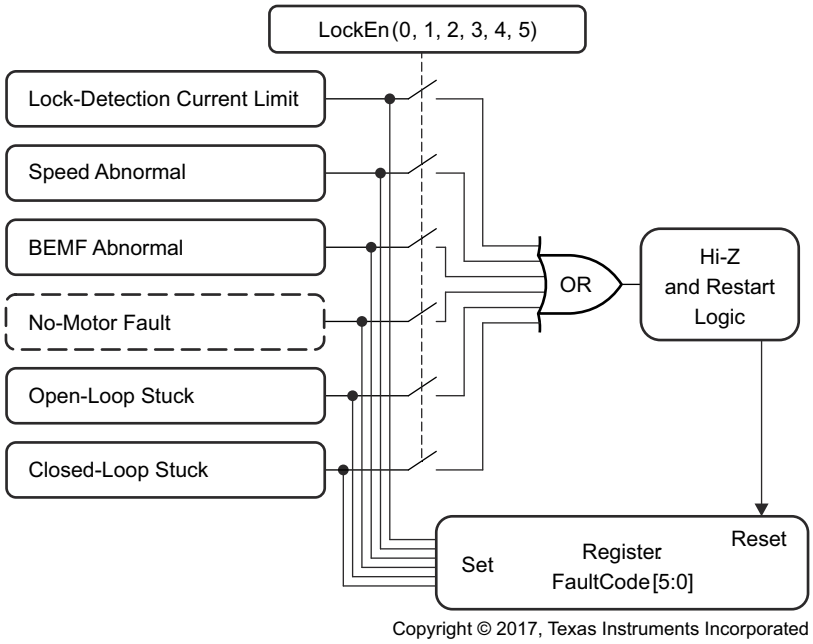

图 8-27. Lock Detect and Fault Diagnose

8.4.8.1 Lock0: Lock-Detection Current Limit Triggered

The lock-detection current-limit function provides a configurable threshold for limiting the current to prevent damage to the system. This is often tripped in the event of a sudden locked-rotor condition. The DRV10982-Q1 device continuously monitors the current in the low-side drivers as shown in 图 8-28. If the current goes higher than the threshold configured by the HWiLimitThr[2:0] bits, then the DRV10982-Q1 device stops driving the motor by placing the output phases into a high-impedance state. The Lock0 bit is set and a lock condition is reported. It retries after t_{LOCK_OFF}.

Set the lock-detection current limit to a higher value than the acceleration current limit.

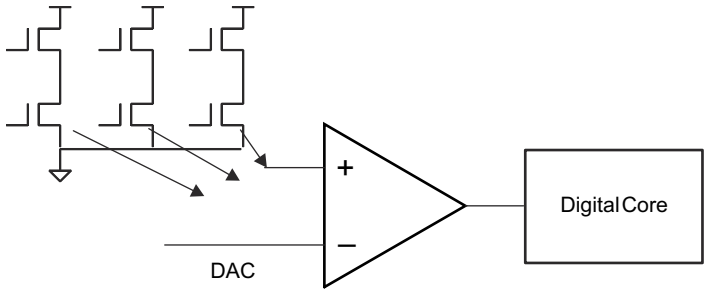

图 8-28. Lock-Detection Current Limit

8.4.8.2 Lock1: Abnormal Speed

If the motor is operating normally, the motor BEMF should always be less than the output amplitude. The DRV10982-Q1 device uses two methods of monitoring the BEMF in the system. The U phase current is monitored to maintain an estimate of BEMF based on the setting for Rm[6:0] {RmShift[2:0],RmValue[3:0]}. In addition, the BEMF is estimated based on the operation speed of the motor and the setting for Kt[6:0] {KtShift[2:0],KtValue[3:0]}. 图 8-29 shows the method for using this information to detect a lock condition. If the motor BEMF is much higher than the output amplitude for a certain period of time, t_{LCK_ETR}, it means the estimated speed is wrong, and the motor has gotten out of phase.

Copyright © 2023 Texas Instruments Incorporated

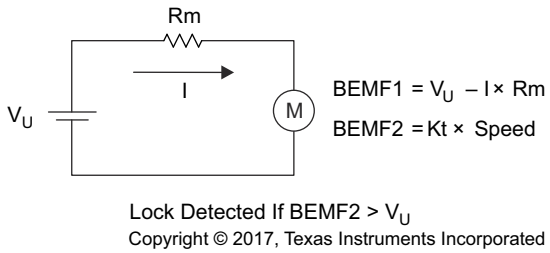

Copyright © 2017, Texas Instruments Incorporated

图 8-29. Lock Detection 1

8.4.8.3 Lock2: Abnormal Kt

For any given motor, the integrated value of BEMF during half of an electrical cycle is constant. The value is determined by the BEMF constant (Kt_{PH}) (see 图 8-30). The BEMF constant is the same regardless of whether the motor is running fast or slow. This constant value is continuously monitored by calculation and used as a criterion to determine the motor lock condition, and is referred to as Ktc.

Based on the Kt_{PH} value programmed, create a range from Kt_low to Kt_high. If Ktc goes beyond the range for a certain period of time, t_{LCK_ETR}, lock is detected. Kt_low and Kt_high are determined by KtLckThr[1:0] (see 图 8-31).

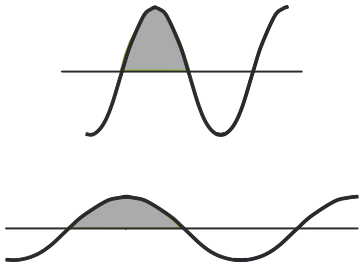

图 8-30. BEMF Integration

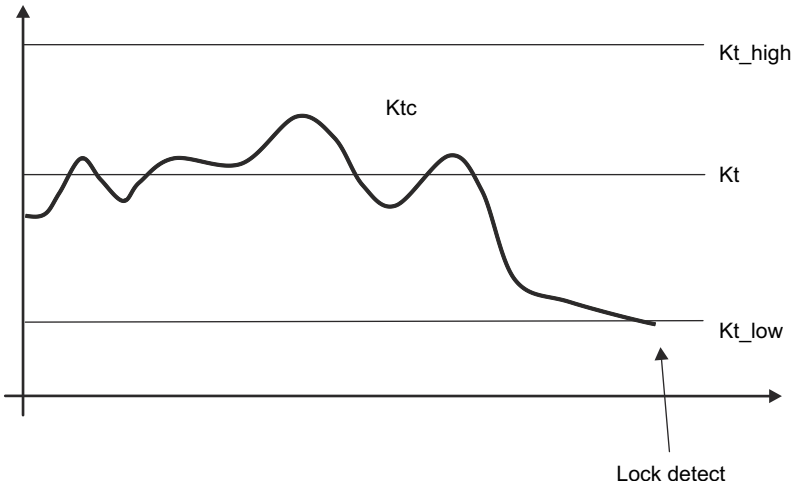

图 8-31. Abnormal-Kt Lock Detect

8.4.8.4 Lock3 (Fault3): No-Motor Fault

The phase U current is checked after transitioning from open loop to closed loop. If phase U current is not greater than 140 mA then the motor is not connected as shown in 图 8-32. This condition is treated and reported as a fault.

Copyright © 2023 Texas Instruments Incorporated

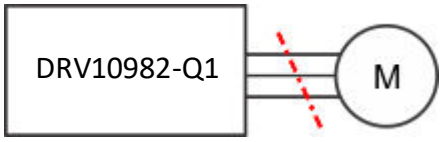

图 8-32. No Motor Error

8.4.8.5 Lock4: Open-Loop Motor-Stuck Lock

Lock4 is used to detect locked-motor conditions while the motor start sequence is in open loop.

For a successful startup, motor speed should be equal to the open-to-closed-loop handoff threshold when the motor is transitioning into closed loop. However, if the motor is locked, the motor speed is not able to match the open-loop drive rate.

If the motor BEMF is not detected for one electrical cycle after the open-loop drive rate exceeds the threshold, then the open loop was unsuccessful as a result of a locked-rotor condition.

8.4.8.6 Lock5: Closed Loop Motor Stuck Lock

If the motor suddenly becomes locked, motor speed and Ktc are not able to be refreshed because the BEMF zero cross of the motor may not appear after the lock. In this condition, lock can also be detected by the following scheme: if the current commutation period is 2× longer than the previous period.

8.4.9 Anti Voltage Suppression Function

When a motor is driven, energy is transferred from the power supply into the motor. Some of this energy is stored in the form of inductive energy or as mechanical energy. The DRV10982-Q1 device includes circuits to prevent this energy from being returned to the power supply, which could result in pumping up the V_{CC} voltage. This function is referred to as the AVS and acts to protect the DRV10982-Q1 device as well as other circuits that share the same V_{CC} connection. Two forms of AVS protection are used to prevent both the mechanical energy and the inductive energy from being returned to the supply. Each of these modes can be independently disabled through the register configuration bits AVSMEn and AVSIndEn.

8.4.9.1 Mechanical AVS Function

If the speed command suddenly drops such that the BEMF voltage generated by the motor is greater than the voltage that is applied to the motor, then the mechanical energy of the motor is returned to the power supply and the V_{CC} voltage surges. The mechanical AVS function works to prevent this from happening. The DRV10982-Q1 device buffers the speed command value and limits the resulting output voltage, U_{MIN}, so that it is not less than the BEMF voltage of the motor. The BEMF voltage in the mechanical AVS function is determined using the programmed value for the motor Kt (Kt[6:0]) along with the speed. 图 8-33 shows the criteria used by the mechanical AVS function.

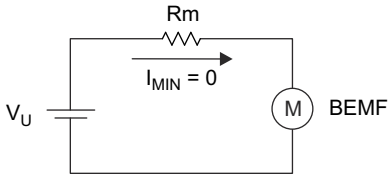

V_{U_MIN} = BEMF + I_{MIN} × Rm = BEMF

Copyright © 2017, Texas Instruments Incorporated

图 8-33. Mechanical AVS

The mechanical AVS function can operate in one of two modes, which can be configured by the register bit AVSMMd:

AVSMMd = 0 – AVS mode is always active to prevent the applied voltage from being less than the BEMF voltage.

AVSMMd = 1 – AVS mode becomes active when V_{CC} reaches 24 V. The motor acts as a generator and returns energy into the power supply until V_{CC} reaches 24 V. This mode can be used to enable faster deceleration of the motor in applications where returning energy to the power supply is allowed.

8.4.9.2 Inductive AVS Function

When the DRV10982-Q1 device transitions from driving the motor into a high-impedance state, the inductive current in the motor windings continues to flow and the energy returns to the power supply through the intrinsic body diodes in the FET output stage (see 图 8-34).

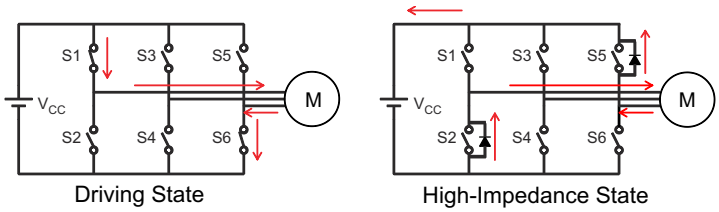

图 8-34. Inductive-Mode Voltage Surge

To prevent the inductive energy from being returned to the power supply, the DRV10982-Q1 system transitions from driving to a high-impedance state by first turning OFF the active high-side drivers, and turning ON all low-side drivers. The DRV10982-Q1 device monitors phase current after entering the BRAKE state and transitions into the high-impedance state when the amplitude of the phase current is less than BrkCurThrSel for a fixed period of time (BrkDoneThr[2:0])(see 图 8-35).

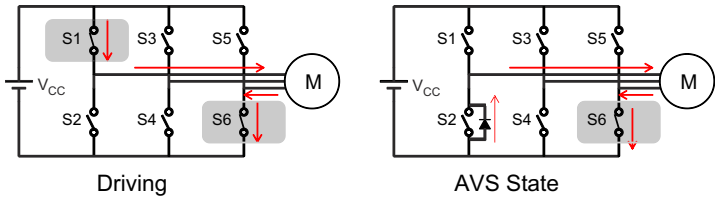

图 8-35. Inductive AVS

In this example, current is applied to the motor through the high-side driver on phase U (S1) and returned through the low-side driver on phase W (S6). The high-side driver on phase U is turned off and after a period of time (to allow the inductive energy in the resulting LR circuit to decay) the low-side driver on phase W is turned off. If BrkDoneThr[2:0] = 000, no brake will be applied and the device will not protect from inductive energy even with the inductive AVS feature enabled.

8.4.10 PWM Output

The DRV10982-Q1 device has 32 options for PWM dead time. These options can be used to configure the time between one of the bridge FETs turning off and the complementary FET turning on. Deadtime[4:0] can be used to configure dead times between 40 and 1280 ns. Take care that the dead time is long enough to prevent the bridge FETs from shooting through.

The DRV10982-Q1 device offers two options for PWM switching frequency. When the configuration bit PWMFreq is set to 0, the output PWM frequency is 25 kHz, and when PWMFreq is set to 1, the output PWM frequency is 50 kHz.

8.4.11 FG Customized Configuration

The DRV10982-Q1 device provides information about the motor speed through the *frequency generate* (FG) pin. FG also provides information about the driving state of the DRV10982-Q1 device.

8.4.11.1 FG Output Frequency

The FG output frequency can be configured by FGcycle[3:0]. The default FG toggles once every electrical cycle (FGcycle = 0000). Many applications configure the FG output so that it provides two pulses for every mechanical

Copyright © 2023 Texas Instruments Incorporated

rotation of the motor. The configuration bits provided in the DRV10982-Q1 device can accomplish this for 2-pole, 4-pole, 6-pole, and 8-pole motors up to 32-pole motors. This is illustrated in 图 8-36 for 2, 4, 6, and 8-pole motors.

图 8-36 shows the DRV10982-Q1 device has been configured to provide FG pulses once every electrical cycle (4 poles), twice every three electrical cycles (6 poles), once every two electrical cycles (8 poles), and once every three electrical cycles (12 poles).

Note that when it is set to two FG pulses every three electrical cycles, the FG output is not 50% duty cycle. Motor speed is able to be measured by monitoring the rising edge of the FG output.

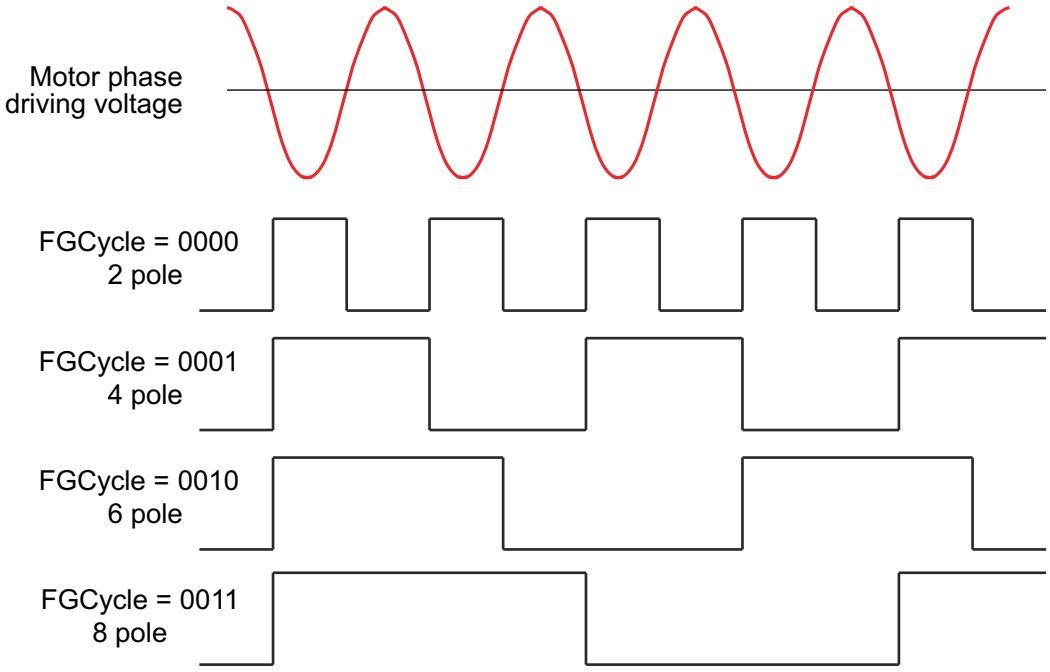

图 8-36. FG Frequency Divider

8.4.11.2 FG Open Loop and Lock Behavior

Note that the FG output reflects the driving state of the motor. During normal closed-loop behavior, the driving state and the actual state of the motor are synchronized. During open-loop acceleration, however, this may not reflect the actual motor speed. During a locked-motor condition, the FG output is driven high.

The DRV10982-Q1 device provides three options for controlling the FG output during open loop, as shown in 图 8-37. The selection of these options is determined by the FGOLSel[1:0] setting.

- Option0: Open-loop, FG output based on driving frequency
- Option1: Open-loop, no FG output (keep high)
- Option2: FG output based on driving frequency at the first power-on startup, and no FG output (keep high) for any subsequent restarts

Copyright © 2023 Texas Instruments Incorporated

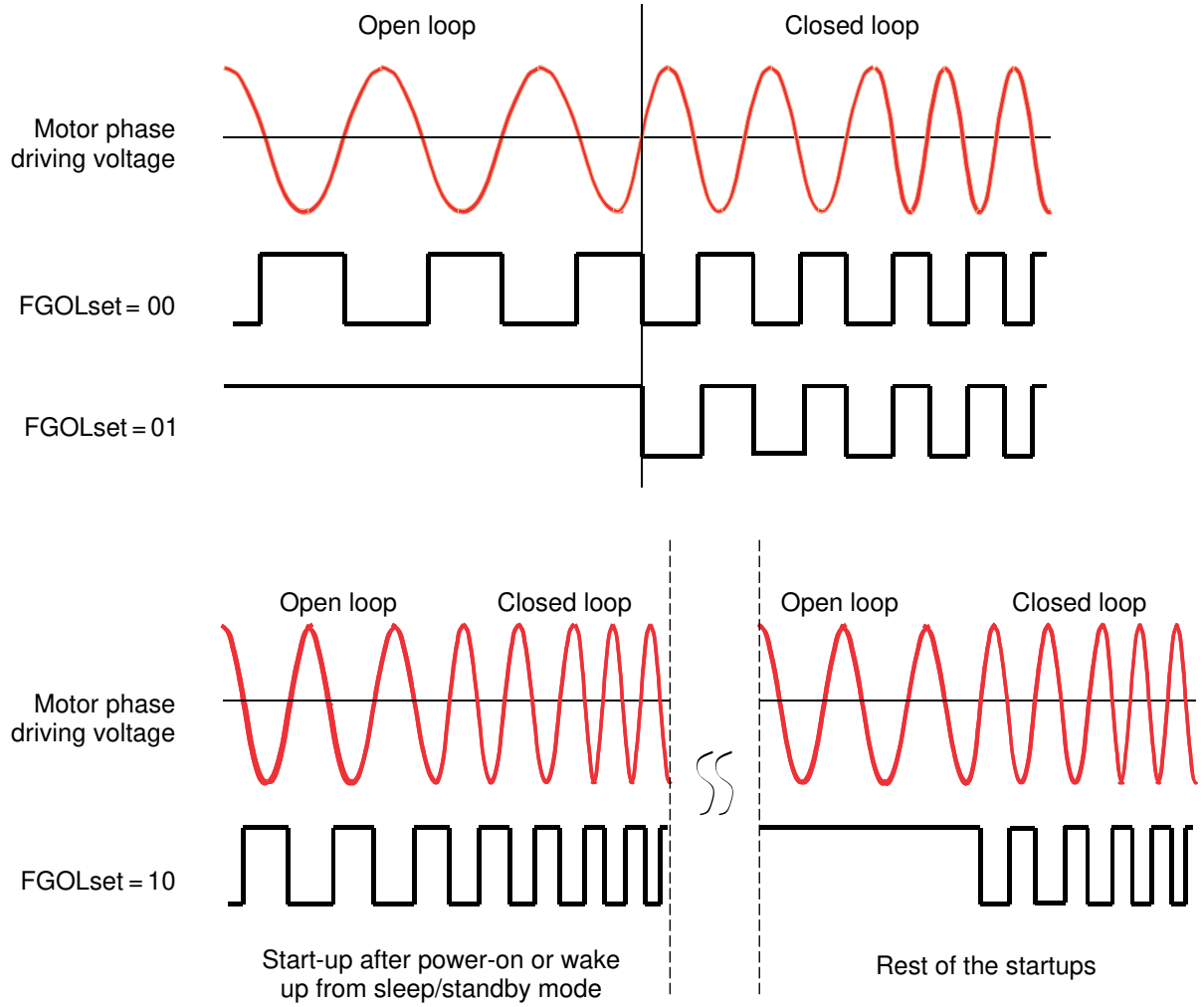

图 8-37. FG Behavior During Open Loop

8.4.12 Diagnostics and Visibility

The DRV10982-Q1 device offers extensive visibility into the motor system operation conditions stored in internal registers. This information can be monitored through the I^2C interface. Information can be monitored relating to the device status, motor speed, supply voltage, speed command, motor phase-voltage amplitude, fault status, and others. The data is updated on the fly.

8.4.12.1 Motor-Status Readback

The motor FaultReg register provides information on overtemperature (OverTemp), overcurrent (OverCurr), and locked rotor (Lock0 – Lock5).

8.4.12.2 Motor-Speed Readback

The motor operation speed is automatically updated in register MotorSpeed while the motor is spinning. The value is determined by the period for calculated BEMF zero crossings on phase U. The electrical speed of the motor is denoted as *Velocity (Hz)* and is calculated as shown in 方程式 9.

$$\text{Velocity (Hz)} = \{\text{MotorSpeed}\} / 10 \quad (9)$$

As an example consider the following:

MotorSpeed = 0x01FF;

Copyright © 2023 Texas Instruments Incorporated

Velocity = 512 (0x01FF) / 10 = 51 Hz

For a 4-pole motor, this translates to: $51 \frac{\text{ecycles}}{\text{second}} \times \frac{1}{2} \frac{\text{mechcycle}}{\text{ecycle}} \times 60 \frac{\text{second}}{\text{minute}} = 1530 \text{ RPM}$

8.4.12.3 Motor Electrical-Period Readback

The motor-operation electrical period is automatically updated in register MotorPeriod while the motor is spinning. The electrical period is measured as the time between calculated BEMF zero crossings for phase U. The electrical period of the motor is denoted as t_{ELE_PERIOD} (µs) and is calculated as shown in 方程式 10.

$$t_{ELE_PERIOD} \text{ (µs)} = \{\text{MotorPeriod}\} \times 10 \quad (10)$$

As an example consider the following:

MotorPeriod = 0x01FF;

t_{ELE_PERIOD} = 512 (0x01FF) × 10 = 5120 µs

The motor electrical period and motor speed satisfies the condition of 方程式 11.

$$t_{ELE_PERIOD} \text{ (s)} \times \text{Velocity (Hz)} = 1 \quad (11)$$

8.4.12.4 BEMF Constant Read Back

For any given motor, the integrated value of BEMF during half of an electronic cycle is a constant, Ktc (see 节 8.4.8.3).

The integration of the motor BEMF is processed periodically (updated every electrical cycle) while the motor is spinning. The result is stored in register MotorKt.

The relationship is shown in 方程式 12.

$$\text{Ktc (V/Hz)} = \{\text{MotorKt}\} / 2 / 1090 \quad (12)$$

8.4.12.5 Motor Estimated Position by IPD

After inductive sense is executed, the rotor position is detected within 60 electrical degrees of resolution. The position is stored in register IPDPosition.

The value stored in IPDPosition corresponds to one of the six motor positions plus the IPD advance angle as shown in 表 8-8. For more information about IPD, see 节 8.4.3.5.2.

表 8-8. IPD Position Read Back

	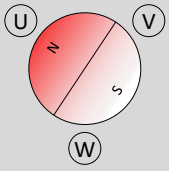	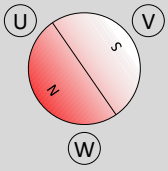	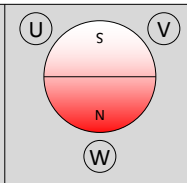	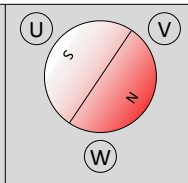	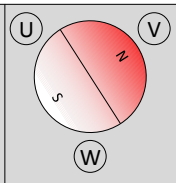	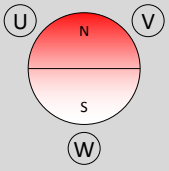
Rotor position (°)	0	60	120	180	240	300
Data1	0	43	85	128	171	213
IPD advance angle	30	60	90	120		
Data2	22	44	63	85		
Register data	(Data1 + Data2) mod (256)					

8.4.12.6 Supply-Voltage Readback

The power supply is monitored periodically during motor operation. This information is available in register SupplyVoltage. The power supply voltage is recorded as shown in 方程式 13.

$V_{POWERSUPPLY}$ (V) = Supply Voltage × 30 V / 256 (13)

Copyright © 2023 Texas Instruments Incorporated

8.4.12.7 Speed-Command Readback

The DRV10982-Q1 device converts the various types of speed command into a speed command value (SpeedCmd) as shown in 图 8-38. By reading SpeedCmd, the user can observe PWM input duty (PWM digital mode), analog voltage (analog mode), or I²C data (I²C mode). This value is calculated as shown in 方程式 14.

方程式 14 shows how the speed command as a percentage can be calculated and set in SpeedCmd.

$$Duty_{SPEED}\ (\%) = SpeedCmd \times 100 / 255 \quad (14)$$

where

- $Duty_{SPEED}$ = Speed command as a percentage
- SpeedCmd = Register value

8.4.12.8 Speed-Command Buffer Readback

If acceleration current limit and AVS are enabled, the PWM duty cycle output (read back at spdCmdBuffer) may not always match the input command (read back at SpeedCmd) shown in 图 8-38. See 节 *8.4.9* and 节 *8.4.7*.

By reading the value of spdCmdBuffer, the user can observe buffered speed command (output PWM duty cycle) to the motor.

方程式 15 shows how the buffered speed is calculated.

$$Duty_{OUTPUT}\ (\%) = spdCmdBuffer \times 100 / 255 \quad (15)$$

where

- $Duty_{OUTPUT}$ = The maximum duty cycle of the output PWM, which represents the output amplitude in percentage.
- spdCmdBuffer = Register value

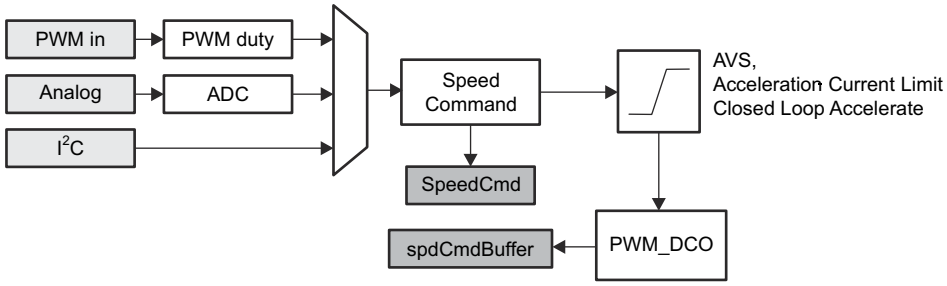

图 8-38. SpeedCmd and spdCmdBuffer Registers

8.4.12.9 Fault Diagnostics

See 节 *8.4.8*.

8.5 Register Maps

8.5.1 I²C Serial Interface

The DRV10982-Q1 device provides an I²C slave interface with slave address 101 0010. TI recommends a pullup resistor of 4.7 kΩ to 3.3 V for I²C interface ports SCL and SDA. The protocol for the I²C interface is given in 图 8-39.

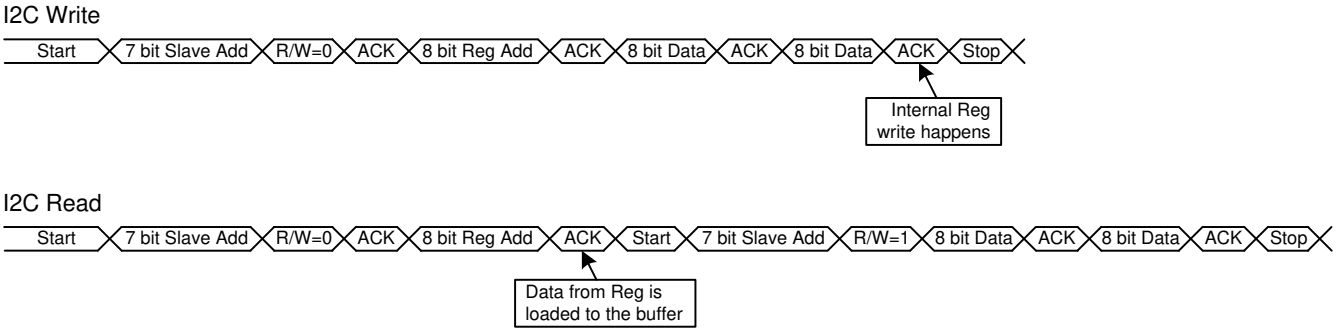

图 8-39. I²C Protocol

Seven read/write registers (0x30:0x36) are used to set motor speed and control device registers and EEPROM. Device operation status can be read back through nine read-only registers (0x0:0x08). Another seven EEPROM registers (0x90:0x96) can be accessed to program motor parameters and optimize the spin-up profile for the application.

8.5.2 Register Map

REGISTER NAME	ADDR.	D15	D14	D13	D12	D11	D10	D9	D8
		D7	D6	D5	D4	D3	D2	D1	D0
FaultReg (1) (2)	0x00	OverTemp	TempWarning	VCC_OV	VREG_OC	OverCurr	CP_UVLO	VREG_UVLO	VCC_UVLO
		V3P3_UVLO	Reserved	Lock5	Lock4	Lock3	Lock2	Lock1	Lock0
MotorSpeed (1)	0x01	MotorSpeed[15:0]							
MotorPeriod (1)	0x02	MotorPeriod[15:0]							
MotorKt (1)	0x03	MotorKt[15:0]							
MotorCurrent (1)	0x04	Reserved					MotorCurrent[10:8]		
		MotorCurrent[7:0]							
IPDPosition / SupplyVoltage (1)	0x05	IPDPosition[7:0]							
		SupplyVoltage[7:0]							
SpeedCmd / spdCmdBuffer(1)	0x06	SpeedCmd[7:0]							
		spdCmdBuffer[7:0]							
AnalogInLvl (1)	0x07	Reserved						commandSenseAdc[9:8]	
		commandSenseAdc[7:0]							
Device ID / Revision ID (1)	0x08	DieID[7:0]							
		RevisionID[7:0]							
SpeedCtrl (3)	0x30	OverRide	Reserved						SpeedCtrl[8]
		SpeedCtrl[7:0]							
EEPROM Programming1 (3)	0x31	ENPROGKEY[15:0]							
EEPROM Programming2 (3)	0x32	Reserved							
		Reserved							eeReadyStatus

Copyright © 2023 Texas Instruments Incorporated

REGISTER NAME	ADDR.	D15	D14	D13	D12	D11	D10	D9	D8
		D7	D6	D5	D4	D3	D2	D1	D0
EEPROM Programming3 (3)	0x33	Reserved							
		eeIndAddress[7:0]							
EEPROM Programming4 (3)	0x34	eeIndWData[15:0]							
EEPROM Programming5 (3)	0x35	Reserved			ShadowReg En	Reserved			eeRefresh
		Reserved					eeWRnEn	eeAccMode[1:0]	
EEPROM Programming6 (3)	0x36	eeIndRData[15:0]							
EECTRL	0x60	MTR_DIS	Reserved						
		Reserved							
CONFIG1 (4)	0x90	SSMConfig[1:0]		FGOLSel[1:0]		FGCycle[3:0]			
		ClkCycleAdjust	RMShift[2:0]			RMValue[3:0]			
CONFIG2 (4)	0x91	Reserved	KtShift[2:0]			KtValue[3:0]			
		CommAdvMode	TCtrlAdvShift[2:0]			TCtrlAdvValue[3:0]			
CONFIG3 (4)	0x92	ISDThr[1:0]		BrkCurrThrSel	BEMF_HYS	ISDEn	RvsDrEn	RvsDrThr[1:0]	
		OpenLCurr[1:0]		OpLCurrRt[2:0]			BrkDoneThr[2:0]		
CONFIG4(4)	0x93	Reserved	AccelRangeSel	StAccel2[2:0]			StAccel[2:0]		
		Op2ClsThr[4:0]					AlignTime[2:0]		
CONFIG5 (4)	0x94	OTWarning_ILimit[1:0]		LockEn5	LockEn4	LockEn3	LockEn2	LockEn1	LockEn0
		SwILimit[3:0]				HwILimit[2:0]			IPDasHwILimit
CONFIG6 (4)	0x95	SpdCtlrMd	PWMFreq	KtLckThr[1:0]		AvSIndEn	AVSMEn	AVSMMd	IPDRIsMd
		CLoopDis	ClsLpAccel[2:0]			DutyCycleLimit[1:0]		SlewRate[1:0]	
CONFIG7 (4)	0x96	IPDAdvcAg[1:0]		IPDCurrThr[3:0]				IPDClk[1:0]	
		Reserved	CtrlCoef[1:0]		DeadTime[4:0]				

(1) Read only
(2) Fault Register requires 0xFF to be written to the register to clear the bits.
(3) R/W
(4) EEPROM

Copyright © 2023 Texas Instruments Incorporated

表 8-9. Default EEPROM Values

ADDRESS	DEFAULT VALUE
0x90	0x1048
0x91	0x2F3B
0x92	0x0050
0x93	0x1B8A
0x94	0x3FAF
0x95	0x3C43
0x96	0x016A

8.5.3 Register Descriptions

表 8-10. Access Type Codes

ACCESS TYPE	CODE	DESCRIPTION
READ TYPE		
R	R	Read
WRITE TYPE		
W	W	Write
W1C	W 1C	Write 1 to clear
RESET OR DEFAULT VALUE		
-n		Value after reset or the default value

8.5.3.1 FaultReg Register (address = 0x00) [reset = 0x00]

图 8-40. FaultReg Register

15	14	13	12	11	10	9	8
OverTemp	TempWarning	VCC_OV	VREG_OC	OverCurr	CP_UVLO	VREG_UVLO	VCC_UVLO
R/W1C-0	R//W1C-0	R/W1C-0	R/W1C-0	R/W1C-0	R/W1C-0	R/W1C-0	R/W1C-0
7	6	5	4	3	2	1	0
V3P3_UVLO	Reserved	Lock5	Lock4	Lock3	Lock2	Lock1	Lock0
R/W1C-0	R/W1C-0	R/W1C-0	R/W1C-0	R/W1C-0	R/W1C-0	R/W1C-0	R/W1C-0

表 8-11. FaultReg Register Field Descriptions

Bit	Field	Type	Reset	Description
15	OverTemp	R//W1C	0	Bit to indicate device temperature is over the limit.
14	TempWarning	R/W1C	0	Bit to indicate device temperature is over the warning limit.
13	VCC_OV	R/W1C	0	Bit to indicate the supply voltage is above the upper limit.
12	VREG_OC	R/W1C	0	Bit to indicate that the step-down regulator is in an overcurrent condition.
11	OverCurr	R/W1C	0	Bit to indicate that an overcurrent event happened.
10	CP_UVLO	R/W1C	0	Bit to indicate that the charge pump is in an undervoltage fault condition.
9	VREG_UVLO	R/W1C	0	Bit to indicate that the step-down regulator (VREG) is in an undervoltage fault condition.
8	VCC_UVLO	R/W1C	0	Bit to indicate that the supply (V_{CC}) is in an undervoltage fault condition.

Copyright © 2023 Texas Instruments Incorporated

表 8-11. FaultReg Register Field Descriptions (continued)

Bit	Field	Type	Reset	Description
7	V3P3_UVLO	R/W1C	0	Bit to indicate that the 3.3 V LDO regulator is in an undervoltage fault condition.
6	Reserved	R/W1C	0	Do not access this bit.
5	Lock5	R/W1C	0	Stuck in closed loop fault
4	Lock4	R/W1C	0	Stuck in open loop fault
3	Lock3	R/W1C	0	No motor fault
2	Lock2	R/W1C	0	Kt abnormal fault
1	Lock1	R/W1C	0	Speed abnormal fault
0	Lock0	R/W1C	0	Hardware current-limit fault

8.5.3.2 MotorSpeed Register (address = 0x01) [reset = 0x00]

图 8-41. MotorSpeed Register

15	14	13	12	11	10	9	8
MotorSpeed[15]	MotorSpeed[14]	MotorSpeed[13]	MotorSpeed[12]	MotorSpeed[11]	MotorSpeed[10]	MotorSpeed[9]	MotorSpeed[8]
R-0	R-0	R-0	R-0	R-0	R-0	R-0	R-0
7	6	5	4	3	2	1	0
MotorSpeed[7]	MotorSpeed[6]	MotorSpeed[5]	MotorSpeed[4]	MotorSpeed[3]	MotorSpeed[2]	MotorSpeed[1]	MotorSpeed[0]
R-0	R-0	R-0	R-0	R-0	R-0	R-0	R-0

表 8-12. MotorSpeed Register Field Descriptions

Bit	Field	Type	Reset	Description
15:0	MotorSpeed[15:0]	R	0x00	16-bit value indicating the motor speed. Motor speed in Hz = MotorSpeed[15:0] / 10

8.5.3.3 MotorPeriod Register (address = 0x02) [reset = 0x00]

图 8-42. MotorPeriod Register

15	14	13	12	11	10	9	8
MotorPeriod[15]	MotorPeriod[14]	MotorPeriod[13]	MotorPeriod[12]	MotorPeriod[11]	MotorPeriod[10]	MotorPeriod[9]	MotorPeriod[8]
R-0	R-0	R-0	R-0	R-0	R-0	R-0	R-0
7	6	5	4	3	2	1	0
MotorPeriod[7]	MotorPeriod[6]	MotorPeriod[5]	MotorPeriod[4]	MotorPeriod[3]	MotorPeriod[2]	MotorPeriod[1]	MotorPeriod[0]
R-0	R-0	R-0	R-0	R-0	R-0	R-0	R-0

表 8-13. MotorPeriod Register Field Descriptions

Bit	Field	Type	Reset	Description
15:0	MotorPeriod[15:0]	R	0x00	16-bit value indicating the motor period. Motor period = MotorPeriod[15:0] × 10 = period in μs

Copyright © 2023 Texas Instruments Incorporated

8.5.3.4 MotorKt Register (address = 0x03) [reset = 0x00]

图 8-43. MotorKt Register

15	14	13	12	11	10	9	8
MotorKt[15]	MotorKt[14]	MotorKt[13]	MotorKt[12]	MotorKt[11]	MotorKt[10]	MotorKt[9]	MotorKt[8]
R-0	R-0	R-0	R-0	R-0	R-0	R-0	R-0
7	6	5	4	3	2	1	0
MotorKt[7]	MotorKt[6]	MotorKt[5]	MotorKt[4]	MotorKt[3]	MotorKt[2]	MotorKt[1]	MotorKt[0]
R-0	R-0	R-0	R-0	R-0	R-0	R-0	R-0

表 8-14. MotorKt Register Field Descriptions

Bit	Field	Type	Reset	Description
15:0	MotorKt[15:0]	R	0x00	16-bit value indicating the motor measured velocity constant. Ktc (V/Hz) = {MotorKt[15:0]} / 2 / 1090

8.5.3.5 MotorCurrent Register (address = 0x04) [reset = 0x00]

图 8-44. MotorCurrent Register

15	14	13	12	11	10	9	8
Reserved	Reserved	Reserved	Reserved	Reserved	MotorCurrent[10]	MotorCurrent[9]	MotorCurrent[8]
R-0	R-0	R-0	R-0	R-0	R-0	R-0	R-0
7	6	5	4	3	2	1	0
MotorCurrent[7]	MotorCurrent[6]	MotorCurrent[5]	MotorCurrent[4]	MotorCurrent[3]	MotorCurrent[2]	MotorCurrent[1]	MotorCurrent[0]
R-0	R-0	R-0	R-0	R-0	R-0	R-0	R-0

表 8-15. MotorCurrent Register Field Descriptions

Bit	Field	Type	Reset	Description
15:11	Reserved	R	0	Do not access these bits.
10:0	MotorCurrent[10:0]	R	0x00	11-bit value indicating the motor peak current. if MotorCurrent[10:0] >=1023 Current (A) = 3 × (MotorCurrent[10:0] – 1023) / 512 Else Current (A) = 3 × (MotorCurrent[10:0]) / 512

8.5.3.6 IPDPosition – SupplyVoltage Register (address = 0x05) [reset = 0x00]

图 8-45. IPDPosition – SupplyVoltage Register

15	14	13	12	11	10	9	8
IPDPosition [7]	IPDPosition [6]	IPDPosition [5]	IPDPosition [4]	IPDPosition [3]	IPDPosition [2]	IPDPosition [1]	IPDPosition [0]
R-0	R-0	R-0	R-0	R-0	R-0	R-0	R-0
7	6	5	4	3	2	1	0
SupplyVoltage[7]	SupplyVoltage[6]	SupplyVoltage[5]	SupplyVoltage[4]	SupplyVoltage[3]	SupplyVoltage[2]	SupplyVoltage[1]	SupplyVoltage[0]
R-0	R-0	R-0	R-0	R-0	R-0	R-0	R-0

表 8-16. IPDPosition – SupplyVoltage Register Field Descriptions

Bit	Field	Type	Reset	Description
15:8	IPDPosition [7:0]	R	0x0	8-bit value indicating the estimated motor position during IPD plus the IPD advance angle (see 表 8-8)

Copyright © 2023 Texas Instruments Incorporated

表 8-16. IPDPosition – SupplyVoltage Register Field Descriptions (continued)

Bit	Field	Type	Reset	Description
7:0	SupplyVoltage[7:0]	R	0x0	8-bit value indicating the supply voltage $V_{POWERSUPPLY}$ (V) = SupplyVoltage[7:0] × 30 V / 255 For example, SupplyVoltage[7:0] = 0x67, $V_{POWERSUPPLY}$ (V) = 0x67 (102) × 30 / 255 = 12 V

8.5.3.7 SpeedCmd – spdCmdBuffer Register (address = 0x06) [reset = 0x00]

图 8-46. SpeedCmd – spdCmdBuffer Register

15	14	13	12	11	10	9	8
SpeedCmd[7]	SpeedCmd[6]	SpeedCmd[5]	SpeedCmd[4]	SpeedCmd[3]	SpeedCmd[2]	SpeedCmd[1]	SpeedCmd[0]
R-0	R-0	R-0	R-0	R-0	R-0	R-0	R-0
7	6	5	4	3	2	1	0
spdCmdBuffer[[7]	spdCmdBuffer[[6]	spdCmdBuffer[[5]	spdCmdBuffer[[4]	spdCmdBuffer[[3]	spdCmdBuffer[[2]	spdCmdBuffer[[1]	spdCmdBuffer[[0]
R-0	R-0	R-0	R-0	R-0	R-0	R-0	R-0

表 8-17. SpeedCmd – spdCmdBuffer Register Field Descriptions

Bit	Field	Type	Reset	Description
15:8	SpeedCmd[7:0]	R	0x0	8-bit value indicating the speed command based on analog or PWMin or I^2C. FF indicates 100% speed command.
7:0	spdCmdBuffer[7:0]	R	0x0	8-bit value indicating the speed command after buffer output. FF indicates 100% speed command.

8.5.3.8 AnalogInLvl Register (address = 0x07) [reset = 0x00]

图 8-47. AnalogInLvl Register

15	14	13	12	11	10	9	8
Reserved	Reserved	Reserved	Reserved	Reserved	Reserved	commandSnsADC[9]	commandSnsADCt[8]
R-0	R-0	R-0	R-0	R-0	R-0	R-0	R-0
7	6	5	4	3	2	1	0
commandSnsADC[7]	commandSnsADC[6]	commandSnsADC[5]	commandSnsADC[4]	commandSnsADC[3]	commandSnsADC[2]	commandSnsADC[1]	commandSnsADC[0]
R-0	R-0	R-0	R-0	R-0	R-0	R-0	R-0

表 8-18. AnalogInLvl Register Field Descriptions

Bit	Field	Type	Reset	Description
15:10	Reserved	R	0	Do not access these bits.
9:0	commandSnsADC[9:0]	R	0x00	10-bit value indicating the analog speed input converted to a digital word. AnalogSPEED (V) = AnalogInLvl × V3P3 / 1024

8.5.3.9 DeviceID – RevisionID Register (address = 0x08) [reset = 0x00]

图 8-48. DeviceID – RevisionID Register

15	14	13	12	11	10	9	8
DieID[7]	DieID[6]	DieID[5]	DieID[4]	DieID[3]	DieID[2]	DieID[1]	DieID[0]
R-0	R-0	R-0	R-0	R-0	R-0	R-0	R-0
7	6	5	4	3	2	1	0
RevisionID[7]	RevisionID[6]	RevisionID[5]	RevisionID[4]	RevisionID[3]	RevisionID[2]	RevisionID[1]	RevisionID[0]

Copyright © 2023 Texas Instruments Incorporated

图 8-48. DeviceID – RevisionID Register (continued)

R-0	R-0	R-0	R-0	R-0	R-0	R-0	R-0

表 8-19. DeviceID – RevisionID Register Field Descriptions

Bit	Field	Type	Reset	Description
15:10	DieID[7:0]	R	0	8-bit unique device identification.
9:0	RevisionID[7:0]	R	0x00	8-bit revision ID for the device 0000 0000 → REV A 0000 0001 → REV B ...

8.5.3.10 DeviceID – RevisionID Register (address = 0x08) [reset = 0x00]

图 8-49. DeviceID – RevisionID Register

15	14	13	12	11	10	9	8
DieID[7]	DieID[6]	DieID[5]	DieID[4]	DieID[3]	DieID[2]	DieID[1]	DieID[0]
R-0	R-0	R-0	R-0	R-0	R-0	R-0	R-0
7	6	5	4	3	2	1	0
RevisionID[7]	RevisionID[6]	RevisionID[5]	RevisionID[4]	RevisionID[3]	RevisionID[2]	RevisionID[1]	RevisionID[0]
R-0	R-0	R-0	R-0	R-0	R-0	R-0	R-0

表 8-20. DeviceID – RevisionID Register Field Descriptions

Bit	Field	Type	Reset	Description
15:8	DieID[7:0]	R	0x0	8-bit unique device identification.
7:0	RevisionID[7:0]	R	0x0	8-bit revision ID for the device 0000 0000 → REV A 0000 0001 → REV B ...

8.5.3.11 Unused Registers (addresses = 0x011 Through 0x2F)

Registers 0x09 through 0x2F are not used.

8.5.3.12 SpeedCtrl Register (address = 0x30) [reset = 0x00]

图 8-50. SpeedCtrl Register

15	14	13	12	11	10	9	8
OverRide	Reserved	Reserved	Reserved	Reserved	Reserved	Reserved	SpeedCtrl[8]
R/W-0	R-0	R-0	R-0	R-0	R-0	R-0	R/W-0
7	6	5	4	3	2	1	0
SpeedCtrl[7]	SpeedCtrl[6]	SpeedCtrl[5]	SpeedCtrl[4]	SpeedCtr[3]	SpeedCtrl[2]	SpeedCtrl[1]	SpeedCtrl[0]
R/W-0	R/W-0	R/W-0	R/W-0	R/W-0	R/W-0	R/W-0	R/W-0

表 8-21. SpeedCtrl Register Field Descriptions

Bit	Field	Type	Reset	Description
15	OverRide	R/W	0	Used to control the SpdCtrl[8:0] bits. If OverRide = 1, the user can write the speed command directly through I^2C.
14:9	Reserved	R	0x0	Do not access this bit.
8:0	SpeedCtrl[8:0]	R/W	0x00	9-bit value used for the motor speed. If OverRide = 1, speed command can be written by the user through I^2C.

Copyright © 2023 Texas Instruments Incorporated

8.5.3.13 EEPROM Programming1 Register (address = 0x31) [reset = 0x00]

图 8-51. EEPROM Programming1 Register

15	14	13	12	11	10	9	8
ENPROGKEY [15]	ENPROGKEY [14]	ENPROGKEY [13]	ENPROGKEY [12]	ENPROGKEY [11]	ENPROGKEY [10]	ENPROGKEY [9]	ENPROGKEY [9]
R/W-0	R/W-0	R/W-0	R/W-0	R/W-0	R/W-0	R/W-0	R/W-0
7	6	5	4	3	2	1	0
ENPROGKEY [7]	ENPROGKEY [6]	ENPROGKEY [5]	ENPROGKEY [4]	ENPROGKEY [3]	ENPROGKEY [2]	ENPROGKEY [1]	ENPROGKEY [0]
R/W-0	R/W-0	R/W-0	R/W-0	R/W-0	R/W-0	R/W-0	R/W-0

表 8-22. EEPROM Programming1 Register Field Descriptions

Bit	Field	Type	Reset	Description
15:0	ENPROGKEY[15:0]	R/W	0x00	EEPROM access key 0xCODE → access key for customer space; registers 0x90 to 0x96

8.5.3.14 EEPROM Programming2 Register (address = 0x32) [reset = 0x00]

图 8-52. EEPROM Programming2 Register

15	14	13	12	11	10	9	8
Reserved	Reserved	Reserved	Reserved	Reserved	Reserved	Reserved	Reserved
R-0	R-0	R-0	R-0	R-0	R-0	R-0	R-0
7	6	5	4	3	2	1	0
Reserved	Reserved	Reserved	Reserved	Reserved	Reserved	Reserved	eeReadyStatus
R-0	R-0	R-0	R-0	R-0	R-0	R-0	R-0

表 8-23. EEPROM Programming2 Register Field Descriptions

Bit	Field	Type	Reset	Description
15:1	Reserved	R	0x00	Do not access these bits.
0	eeReadyStatus	R	0	EEPROM status bit. 0: EEPROM not ready for read/write access 1: EEPROM ready for read/write access

8.5.3.15 EEPROM Programming3 Register (address = 0x33) [reset = 0x00]

图 8-53. EEPROM Programming3 Register

15	14	13	12	11	10	9	8
Reserved	Reserved	Reserved	Reserved	Reserved	Reserved	Reserved	Reserved
R-0	R-0	R-0	R-0	R-0	R-0	R-0	R-0
7	6	5	4	3	2	1	0
eeIndAddress [7]	eeIndAddress [6]	eeIndAddress [5]	eeIndAddress [4]	eeIndAddress [3]	eeIndAddress [2]	eeIndAddress [1]	eeIndAddress [0]
R-0	R-0	R-0	R-0	R-0	R-0	R-0	R-0

表 8-24. EEPROM Programming3 Register Field Descriptions

Bit	Field	Type	Reset	Description
15:8	Reserved	R	0x0	Do not access these bits.

Copyright © 2023 Texas Instruments Incorporated

表 8-24. EEPROM Programming3 Register Field Descriptions (continued)

Bit	Field	Type	Reset	Description
7:0	eeIndAddress[7:0]	R	0x0	EEPROM individual access address. Contents of this register define the address of EEPROM for the individual access operation. For example, for writing/reading CONFIG1 in individual access mode happens if eeIndAddress = 0x90.

8.5.3.16 EEPROM Programming4 Register (address = 0x34) [reset = 0x00]

图 8-54. EEPROM Programming4 Register

15	14	13	12	11	10	9	8
eeIndWData [15]	eeIndWData [14]	eeIndWData [13]	eeIndWData [12]	eeIndWData [11]	eeIndWData [10]	eeIndWData[9]	eeIndWData[8]
R/W-0	R/W-0	R/W-0	R/W-0	R/W-0	R/W-0	R/W-0	R/W-0
7	6	5	4	3	2	1	0
eeIndWData[7]	eeIndWData[6]	eeIndWData[5]	eeIndWData[4]	eeIndWData[3]	eeIndWData[2]	eeIndWData[1]	eeIndWData[0]
R/W-0	R/W-0	R/W-0	R/W-0	R/W-0	R/W-0	R/W-0	R/W-0

表 8-25. EEPROM Programming4 Register Field Descriptions

Bit	Field	Type	Reset	Description
15:0	eeIndWData[15:0]	R/W	0x00	EEPROM individual access write data Contents of this register are used to write to EEPROM data of the registers specified by eeIndAddress.

8.5.3.17 EEPROM Programming5 Register (address = 0x35) [reset = 0x00]

图 8-55. EEPROM Programming5 Register

15	14	13	12	11	10	9	8
Reserved	Reserved	Reserved	ShadowRegEn	Reserved	Reserved	Reserved	
R-0	R-0	R-0	R/W-0	R-0	R-0	R-0	R-0
7	6	5	4	3	2	1	0
Reserved	Reserved	Reserved	Reserved	Reserved	eeWRnEn	eeAccMode[1]	eeAccMode[0]
R-0	R-0	R-0	R-0	R-0	R/W-0	R/W-0	R/W-0

表 8-26. EEPROM Programming5 Register Field Descriptions

Bit	Field	Type	Reset	Description
15:13	Reserved	R	000	Do not access these bits.
12	ShadowRegEn	R/W	0	Enable shadow register. 0 : Shadow register is not used. 1 : Shadow register values are used for device operation (EEPROM contents are ignored). I^2C read returns the contents of the shadow registers.
11:9	Reserved	R	000	Do not access these bits.
8	eeRefresh	R/W	0	EEPROM refresh 0 : normal operation 1 : Sync shadow registers with contents of EEPROM.
7:3	Reserved	R	0x0	Do not access these bits.
2	eeWRnEn	R/W	0	EEPROM Write/ $\overline{\text{Read}}$ enable 0 : EEPROM read enable 1 : EEPROM write enable.

Copyright © 2023 Texas Instruments Incorporated

表 8-26. EEPROM Programming5 Register Field Descriptions (continued)

Bit	Field	Type	Reset	Description
1:0	eeAccMode[1:0]	R/W	00	EEPROM access mode 00 : EEPROM access disabled 01 : EEPROM individual access enabled 10 : EEPROM mass access enabled 11 : Do not access these bits.

8.5.3.18 EEPROM Programming6 Register (address = 0x36) [reset = 0x00]

图 8-56. EEPROM Programming6 Register

15	14	13	12	11	10	9	8
eeIndRData[15]	eeIndRData[14]	eeIndRData[13]	eeIndRData[12]	eeIndRData[11]	eeIndRData[10]	eeIndRData[9]	eeIndRData[8]
R-0	R-0	R-0	R-0	R-0	R-0	R-0	R-0
7	6	5	4	3	2	1	0
eeIndRData[7]	eeIndRData[6]	eeIndRData[5]	eeIndRData[4]	eeIndRData[3]	eeIndRData[2]	eeIndRData[1]	eeIndRData[0]
R-0	R-0	R-0	R-0	R-0	R-0	R-0	R-0

表 8-27. EEPROM Programming6 Register Field Descriptions

Bit	Field	Type	Reset	Description
15:0	eeIndRData[15:0]	R	0x00	EEPROM Individual Access Read Data Contents of this register reflect the value of EEPROM location accessed through the individual read.

8.5.3.19 Unused Registers (addresses = 0x37 Through 0x5F)

Registers 0x37 through 0x5F are not used.

8.5.3.20 EECTRL Register (address = 0x60) [reset = 0x00]

图 8-57. EECTRL Register

15	14	13	12	11	10	9	8
MTR_DIS	Reserved	Reserved	Reserved	Reserved	Reserved	Reserved	Reserved
W-0	R-0	R-0	R-0	R-0	R-0	R-0	R-0
7	6	5	4	3	2	1	0
Reserved	Reserved	Reserved	Reserved	Reserved	Reserved	Reserved	Reserved
R-0	R-0	R-0	R-0	R-0	R-0	R-0	R-0

表 8-28. EECTRL Register Field Descriptions

Bit	Field	Type	Reset	Description
15	MTR_DIS	W	0	Control to disable motor without going to sleep. For use during EEPROM programming. This bit is write-only (cannot be read). 0: Motor control is enabled. 1: Motor control is disabled.
14:0	Reserved	R	0x00	Do not access these bits.

8.5.3.21 Unused Registers (addresses = 0x61 Through 0x8F)

Registers 0x61 through 0x8F are not used.

Copyright © 2023 Texas Instruments Incorporated

8.5.3.22 CONFIG1 Register (address = 0x90) [reset = 0x00]

图 8-58. CONFIG1 Register

15	14	13	12	11	10	9	8
SSMConfig[1]	SSMConfig[0]	FGOLSel[1]	FGOLSel[0]	FGCycle[3]	FGCycle[2]	FGCycle[1]	FGCycle[0]
R/W-0	R/W-0	R/W-0	R/W-0	R/W-0	R/W-0	R/W-0	R/W-0
7	6	5	4	3	2	1	0
ClkCycleAdjust	RMShift[2]	RMShift[1]	RMShift[0]	RMValue[3]	RMValue[2]	RMValue[1]	RMValue[0]
R/W-0	R/W-0	R/W-0	R/W-0	R/W-0	R/W-0	R/W-0	R/W-0

表 8-29. CONFIG1 Register Field Descriptions

Bit	Field	Type	Reset	Description
15:14	SSMConfig[1:0]	R/W	00	Spread spectrum modulation control 00: No spread spectrum 01: ±5% dithering 1:0: ±10% dithering 11: ±15% dithering
13:12	FGOLSel[1:0]	R/W	00	FG open-loop output select 00: FG outputs in both open loop and closed loop 01: FG outputs only in closed loop after approximately 280ms of delay 10: FG outputs closed loop and the first open loop 11: Reserved
11:8	FGCycle[3:0]	R/W	0x0	FG motor pole option n: FG output is electrical speed / (n + 1) 0: FG / 1 (2 pole) 1: FG / 2 (4 pole) 2: FG / 3 (6 pole) 3: FG / 4 (8 pole) ... 15: FG / 16 (32 pole)
7	ClkCycleAdjust	R/W	0	0: Full-cycle adjust 1: Half-cycle adjust
6:4	RMShift[2:0]	R/W	000	Number of shift bits to determine the motor phase resistance. R_{PH_CT} = RmValue << RmShift R_{PH_CT}' = (bin) {RPhase / 0.009615} After calculating R_{PH_CT}' value, split the value with shift number and significant number according the length of the R_{PH_CT}' value. If the length of R_{PH_CT}' is within 4 bits; RmValue[3:0] = R_{PH_CT}'; RmShift[2:0] = 000 If the length of R_{PH_CT}' is 5 bits; RmValue[3:0] = R_{PH_CT}'[4:1]; RmShift[2:0] = 001 and so on.
3:0	RMValue[3:0]	R/W	0x0	Significant portion of the motor resistor, used in conjunction with RmShift[2:0]

8.5.3.23 CONFIG2 Register (address = 0x91) [reset = 0x00]

图 8-59. CONFIG2 Register

15	14	13	12	11	10	9	8
Reserved	KtShift[2]	KtShift[1]	KtShift[0]	KtValue[3]	KtValue[2]	KtValue[1]	KtValue[0]
R-0	R/W-0	R/W-0	R/W-0	R/W-0	R/W-0	R/W-0	R/W-0
7	6	5	4	3	2	1	0
CommAdvMode	TCtrlAdvShift[2]	TCtrlAdvShift[1]	TCtrlAdvShift[0]				
R/W-0	R/W-0	R/W-0	R/W-0	R-0	R-0	R-0	R-0

Copyright © 2023 Texas Instruments Incorporated

表 8-30. CONFIG2 Register Field Descriptions

Bit	Field	Type	Reset	Description
15	Reserved	R	0	Do not access this bit
14:12	KtShift[2:0]	R/W	000	Number of shift bits to determine the motor BEMF constant. Kt = KtValue << KtShift
11:8	KtValue[3:0]	R/W	0x0	
7	CommAdvMode	R/W	0	Commutation advance mode 0: Voltage advance is maintained at a fixed time(4) relative to the estimated BEMF. 1: Voltage advance is maintained at a variable time relative to the estimated BEMF based on: $t_{adv} = t_{setting} \times (U\text{-}BEMF) / U$
6:4	TCtrlAdvShift[2:0]	R/W	000	Number of shift bits to determine the commutation advance timing t_{adv} = TCtrlAdvValue << TCtrlAdvShift
3:0	TCtrlAdvValue[3:0]	R/W	0x0	Commutation advance value.

8.5.3.24 CONFIG3 Register (address = 0x92) [reset = 0x00]

图 8-60. CONFIG3 Register

15	14	13	12	11	10	9	8
ISDThr[1]	ISDThr[0]	BrkCurThrSel	BEMF_HYS	ISDEn	RvsDrEn	RvsDrThr[1]	RvsDrThr[0]
R/W-0	R/W-0	R/W-0	R/W-0	R/W-0	R/W-0	R/W-0	R/W-0
7	6	5	4	3	2	1	0
OpenLCurr[1]	OpenLCurr[0]	OpLCurrRt[2]	OpLCurrRt[1]	OpLCurrRt[0]	BrkDoneThr[2]	BrkDoneThr[1]	BrkDoneThr[0]
R/W-0	R/W-0	R/W-0	R/W-0	R/W-0	R/W-0	R/W-0	R/W-0

表 8-31. CONFIG3 Register Field Descriptions

Bit	Field	Type	Reset	Description
15:14	ISDThr[1:0]	R/W	00	ISD stationary judgment threshold 00: 6 Hz (80 ms, no zero cross) 01: 3 Hz (160 ms, no zero cross) 10: 1.6 Hz (320 ms, no zero cross) 11: 0.8 Hz (640 ms, no zero cross)
13	BrkCurThrSel	R/W	0	Brake current-level-threshold selection. 0: 24 mA 1: 48 mA
12	BEMF_HYS	R/W	0	0: Low hysteresis for BEMF comparator (approximately 20 mV) 1: High hysteresis for BEMF comparator (approximately 40 mV)
11	ISDEn	R/W	0	0: Initial speed detect (ISD) disabled 1: ISD enabled
10	RvsDrEn	R/W	0	0: Reverse drive disabled 1: Reverse drive enabled
9:8	RvsDrThr[1:0]	R/W	00	The threshold where device starts to process revers drive (RvsDr) or brake. 00: 6.3 Hz 01: 13 Hz 10: 26 Hz 11: 51 Hz

Copyright © 2023 Texas Instruments Incorporated

表 8-31. CONFIG3 Register Field Descriptions (continued)

Bit	Field	Type	Reset	Description
7:6	OpenLCurr[1:0]	R/W	00	Open-loop current setting. 00: 0.2 A 01: 0.4 A 10: 0.8 A 11: 1.6 A Align current setting. 00: 0.15 A 01: 0.3 A 10: 0.6 A 11: 1.2 A
5:3	OpLCurrRt[2:0]	R/W	000	Open-loop current ramp-up setting. 000: 6 V_{CC}/s 001: 3 V_{CC}/s 010: 1.5 V_{CC}/s 011: 0.7 V_{CC}/s 100: 0.34 V_{CC}/s 101: 0.16 V_{CC}/s 110: 0.07 V_{CC}/s 111: 0.023 V_{CC}/s
2:0	BrkDoneThr[2:0]	R/W	000	Braking mode setting. 000: No brake (BrkEn = 0) 001: 2.7 s 010: 1.3 s 011: 0.67 s 100: 0.33 s 101: 0.16 s 110: 0.08 s 111: 0.04 s

8.5.3.25 CONFIG4 Register (address = 0x93) [reset = 0x00]

图 8-61. CONFIG4 Register

15	14	13	12	11	10	9	8
Reserved	AccelRangeSel	StAccel2[2]	StAccel2[1]	StAccel2[0]	StAccel[2]	StAccel[1]	StAccel[0]
R-0	R/W-0	R/W-0	R/W-0	R/W-0	R/W-0	R/W-0	R/W-0
7	6	5	4	3	2	1	0
Op2ClsThr[4]	Op2ClsThr[3]	Op2ClsThr[2]	Op2ClsThr[1]	Op2ClsThr[0]	AlignTime[2]	AlignTime[1]	AlignTime[0]
R/W-0	R/W-0	R/W-0	R/W-0	R/W-0	R/W-0	R/W-0	R/W-0

Copyright © 2023 Texas Instruments Incorporated

表 8-32. CONFIG4 Register Field Descriptions

Bit	Field	Type	Reset	Description
15	Reserved	R	0	Do not access this bit
14	AccelRangeSel	R/W	0	Acceleration range selection 0: Fast 1: Slow
13:11	StAccel2[2:0]	R/W	000	Open-loop start-up acceleration (second-order) AccelRangeSel = 0; 000: 57 Hz/s^2 AccelRangeSel = 0; 001 = 29 Hz/s^2 AccelRangeSel = 0; 010 = 14 Hz/s^2 AccelRangeSel = 0; 011 = 6.9 Hz/s^2 AccelRangeSel = 0; 100 = 3.3 Hz/s^2 AccelRangeSel = 0; 101 = 1.6 Hz/s^2 AccelRangeSel = 0; 110 = 0.66 Hz/s^2 AccelRangeSel = 0; 111 = 0 Hz/s^2 AccelRangeSel = 1; 000 = 0.22 Hz/s^2 AccelRangeSel = 1; 001 = 0.11 Hz/s^2 AccelRangeSel = 1; 010 = 0.055 Hz/s^2 AccelRangeSel = 1; 011 = 0.027 Hz/s^2 AccelRangeSel = 1; 100 = 0.013 Hz/s^2 AccelRangeSel = 1; 101 = 0.0063 Hz/s^2 AccelRangeSel = 1; 110 = 0.0026 Hz/s^2 AccelRangeSel = 1; 111 = 0 Hz/s^2
10:8	StAccel[2:0]	R/W	0	Open-loop start-up acceleration (first-order) AccelRangeSel = 0; 000 = 76 Hz/s AccelRangeSel = 0; 001 = 38 Hz/s AccelRangeSel = 0; 010 = 19 Hz/s AccelRangeSel = 0; 011 = 9.2 Hz/s AccelRangeSel = 0; 100 = 4.5 Hz/s AccelRangeSel = 0; 101 = 2.1 Hz/s AccelRangeSel = 0; 110 = 0.9 Hz/s AccelRangeSel = 0; 111 = 0.3 Hz/s AccelRangeSel = 1; 000 = 4.8 Hz/s AccelRangeSel = 1; 001 = 2.4 Hz/s AccelRangeSel = 1; 010 = 1.2 Hz/s AccelRangeSel = 1; 011 = 0.58 Hz/s AccelRangeSel = 1; 100 = 0.28 Hz/s AccelRangeSel = 1; 101 = 0.13 Hz/s AccelRangeSel = 1; 110 = 0.056 Hz/s AccelRangeSel = 1; 111 = 0.019 Hz/s
7:3	Op2ClsThr[4:0]	R/W	0	Open- to closed-loop threshold 0 xxxx = Range 0: n × 0.8 Hz 0 0000 = N/A 0 0001 = 0.8 Hz 0 0111 = 5.6 Hz 0 1111 = 12 Hz 1 xxxx = Range 1: 12.8 × (n-16)+11.9 Hz 1 0000 = 11.9 Hz 1 0001 = 24.7 Hz ... 1 0111 = 101.5 Hz 1 1111 = 203.9 Hz
2:0	AlignTime[2:0]	R/W	0	Align time. 000 = 5.3 s 001 = 2.7 s 010 = 1.3 s 011 = 0.67 s 100 = 0.33 s 101 = 0.16 s 110 = 0.08 s 111 = 0.04 s

Copyright © 2023 Texas Instruments Incorporated

8.5.3.26 CONFIG5 Register (address = 0x94) [reset = 0x00]

图 8-62. CONFIG5 Register

15	14	13	12	11	10	9	8
OTWarning Limit[1]	OTWarning Limit[0]	LockEn5	LockEn4	LockEn3	LockEn2	LockEn1	LockEn0
R/W-0	R/W-0	R/W-0	R/W-0	R/W-0	R/W-0	R/W-0	R/W-0
7	6	5	4	3	2	1	0
SWiLimitThr [3]	SWiLimitThr [2]	SWiLimitThr [1]	SWiLimitThr [0]	HWiLimitThr [2]	HWiLimitThr [1]	HWiLimitThr [0]	IPDasHwILimit
R/W-0	R/W-0	R/W-0	R/W-0	R/W-0	R/W-0	R/W-0	R/W-0

表 8-33. CONFIG5 Register Field Descriptions

Bit	Field	Type	Reset	Description
15:14	OTWarningLimit[1:0]	R/W	00	Overtemperature warning current limit 00: No temperature-based current-limit function, uses SWILimitThr 01: Limit current to 1 A when overtemperature warning reached 10: Limit current to 1.6 A when overtemperature warning reached 11: Limit current to 2 A when overtemperature warning reached
13	LockEn5	R/W	0	Stuck in closed loop (no zero cross detected). Enabled when high
12	LockEn4	R/W	0	Open loop stuck (no zero cross detected). Enabled when high
11	LockEn3	R/W	0	No motor fault. Enabled when high
10	LockEn2	R/W	0	Abnormal Kt. Enabled when high
9	LockEn1	R/W	0	Abnormal speed. Enabled when high
8	LockEn0	R/W	0	Lock-detection current limit. Enabled when high.
7:4	SWiLimitThr[3:0]	R/W	0x0	Acceleration current limit threshold 0000: No acceleration current limit 0001: 0.2-A current limit 0010 to 1111: n × 0.2 A current limit

3:1	HWiLimitThr[2:0]	R/W	000	HWILimitThr: Current limit for lock detection
				If IPDasHwILimit = 0 then
				x00: 2.5 A
				x01: 1.9 A
				x10: 1.5 A
				x11: 0.9 A
				If IPDasHwILimit = 1 then
				000: 0.4 A
				001: 0.8 A
				010: 1.2 A
				011: 1.6 A
				100: 2 A
				101: 2.4 A
				110: 2.8 A
				111: 3.2 A

0	IPDasHwILimit	R/W	0	0: Range1 of current limit for lock detection 1: Range2 of current limit for lock detection

Copyright © 2023 Texas Instruments Incorporated

8.5.3.27 CONFIG6 Register (address = 0x95) [reset = 0x00]

图 8-63. CONFIG6 Register

15	14	13	12	11	10	9	8
SpdCtrlMd	PWMFreq	KtLckThr[1]	KtLckThr[0]	AVSIndEn	AVSMEn	AVSMMd	IPDRlsMd
R/W-0	R/W-0	R/W-0	R/W-0	R/W-0	R/W-0	R/W-0	R/W-0
7	6	5	4	3	2	1	0
CLoopDis	ClsLpAccel[2]	ClsLpAccel[1]	ClsLpAccel[0]	DutyCycleLimit[1]	DutyCycleLimit[0]	SlewRate[1]	SlewRate[0]
R/W-0	R/W-0	R/W-0	R/W-0	R/W-0	R/W-0	R/W-0	R/W-0

表 8-34. CONFIG6 Register Field Descriptions

Bit	Field	Type	Reset	Description
15	SpdCtrlMd	R/W	0	Speed input mode 0: Analog input expected at SPEED pin 1: PWM input expected at SPEED pin
14	PWMFreq	R/W	0	PWM Frequency Control 0: PWM frequency = 25 kHz 1: PWM frequency = 50 kHz
13:12	KtLckThr[1:0]	R/W	0	Abnormal Kt lock detect threshold 00: Kt_high = 3/2Kt. Kt_low = 3/4Kt 01: Kt_high = 2Kt. Kt_low = 3/4Kt 10: Kt_high = 3/2Kt. Kt_low = 1/2Kt 11: Kt_high = 2Kt. Kt_low = 1/2Kt
11	AVSIndEn	R/W	0	Inductive AVS enable. Enabled when high
10	AVSMEn	R/W	0	Mechanical AVS enable. Enabled when high
9	AVSMMd	R/W	0	Mechanical AVS mode 0: AVS to V_{CC} 1: AVS to 24 V
8	IPDRlsMd	R/W	0	IPD release mode 0: Brake when inductive release 1: Hi-z when inductive release
7	CLoopDis	R/W	0	0: Transfer to closed loop at Op2ClsThr speed 1: No transfer to closed loop. Keep in open loop
6:4	ClsLpAccel[2:0]	R/W	0	Closed-loop accelerate 000: Immediate change 001: 48 V_{CC}/s 010: 48 V_{CC}/s 011: 0.77 V_{CC}/s 100: 0.37 V_{CC}/s 101: 0.19 V_{CC}/s 110: 0.091 V_{CC}/s 111: 0.045 V_{CC}/s
3:2	DutyCycleLimit[1:0]	R/W	0	Minimum duty-cycle limit 00: Linear down to 5%, then holds at 5% until duty command is 1.5 %; 0 % for duty command below 1.5 %. 01: Linear down to 10%, then holds at 10% until duty command is 1.5 %; 0 % for duty command below 1.5 %. 10: Linear down to 5%, then holds at 5% until duty command is 1.5 %; 100 % for duty command below 1.5 %. 11: Linear down to 10%, then holds at 10% until duty command is 1.5 %; 100 % for duty command below 1.5 %.
1:0	SlewRate[1:0]	R/W	0	Slew-rate control for phase node 00: Typical slew rate for V_{CC} at 12 V = 35 V/ µ s 01: Typical slew rate for V_{CC} at 12 V = 50 V/ µ s 10: Typical slew rate for V_{CC} at 12 V = 80 V/ µ s 11: Typical slew rate for V_{CC} at 12 V = 120 V/ µ s

Copyright © 2023 Texas Instruments Incorporated

8.5.3.28 CONFIG7 Register (address = 0x96) [reset = 0x00]

图 8-64. CONFIG7 Register

15	14	13	12	11	10	9	8
IPDAdvcAg[1]	IPDAdvcAg[0]	IPDCurrThr[3]	IPDCurrThr[2]	IPDCurrThr[1]	IPDCurrThr[0]	IPDClk[1]	IPDClk[0]
R/W-0	R/W-0	R/W-0	R/W-0	R/W-0	R/W-0	R/W-0	R/W-0
7	6	5	4	3	2	1	0
Reserved	CtrlCoef[1]	CtrlCoef[0]	DeadTime[4]	DeadTime[3]	DeadTime[2]	DeadTime[1]	DeadTime[0]
R-0	R/W-0	R/W-0	R/W-0	R/W-0	R/W-0	R/W-0	R/W-0

表 8-35. CONFIG7 Register Field Descriptions

Bit	Field	Type	Reset	Description
15:14	IPDAdvcAg[1:0]	R/W	00	Advance angle after inductive sense. 00: 30 degrees 01: 60 degrees 10: 90 degrees 11: 120 degrees
13:10	IPDCurrThr[3:0]	R/W	0x0	IPD (inductive sense) current threshold 0000: No IPD function. Align and go 0001: 0.4-A current threshold. 0010 to 1111: 0.2 A × (n + 1) current threshold.
9:8	IPDClk[1:0]	R/W	00	Inductive sense clock 00: IPD clock 12 Hz; IPD measurement resolution = 2.56 µs 01: IPD clock = 24 Hz; IPD measurement resolution = 1.28 µs 10: IPD clock = 47 Hz; IPD measurement resolution = 0.64 µs 11: IPD clock = 95 Hz; IPD measurement resolution = 0.32 µs
7	Reserved	R	0	Do not access this bit.
6:5	CtrlCoef[1:0]	R/W	00	SCORE control constant 00: 0.25 01: 0.5 10: 0.75 11: 1
4:0	DeadTime[4:0]	R/W	0x0	Driver dead time (n + 1) × 40 ns 40 ns to 1.204 µs

Copyright © 2023 Texas Instruments Incorporated

9 Application and Implementation

备注

Information in the following applications sections is not part of the TI component specification, and TI does not warrant its accuracy or completeness. TI’s customers are responsible for determining suitability of components for their purposes. Customers should validate and test their design implementation to confirm system functionality.

9.1 Application Information

The DRV10982-Q1 device is used in sensorless 3-phase BLDC motor control. The driver provides a high-performance, high-reliability, flexible, and simple solution for appliance fan, pump, and HVAC applications. The following design shows a common application of the DRV10982-Q1 device.

9.2 Typical Application

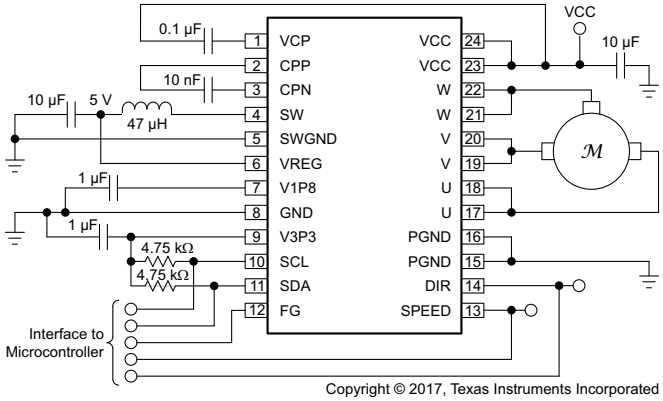

图 9-1. Typical Application Schematic

9.2.1 Design Requirements

表 9-1 provides design input parameters and motor parameters for system design.

表 9-1. Recommended Application Range

		MIN	TYP	MAX	UNIT
Motor voltage		6.2	12	28	V
BEMF constant	Phase to phase, measured while motor is coasting	0.001		1.8	V/Hz
Phase-Phase resistance	Measured ph-ph	0.6		38	Ω
Phase-Phase inductance	Measured ph-ph	0.7			mH
Operating closed loop speed	Electrical frequency	1		1000	Hz
Operating current	PGND, GND	0.1		2	A
Absolute maximum current	During start-up or locked condition			3	A

表 9-2. External Components

COMPONENT	PIN 1	PIN 2	RECOMMENDED
C_{VCC}	V_{CC}	GND	10-µF ceramic capacitor rated for V_{CC}
C_{VCP}	VCP	V_{CC}	0.1-µF ceramic capacitor rated for 10 V
C_{CP}	CPP	CPN	10-nF ceramic capacitor rated for V_{CC} × 2
$L_{SW-VREG}$	SW	VREG	47-µH ferrite inductor with 1.15-A current rating, 1.15-A saturation current, and DC resistance < 1-Ω (buck mode)
$R_{SW-VREG}$	SW	VREG	39-Ω series resistor rated for ¼ W (linear mode)
C_{VREG}	VREG	GND	10-µF ceramic capacitor rated for 10 V
C_{V1P8}	V1P8	GND	1-µF ceramic capacitor rated for 5 V
C_{V3P3}	V3P3	GND	1-µF ceramic capacitor rated for 5 V
R_{SCL}	SCL	V3P3	4.75-kΩ pullup to V3P3
R_{SDA}	SDA	V3P3	4.75-kΩ pullup to V3P3
R_{FG}	FG	V3P3	4.75-kΩ pullup to V3P3

9.2.2 Detailed Design Procedure

1. See the 节 9.2.1 section and make sure your system meets the recommended application range.
2. See the *DRV10983-Q1 Tuning Guide* and measure the motor parameters.
3. See the *DRV10983-Q1 Tuning Guide*. Configure the parameters using the DRV10983-Q1 GUI, and optimize the motor operation. The *Tuning Guide* takes the user through all the configurations step by step, including: start-up operation, closed-loop operation, current control, initial positioning, lock detection, and anti-voltage surge.
4. Build your hardware based on 节 11.1 .
5. Connect the device into a system and validate your system solution.

9.2.3 Application Curves

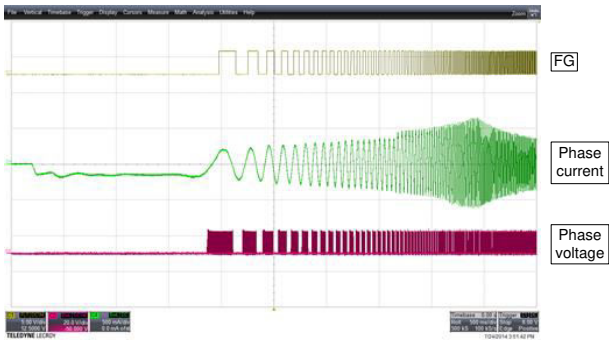

图 9-2. DRV10982-Q1 Start-Up Waveform

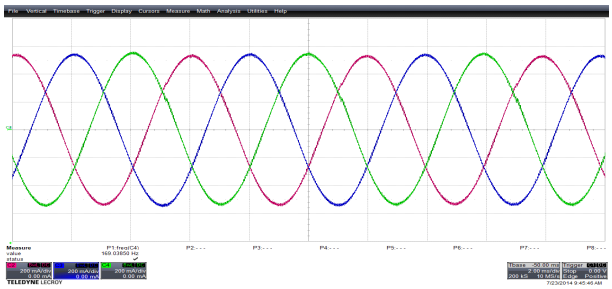

图 9-3. DRV10982-Q1 Operation Current Waveform

Copyright © 2023 Texas Instruments Incorporated

10 Power Supply Recommendations

The DRV10982-Q1 device is designed to operate from an input voltage supply, V_{CC}, in a range between 8 V and 28 V. The user must place a 10-µF ceramic capacitor rated for V_{CC} as close as possible to the V_{CC} and GND pins.

If the power supply ripple is more than 200 mV, in addition to the local decoupling capacitors, a bulk capacitance is required and must be sized according to the application requirements. If the bulk capacitance is implemented in the application, the user can reduce the value of the local ceramic capacitor to 1 µF.

Copyright © 2023 Texas Instruments Incorporated

11 Layout

11.1 Layout Guidelines

- Place the V_{CC}, GND, U, V, and W pins with thick traces because high current passes through these traces.
- Place the 10-µF capacitor between V_{CC} and GND, and as close to the V_{CC} and GND pins as possible.
- Place the capacitor between CPP and CPN, and as close to the CPP and CPN pins as possible.
- Connect the GND, PGND, and SWGND under the thermal pad.
- Keep the thermal pad connection as large as possible, on both the bottom side and top sides. It should be one piece of copper without any gaps.
- If EEPROM is programmed, it is okay to leave SCL and SDA floating.

11.2 Layout Example

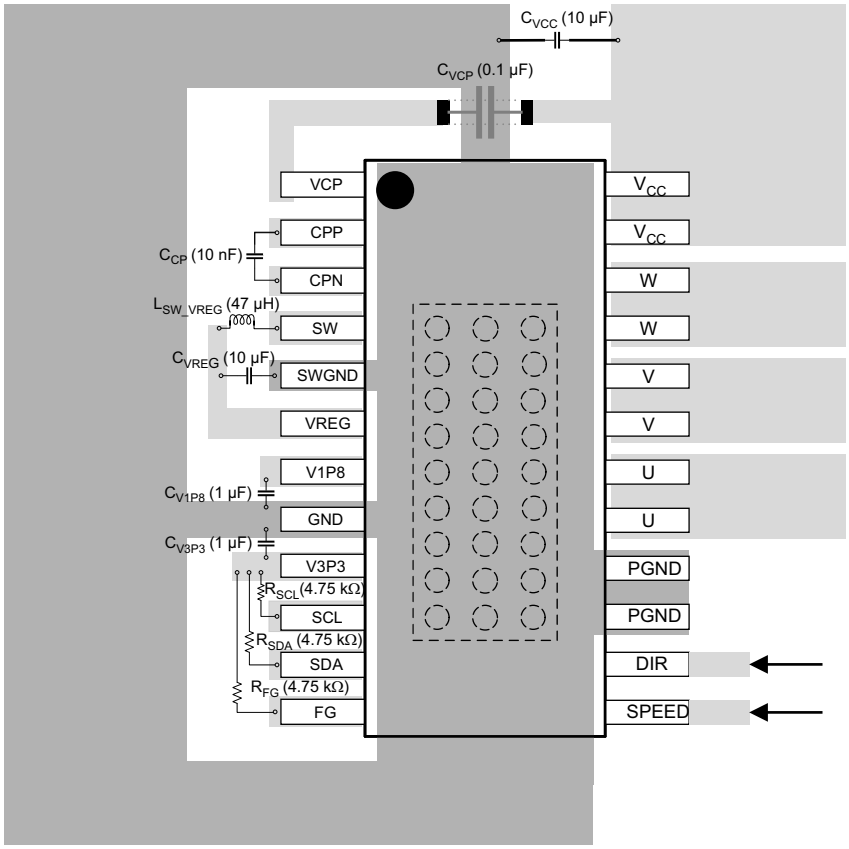

图 11-1. Layout Diagram

Copyright © 2023 Texas Instruments Incorporated

12 Device and Documentation Support

12.1 Trademarks

PowerPAD™ is a trademark of Texas Instruments.
所有商标均为其各自所有者的财产。

12.2 Receiving Notification of Documentation Updates

To receive notification of documentation updates, navigate to the device product folder on ti.com. In the upper right corner, click on *Alert me* to register and receive a weekly digest of any product information that has changed. For change details, review the revision history included in any revised document.

12.3 Community Resources

Copyright © 2023 Texas Instruments Incorporated

13 Mechanical, Packaging, and Orderable Information

The following pages include mechanical, packaging, and orderable information. This information is the most-current data available for the designated devices. This data is subject to change without notice and without revision of this document. For browser-based versions of this data sheet, see the left-hand navigation pane.

Copyright © 2023 Texas Instruments Incorporated

PACKAGE OUTLINE

PWP0024J



PowerPAD™ TSSOP - 1.2 mm max height

SMALL OUTLINE PACKAGE

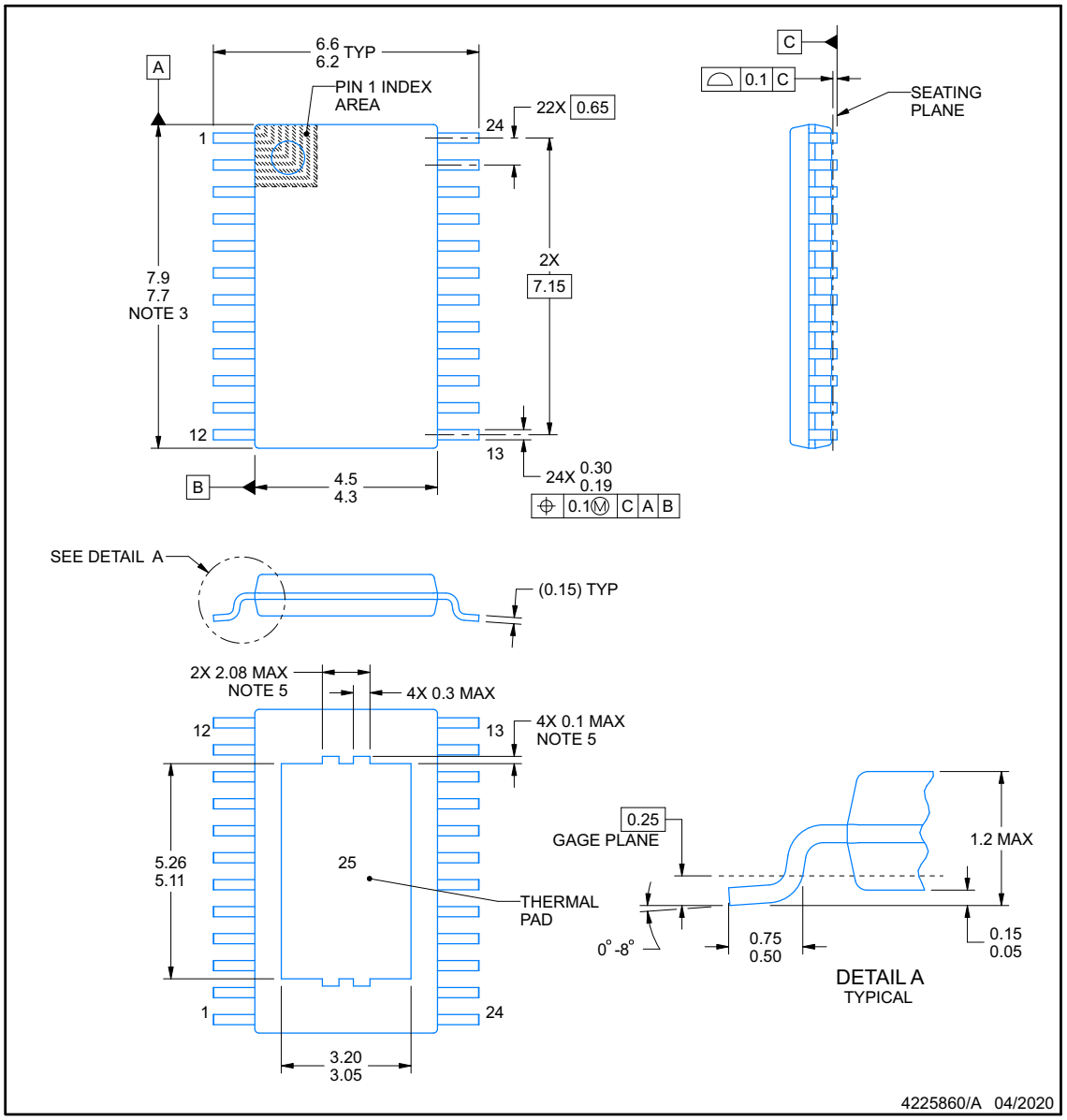

PowerPAD is a trademark of Texas Instruments.

NOTES:

1. All linear dimensions are in millimeters. Any dimensions in parenthesis are for reference only. Dimensioning and tolerancing per ASME Y14.5M.
2. This drawing is subject to change without notice.
3. This dimension does not include mold flash, protrusions, or gate burrs. Mold flash, protrusions, or gate burrs shall not exceed 0.15 mm per side.
4. Reference JEDEC registration MO-153.
5. Features may differ or may not be present.

Copyright © 2023 Texas Instruments Incorporated

EXAMPLE BOARD LAYOUT

PWP0024J

PowerPAD™ TSSOP - 1.2 mm max height

SMALL OUTLINE PACKAGE

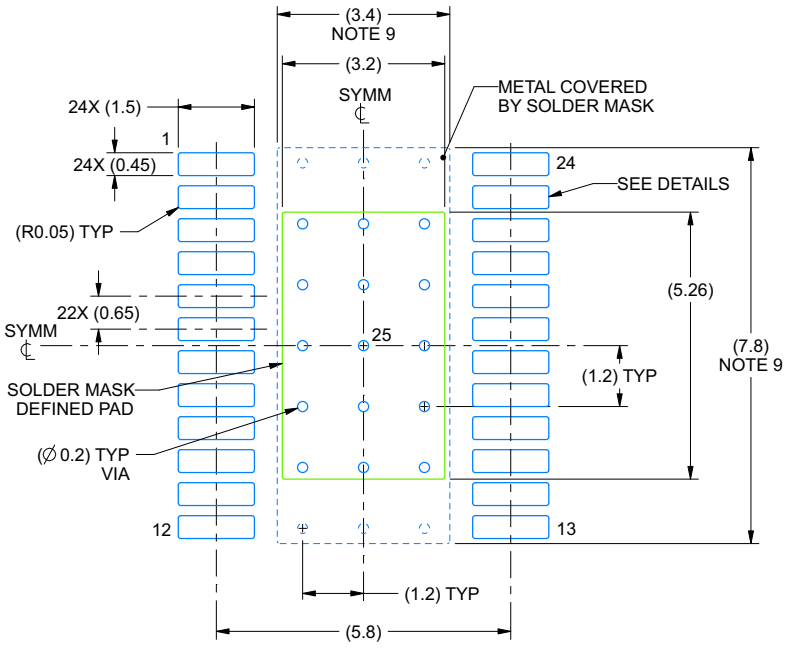

LAND PATTERN EXAMPLE
EXPOSED METAL SHOWN
SCALE: 8X

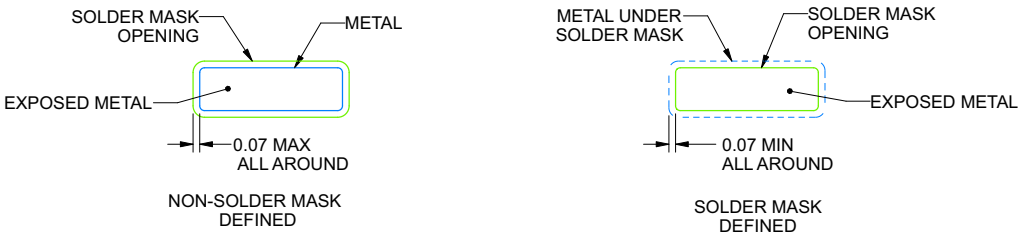

SOLDER MASK DETAILS

4225860/A 04/2020

NOTES: (continued)

6. Publication IPC-7351 may have alternate designs.
7. Solder mask tolerances between and around signal pads can vary based on board fabrication site.
8. This package is designed to be soldered to a thermal pad on the board. For more information, see Texas Instruments literature numbers SLMA002 (www.ti.com/lit/slma002) and SLMA004 (www.ti.com/lit/slma004).
9. Size of metal pad may vary due to creepage requirement.
10. Vias are optional depending on application, refer to device data sheet. It is recommended that vias under paste be filled, plugged or tented.

Copyright © 2023 Texas Instruments Incorporated

EXAMPLE STENCIL DESIGN

PWP0024J

PowerPAD™ TSSOP - 1.2 mm max height

SMALL OUTLINE PACKAGE

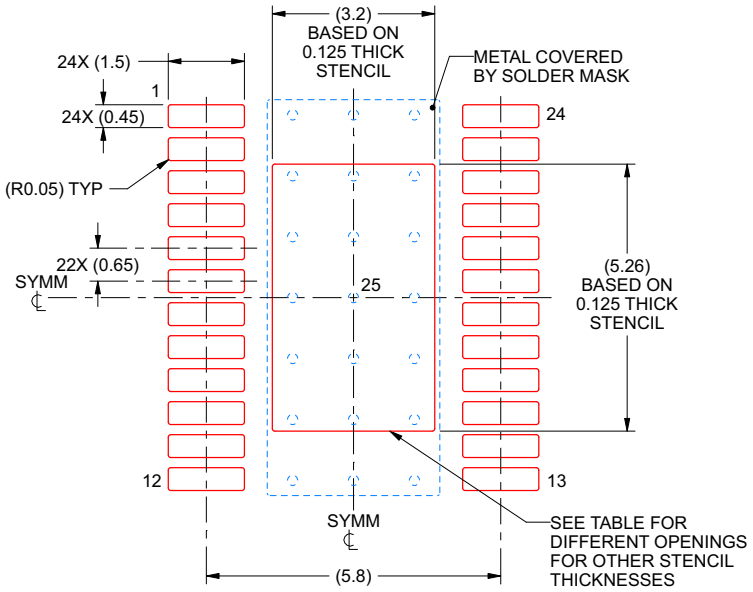

SOLDER PASTE EXAMPLE
BASED ON 0.125 mm THICK STENCIL
SCALE: 8X

STENCIL THICKNESS	SOLDER STENCIL OPENING
0.1	3.58 X 5.88
0.125	3.20 X 5.26 (SHOWN)
0.15	2.92 X 4.80
0.175	2.70 X 4.45

4225860/A 04/2020

NOTES: (continued)

11. Laser cutting apertures with trapezoidal walls and rounded corners may offer better paste release. IPC-7525 may have alternate design recommendations.
12. Board assembly site may have different recommendations for stencil design.

Copyright © 2023 Texas Instruments Incorporated

13.1 Package Option Addendum

Copyright © 2023 Texas Instruments Incorporated

13.1.1 Packaging Information

Orderable Device	Status (1)	Package Type	Package Drawing	Pins	Package Qty	Eco Plan (2)	Lead/Ball Finish(4)	MSL Peak Temp (3)	Op Temp (°C)	Device Marking(5) (6)
DRV10982SQPWPRQ1	ACTIVE	HTSSOP	PWP	24	2000	Green (RoHS & no Sb/Br)	NIPDAU	Level-3-260C-168 HR	-40 to 125	10982SQ1
DRV10982QPWPRQ1	ACTIVE	HTSSOP	PWP	24	2000	Green (RoHS & no Sb/Br)	NIPDAU	Level-3-260C-168 HR	-40 to 125	DRV10982Q

(1) The marketing status values are defined as follows:
ACTIVE: Product device recommended for new designs.
LIFEBUY: TI has announced that the device will be discontinued, and a lifetime-buy period is in effect.
NRND: Not recommended for new designs. Device is in production to support existing customers, but TI does not recommend using this part in a new design.
PRE_PROD Unannounced device, not in production, not available for mass market, nor on the web, samples not available.
PREVIEW: Device has been announced but is not in production. Samples may or may not be available.
OBSOLETE: TI has discontinued the production of the device.

(2) Eco Plan - The planned eco-friendly classification: Pb-Free (RoHS), Pb-Free (RoHS Exempt), or Green (RoHS & no Sb/Br) - please check http://www.ti.com/productcontent for the latest availability information and additional product content details.
TBD: The Pb-Free/Green conversion plan has not been defined.
Pb-Free (RoHS): TI's terms "Lead-Free" or "Pb-Free" mean semiconductor products that are compatible with the current RoHS requirements for all 6 substances, including the requirement that lead not exceed 0.1% by weight in homogeneous materials. Where designed to be soldered at high temperatures, TI Pb-Free products are suitable for use in specified lead-free processes.
Pb-Free (RoHS Exempt): This component has a RoHS exemption for either 1) lead-based flip-chip solder bumps used between the die and package, or 2) lead-based die adhesive used between the die and leadframe. The component is otherwise considered Pb-Free (RoHS compatible) as defined above.
Green (RoHS & no Sb/Br): TI defines "Green" to mean Pb-Free (RoHS compatible), and free of Bromine (Br) and Antimony (Sb) based flame retardants (Br or Sb do not exceed 0.1% by weight in homogeneous material)

(3) MSL, Peak Temp. -- The Moisture Sensitivity Level rating according to the JEDEC industry standard classifications, and peak solder temperature.

(4) Lead/Ball Finish - Orderable Devices may have multiple material finish options. Finish options are separated by a vertical ruled line. Lead/Ball Finish values may wrap to two lines if the finish value exceeds the maximum column width.

(5) There may be additional marking, which relates to the logo, the lot trace code information, or the environmental category on the device

(6) Multiple Device markings will be inside parentheses. Only one Device Marking contained in parentheses and separated by a "~" will appear on a device. If a line is indented then it is a continuation of the previous line and the two combined represent the entire Device Marking for that device.

Important Information and Disclaimer: The information provided on this page represents TI's knowledge and belief as of the date that it is provided. TI bases its knowledge and belief on information provided by third parties, and makes no representation or warranty as to the accuracy of such information. Efforts are underway to better integrate information from third parties. TI has taken and continues to take reasonable steps to provide representative and accurate information but may not have conducted destructive testing or chemical analysis on incoming materials and chemicals. TI and TI suppliers consider certain information to be proprietary, and thus CAS numbers and other limited information may not be available for release.

In no event shall TI's liability arising out of such information exceed the total purchase price of the TI part(s) at issue in this document sold by TI to Customer on an annual basis.

Copyright © 2023 Texas Instruments Incorporated

13.1.2 Tape and Reel Information

REEL DIMENSIONS

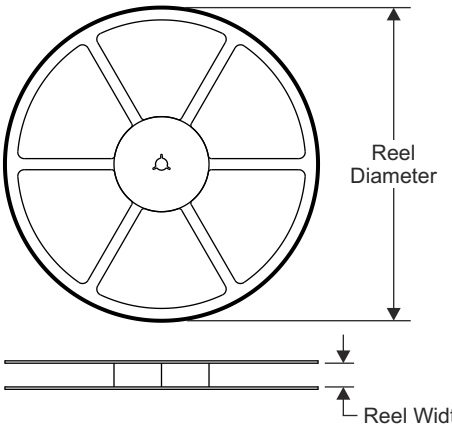

TAPE DIMENSIONS

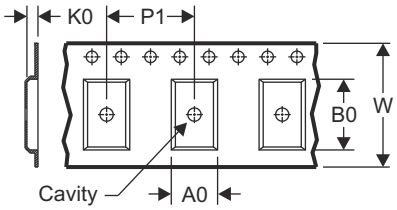

A0	Dimension designed to accommodate the component width
B0	Dimension designed to accommodate the component length
K0	Dimension designed to accommodate the component thickness
W	Overall width of the carrier tape
P1	Pitch between successive cavity centers

QUADRANT ASSIGNMENTS FOR PIN 1 ORIENTATION IN TAPE

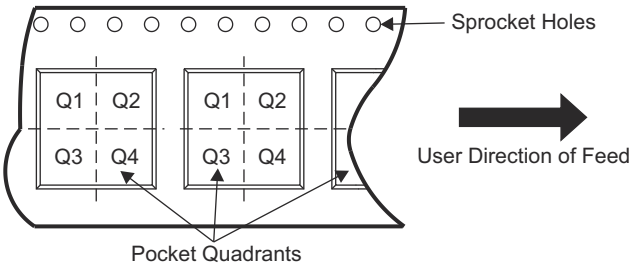

Device	Package Type	Package Drawing	Pins	SPQ	Reel Diameter (mm)	Reel Width W1 (mm)	A0 (mm)	B0 (mm)	K0 (mm)	P1 (mm)	W (mm)	Pin1 Quadrant
DRV10982SQPWPRQ1	HTSSOP	PWP	24	2000	330.0	16.4	6.95	8.3	1.6	8.0	16.0	Q1
DRV10982QPWPRQ1	HTSSOP	PWP	24	2000	330.0	16.4	6.95	8.3	1.6	8.0	16.0	Q1

Copyright © 2023 Texas Instruments Incorporated

TAPE AND REEL BOX DIMENSIONS

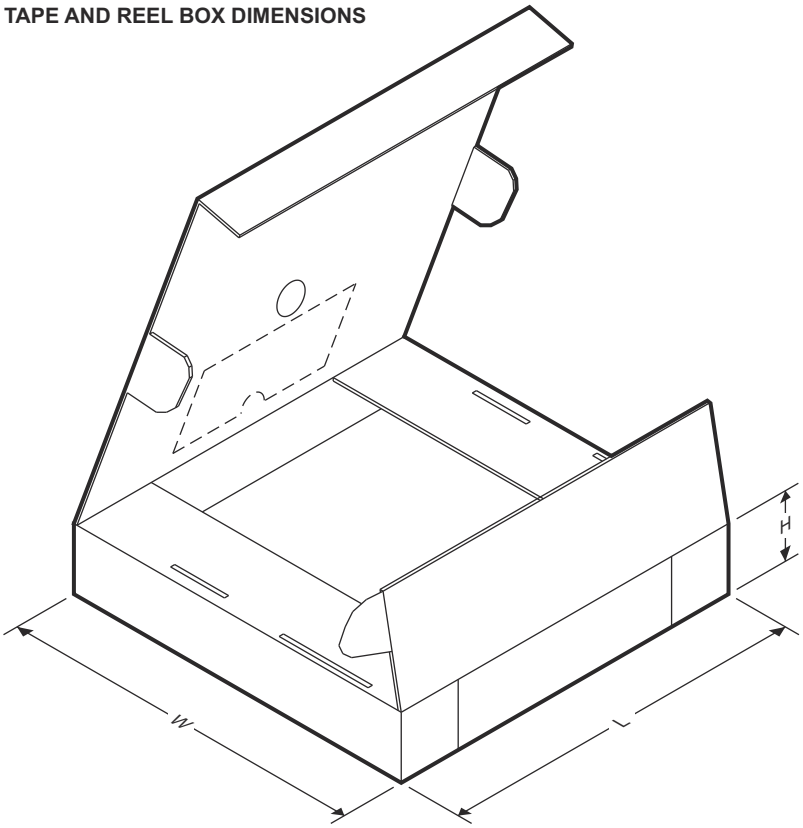

Device	Package Type	Package Drawing	Pins	SPQ	Length (mm)	Width (mm)	Height (mm)
DRV10982SQPWPRQ1	HTSSOP	PWP	24	2000	350.0	350.0	43.0
DRV10982QPWPRQ1	HTSSOP	PWP	24	2000	350.0	350.0	43.0

Copyright © 2023 Texas Instruments Incorporated

PACKAGING INFORMATION

Orderable part number	Status (1)	Material type (2)	Package | Pins	Package qty | Carrier	RoHS (3)	Lead finish/ Ball material (4)	MSL rating/ Peak reflow (5)	Op temp (°C)	Part marking (6)
DRV10982QPWPRQ1	Active	Production	HTSSOP (PWP) | 24	3000 | LARGE T&R	Yes	NIPDAU	Level-3-260C-168 HR	-40 to 125	DRV10982Q
DRV10982QPWPRQ1.A	Active	Production	HTSSOP (PWP) | 24	3000 | LARGE T&R	Yes	NIPDAU	Level-3-260C-168 HR	-40 to 125	DRV10982Q
DRV10982SQPWPRQ1	Active	Production	HTSSOP (PWP) | 24	3000 | LARGE T&R	Yes	NIPDAU	Level-3-260C-168 HR	-40 to 125	10982SQ1
DRV10982SQPWPRQ1.A	Active	Production	HTSSOP (PWP) | 24	3000 | LARGE T&R	Yes	NIPDAU	Level-3-260C-168 HR	-40 to 125	10982SQ1

(1) **Status:** For more details on status, see our product life cycle.

(2) **Material type:** When designated, preproduction parts are prototypes/experimental devices, and are not yet approved or released for full production. Testing and final process, including without limitation quality assurance, reliability performance testing, and/or process qualification, may not yet be complete, and this item is subject to further changes or possible discontinuation. If available for ordering, purchases will be subject to an additional waiver at checkout, and are intended for early internal evaluation purposes only. These items are sold without warranties of any kind.

(3) **RoHS values:** Yes, No, RoHS Exempt. See the TI RoHS Statement for additional information and value definition.

(4) **Lead finish/Ball material:** Parts may have multiple material finish options. Finish options are separated by a vertical ruled line. Lead finish/Ball material values may wrap to two lines if the finish value exceeds the maximum column width.

(5) **MSL rating/Peak reflow:** The moisture sensitivity level ratings and peak solder (reflow) temperatures. In the event that a part has multiple moisture sensitivity ratings, only the lowest level per JEDEC standards is shown. Refer to the shipping label for the actual reflow temperature that will be used to mount the part to the printed circuit board.

(6) **Part marking:** There may be an additional marking, which relates to the logo, the lot trace code information, or the environmental category of the part.

Multiple part markings will be inside parentheses. Only one part marking contained in parentheses and separated by a "~" will appear on a part. If a line is indented then it is a continuation of the previous line and the two combined represent the entire part marking for that device.

Important Information and Disclaimer: The information provided on this page represents TI's knowledge and belief as of the date that it is provided. TI bases its knowledge and belief on information provided by third parties, and makes no representation or warranty as to the accuracy of such information. Efforts are underway to better integrate information from third parties. TI has taken and continues to take reasonable steps to provide representative and accurate information but may not have conducted destructive testing or chemical analysis on incoming materials and chemicals. TI and TI suppliers consider certain information to be proprietary, and thus CAS numbers and other limited information may not be available for release.

In no event shall TI's liability arising out of such information exceed the total purchase price of the TI part(s) at issue in this document sold by TI to Customer on an annual basis.

GENERIC PACKAGE VIEW

PWP 24

PowerPAD™ TSSOP - 1.2 mm max height

4.4 x 7.6, 0.65 mm pitch

PLASTIC SMALL OUTLINE

This image is a representation of the package family, actual package may vary.
Refer to the product data sheet for package details.

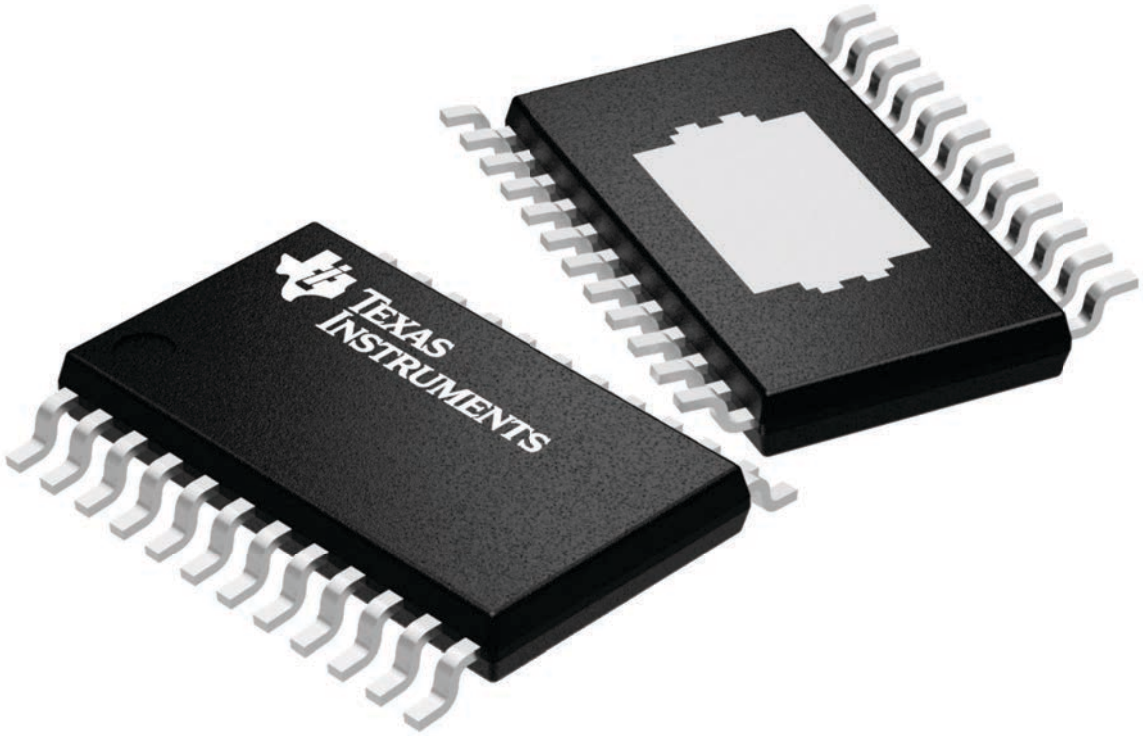

4224742/B

PACKAGE OUTLINE

PWP0024R

PowerPAD™ TSSOP - 1.2 mm max height

SMALL OUTLINE PACKAGE

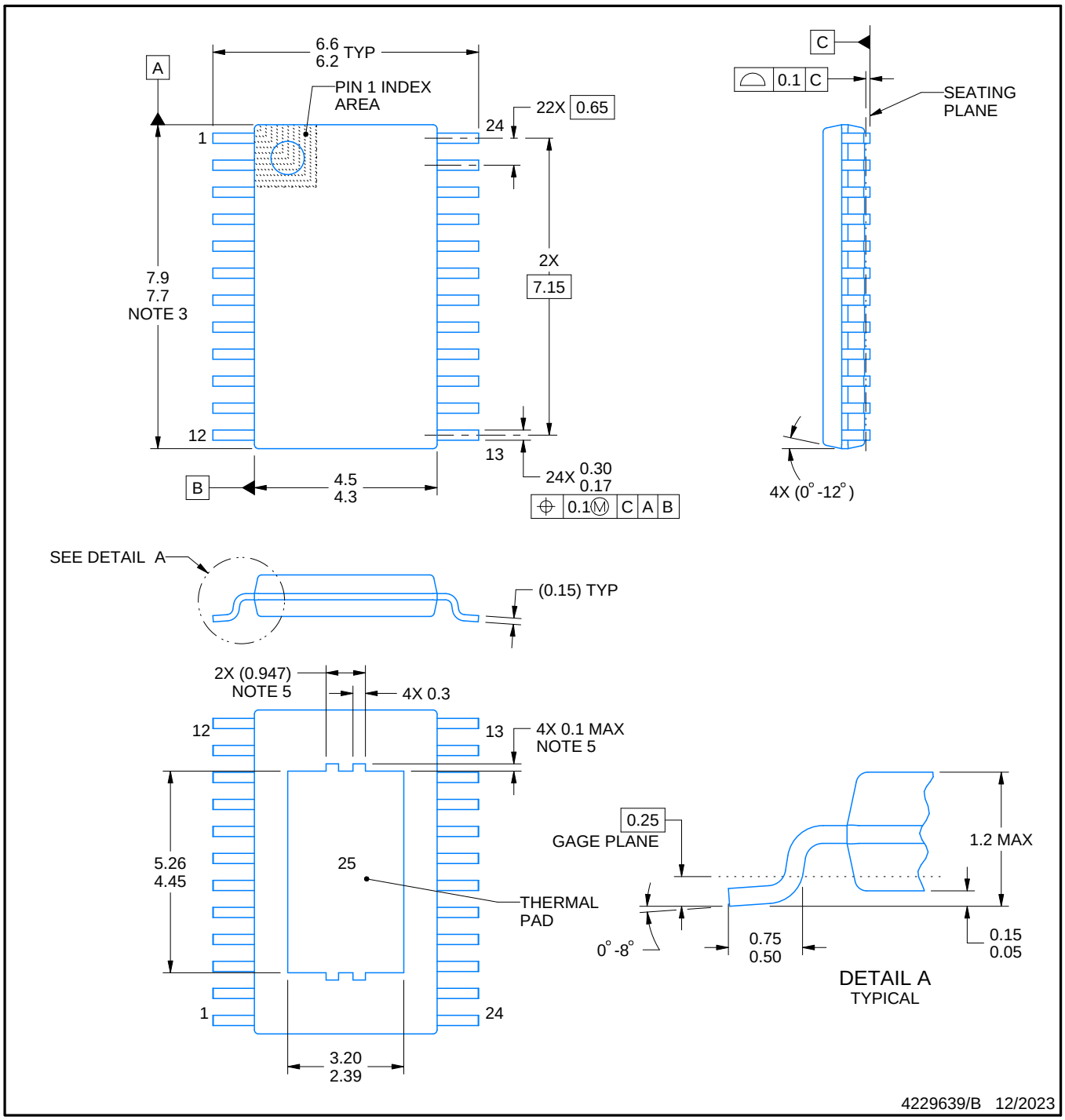

PowerPAD is a trademark of Texas Instruments.

NOTES:

1. All linear dimensions are in millimeters. Any dimensions in parenthesis are for reference only. Dimensioning and tolerancing per ASME Y14.5M.
2. This drawing is subject to change without notice.
3. This dimension does not include mold flash, protrusions, or gate burrs. Mold flash, protrusions, or gate burrs shall not exceed 0.15 mm per side.
4. Reference JEDEC registration MO-153.
5. Features may differ or may not be present.

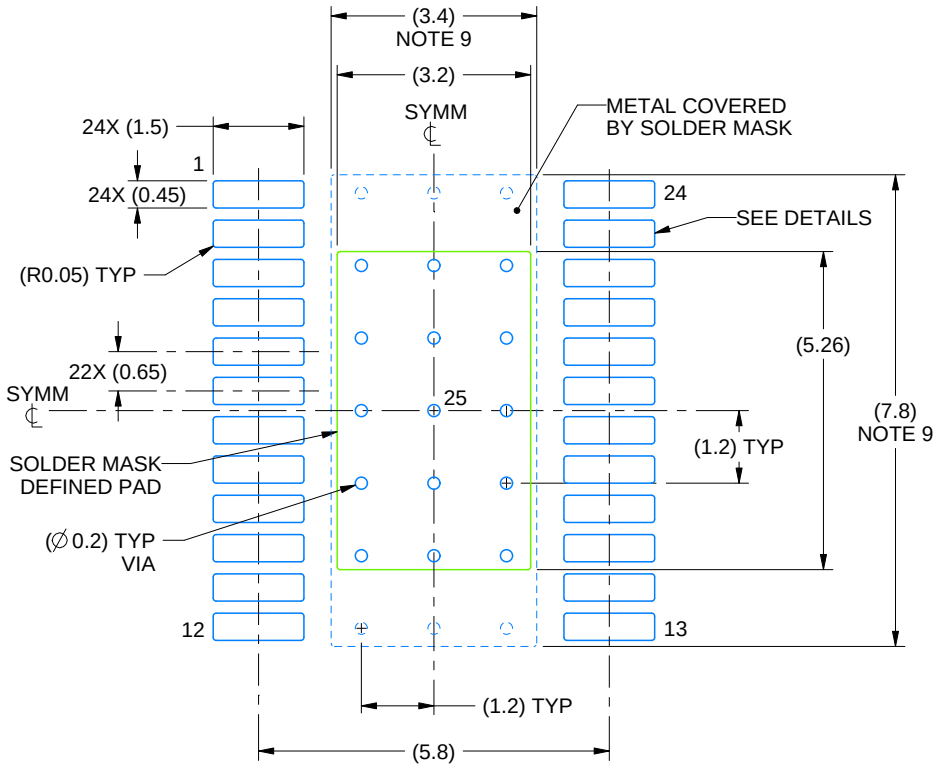

LAND PATTERN EXAMPLE
EXPOSED METAL SHOWN
SCALE: 8X

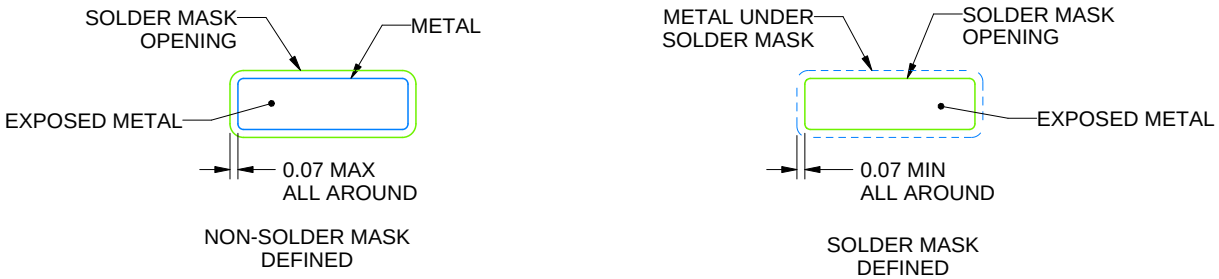

SOLDER MASK DETAILS

4229639/B 12/2023

NOTES: (continued)

6. Publication IPC-7351 may have alternate designs.
7. Solder mask tolerances between and around signal pads can vary based on board fabrication site.
8. This package is designed to be soldered to a thermal pad on the board. For more information, see Texas Instruments literature numbers SLMA002 (www.ti.com/lit/slma002) and SLMA004 (www.ti.com/lit/slma004).
9. Size of metal pad may vary due to creepage requirement.
10. Vias are optional depending on application, refer to device data sheet. It is recommended that vias under paste be filled, plugged or tented.

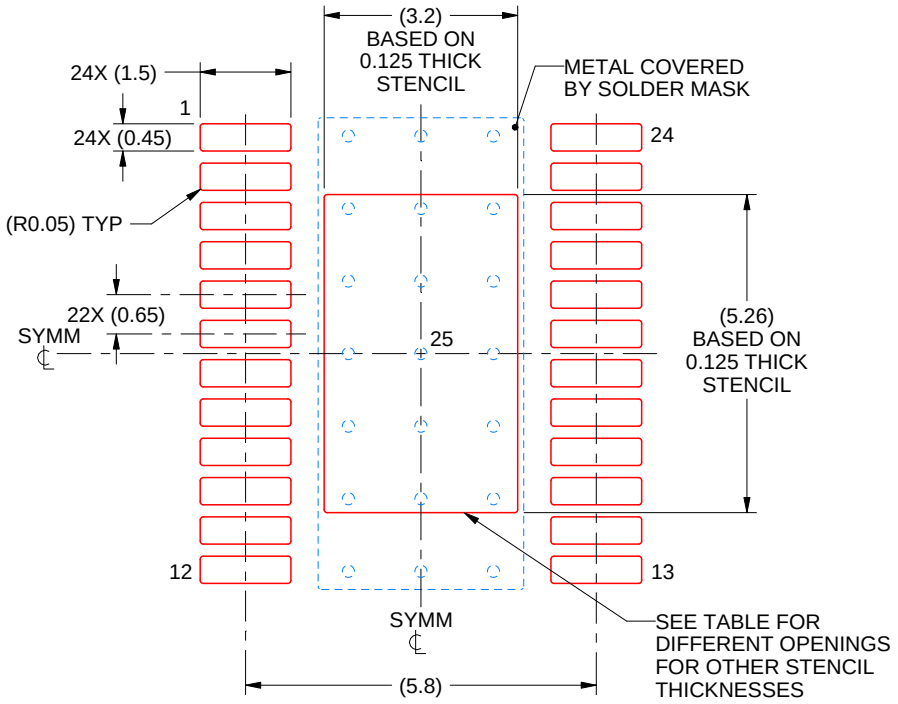

SOLDER PASTE EXAMPLE
BASED ON 0.125 mm THICK STENCIL
SCALE: 8X

STENCIL THICKNESS	SOLDER STENCIL OPENING
0.1	3.58 X 5.88
0.125	3.20 X 5.26 (SHOWN)
0.15	2.92 X 4.80
0.175	2.70 X 4.45

4229639/B 12/2023

NOTES: (continued)

11. Laser cutting apertures with trapezoidal walls and rounded corners may offer better paste release. IPC-7525 may have alternate design recommendations.
12. Board assembly site may have different recommendations for stencil design.

重要通知和免责声明

TI“按原样”提供技术和可靠性数据（包括数据表）、设计资源（包括参考设计）、应用或其他设计建议、网络工具、安全信息和其他资源，不保证没有瑕疵且不做出任何明示或暗示的担保，包括但不限于对适销性、与某特定用途的适用性或不侵犯任何第三方知识产权的暗示担保。

这些资源可供使用 TI 产品进行设计的熟练开发人员使用。您将自行承担以下全部责任：(1) 针对您的应用选择合适的 TI 产品，(2) 设计、验证并测试您的应用，(3) 确保您的应用满足相应标准以及任何其他安全、安保法规或其他要求。

这些资源如有变更，恕不另行通知。TI 授权您仅可将这些资源用于研发本资源所述的 TI 产品的相关应用。严禁以其他方式对这些资源进行复制或展示。您无权使用任何其他 TI 知识产权或任何第三方知识产权。对于因您对这些资源的使用而对 TI 及其代表造成的任何索赔、损害、成本、损失和债务，您将全额赔偿，TI 对此概不负责。

TI 提供的产品受 TI 销售条款)、TI 通用质量指南 或 ti.com 上其他适用条款或 TI 产品随附的其他适用条款的约束。TI 提供这些资源并不会扩展或以其他方式更改 TI 针对 TI 产品发布的适用的担保或担保免责声明。 除非德州仪器 (TI) 明确将某产品指定为定制产品或客户特定产品，否则其产品均为按确定价格收入目录的标准通用器件。

TI 反对并拒绝您可能提出的任何其他或不同的条款。

版权所有 © 2026，德州仪器 (TI) 公司

最后更新日期：2025 年 10 月