# ISL6398

Advanced Linear EAPP Digital 6-Phase Green PWM Controller for Digital Power Management with NVM and AUTO Phase Shedding

FN8575
Rev 1.00
Aug 13, 2015

The ISL6398 is a **smart** and **smallest** 6-Phase **Green** PWM controller, designed for networking, datacenter, and POL applications. It includes programmable functions and telemetries for easy use and system flexibility using SMBus, PMBus, or $I^2C$ interface, which is designed to program NVM banks up to 8 different compensations and system parameters. This **minimizes** external components and significantly reduces design complexity and PCB area, and **simplifies** the manufacturing process.

The ISL6398 utilizes Intersil's proprietary **Advanced Linear EAPP** (Enhanced Active Pulse Positioning) **Digital** control scheme to achieve the extremely fast linear transient response with fewer output capacitors and overcomes many hurdles of traditional digital approach, which uses non-linear, discrete control method for both voltage loop and current balance loop and runs into beat frequency oscillation and non-linear response. The ISL6398 accurately monitors the load current via the IMON pin and reports this information via the READ_IOUT register for power management. The ISL6398 features auto-phase shedding. In low power operation, the magnetic core and switching losses are significantly reduced with lower phase count operation, yielding high efficiency at light load. When APA is triggered, the dropped phase(s) are added back to sustain heavy load transient response and efficiency. It optimizes the efficiency from light to full load for **Greener Environment** without sacrificing the transient performance.

The ISL6398 senses the output current continuously by a dedicated current sense resistor or the DCR of the output inductor. The sensed current flows through a digitally programmable 1% droop resistor for precision load line control. Current sensing circuits also provide the needed signals for channel-current balancing, average overcurrent protection and individual phase current limiting. The TM pin senses an NTC thermistor's temperature, which is internally digitized for thermal monitoring and for integrated thermal compensation of the current sense elements of the regulator.

The ISL6398 features remote voltage sensing and completely eliminates any potential difference between remote and local grounds. This improves regulation and protection accuracy. The threshold-sensitive enable input is available to accurately coordinate the start-up of the ISL6398 with other voltage rails.

## Features

- SMBus/PMBus/$I^2C$ Compatible
  - Programmable IMAX, TMAX, BOOT, and address
  - Programmable soft-start rate and DVID rate
  - Up to 1.5MHz
  - NVM to store up to 8 Configurations with programmable frequency, droop, auto, faults (OCP, UVP, CFP), etc.
  - No firmware requirement and hassle
- **Advanced Linear EAPP Digital** control scheme (patented)
  - Digitally programmable compensation
  - Auto phase shedding option for greener environment
  - Variable frequency control during load transients to reduce beat frequency oscillation
  - Linear control with evenly distributed PWM pulses for better phase current balance during load transients
  - Voltage feed-forward and ramp adjustable options
  - High frequency compensation option
  - Active phase adding and dropping for enhanced light load efficiency
- Phase doubler and coupled-inductor compatibility
- Differential remote voltage sensing with ±0.5% accuracy
- Programmable minimum phase count operation
- Programmable slew rate of dynamic VID with dynamic VID compensation (DVC)
- Support 3-state 5V or 3.3V PWM DrMOS and driver
- Zero current shutdown with ISL6627
- Precision resistor or DCR differential current sensing
  - Accurate load-line (Droop) programming and control
  - Accurate current monitoring and channel-current balancing with calibration capability
- True input current sensing for catastrophic failure protection
- Average overcurrent protection and channel current limiting
- High common mode current sense input (VCC-1.5V)
- Open sensing and single point of loop failure protection
- Thermal monitoring and integrated compensation
- 1- to 6-Phase option and up to 2MHz per phase
- Start-up into precharged load
- Pb-free (RoHS Compliant)
- 40 Ld 5x5 Plastic Package

## Applications

- High efficiency and high density digital power
- High performance multi-phase POL and network
- Cloud Computing, Router, Data Center and Storage
- General processor power

# Table of Contents


**Ordering Information** . . . . . 3

**Driver Recommendation** . . . . . 4

**ISL6398 Internal Block Diagram** . . . . . 5

**Typical Application: 6-Phase VR with DrMOS and PMBus/SMBus/I²C** . . . . . 6

**Typical Application: 4-Phase VR with DrMOS and PMBus/SMBus/I²C** . . . . . 7

**Typical Application: 6-Phase VR for General Processor Power** . . . . . 8

**Typical Application: 12-Phase VR for Over-clocking Applications** . . . . . 9

**Absolute Maximum Ratings** . . . . . 10

**Thermal Information** . . . . . 10

**Recommended Operating Conditions** . . . . . 10

**Electrical Specifications** . . . . . 10

**Functional Pin Descriptions** . . . . . 14

**Operation** . . . . . 15

- Multiphase Power Conversion . . . . . 15
- Interleaving . . . . . 15
- PWM Modulation Scheme . . . . . 16
- PWM Operation . . . . . 17
- DrMOS and Driver Compatibility . . . . . 17
- Phase Doubler Compatibility . . . . . 17
- Precharged Start-up Capability . . . . . 17
- Switching Frequency . . . . . 17
- Current Sensing . . . . . 18
- $R_{SET}$ and L/DCR Matching for Coupled inductor . . . . . 19
- Channel-current Balance . . . . . 20
- Voltage Regulation (5mV and 10mV Mode) . . . . . 20
- Load-line Regulation . . . . . 23
- Dynamic VID . . . . . 24

**Operation Initialization** . . . . . 24

- Enable and Disable . . . . . 24
- Soft-start . . . . . 25
- Current Sense Output . . . . . 25

**Fault Monitoring and Protection** . . . . . 26

- VR_Ready Signal . . . . . 26
- Overvoltage Protection . . . . . 26
- Undervoltage Protection . . . . . 27
- Overcurrent Protection . . . . . 27
- Thermal Monitoring (VR_HOT#) . . . . . 27
- Temperature Compensation . . . . . 28
- Integrated Temperature Compensation . . . . . 29
- Design Procedure . . . . . 29
- Dynamic VID Compensation (DVC) . . . . . 30
- Programmable Compensation . . . . . 30
- Catastrophic Fault Protection . . . . . 30

**Input Current Sensing** . . . . . 30

**Auto-phase Shedding** . . . . . 31

**Resistor Reader (Patented)** . . . . . 32

**Memory Banks** . . . . . 33

**SMBus, PMBus and I²C Operation** . . . . . 35

**General Design Guide** . . . . . 49

- Power Stages . . . . . 49
- Current Sensing Resistor . . . . . 50
- Load-line Regulation Resistor . . . . . 51
- Output Filter Design . . . . . 51
- Switching Frequency Selection . . . . . 52
- Input Capacitor Selection . . . . . 52

**Layout and Design Considerations** . . . . . 53

- Pin Noise Sensitivity, Design and Layout Consideration . . . 53
- Component Placement . . . . . 55

**Powering Up And Open-Loop Test** . . . . . 55

**Voltage Regulator (VR) Design Materials** . . . . . 55

**Revision History** . . . . . 56

**About Intersil** . . . . . 56

**Package Outline Drawing** . . . . . 57

# Ordering Information

| PART NUMBER (Notes 1, 2, 3) | PART MARKING | TEMP. RANGE (°C) | PACKAGE (Pb-Free) | PKG. DWG. # |
|---|---|---|---|---|
| ISL6398HRTZ | ISL6398 HRTZ | -10 to +100 | 40 Ld 5x5 TQFN | L40.5x5 |
| ISL6398IRTZ | ISL6398 IRTZ | -40 to +85 | 40 Ld 5x5 TQFN | L40.5x5 |
| ISL6398EVAL1Z | 120A 3-Phase Evaluation Board with On Board Transient | | | |

NOTES:

1. Add "-T*" suffix for tape and reel. Please refer to TB347 for details on reel specifications
2. These Intersil Pb-free plastic packaged products employ special Pb-free material sets, molding compounds/die attach materials, and 100% matte tin plate plus anneal (e3 termination finish, which is RoHS compliant and compatible with both SnPb and Pb-free soldering operations). Intersil Pb-free products are MSL classified at Pb-free peak reflow temperatures that meet or exceed the Pb-free requirements of IPC/JEDEC J STD-020.
3. For Moisture Sensitivity Level (MSL), please see product information page for ISL6398. For more information on MSL please see techbrief TB363.

# Pin Configuration

ISL6398
(40 LD 5X5 TQFN)
TOP VIEW

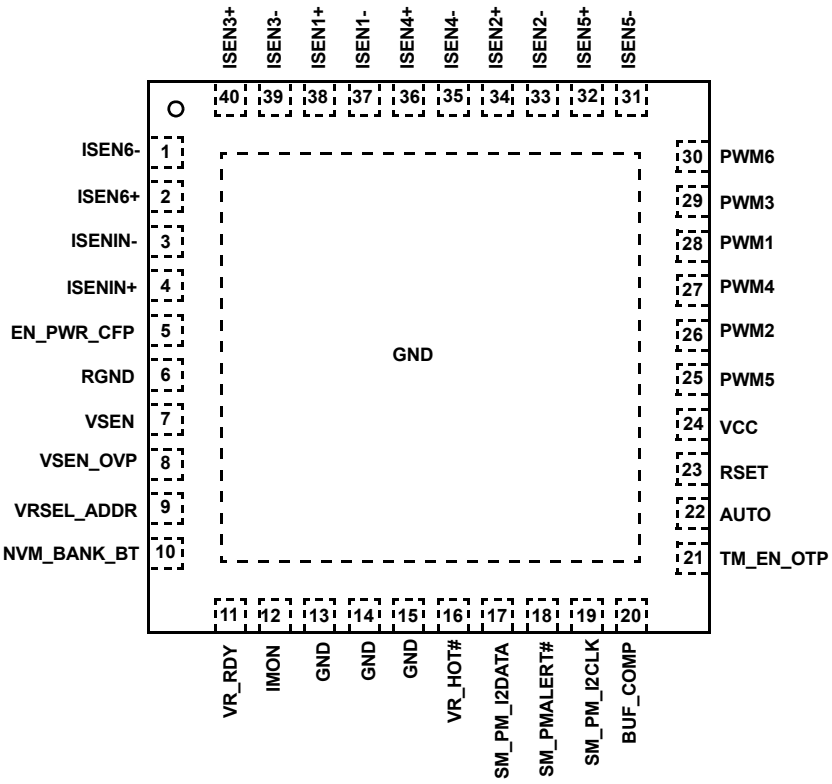

# Driver Recommendation

| DRIVER | QUIESCENT CURRENT (mA) | GATE DRIVE (V) | # OF DRIVERS | DIODE EMULATION (DE) | COMMENTS |
|---|---|---|---|---|---|
| ISL6627 | 1.0 | 5V | Single | Yes | For dropped phases or all channels with Diode Emulation (DE) for low stress shutdown or phase dropping. |
| ISL6596 | 0.19 | 5V | Single | No | For dropped phases or all channels without DE. |
| ISL6610<br>ISL6610A | 0.24 | 5V | Dual | No | For dropped phases or all channels without DE. |
| ISL6611A | 1.25 | 5V | Dual | No | Phase Doubler with Integrated Drivers, up to 12-Phase. For all channels with DE Disabled. |
| ISL6617 | 5.0 | N/A | N/A | No | PWM Doubler for DrMOS, up to 12- or 24-Phase. For all channels with DE Disabled. |
| ISL99140 | 0.47 | 5V | Single | Yes | DrMOS with 40A current capability. ISL99140's diode emulation is not compatible with ISL6398. Both DrMOS and ISL6398 should disable their diode emulation operation. |

NOTE: Intersil 5V and 12V drivers are mostly pin-to-pin compatible and allow for dual footprint layout implementation to optimize MOSFET selection and efficiency. The 5V Drivers are more suitable for high frequency and high power density applications.

# ISL6398 Internal Block Diagram

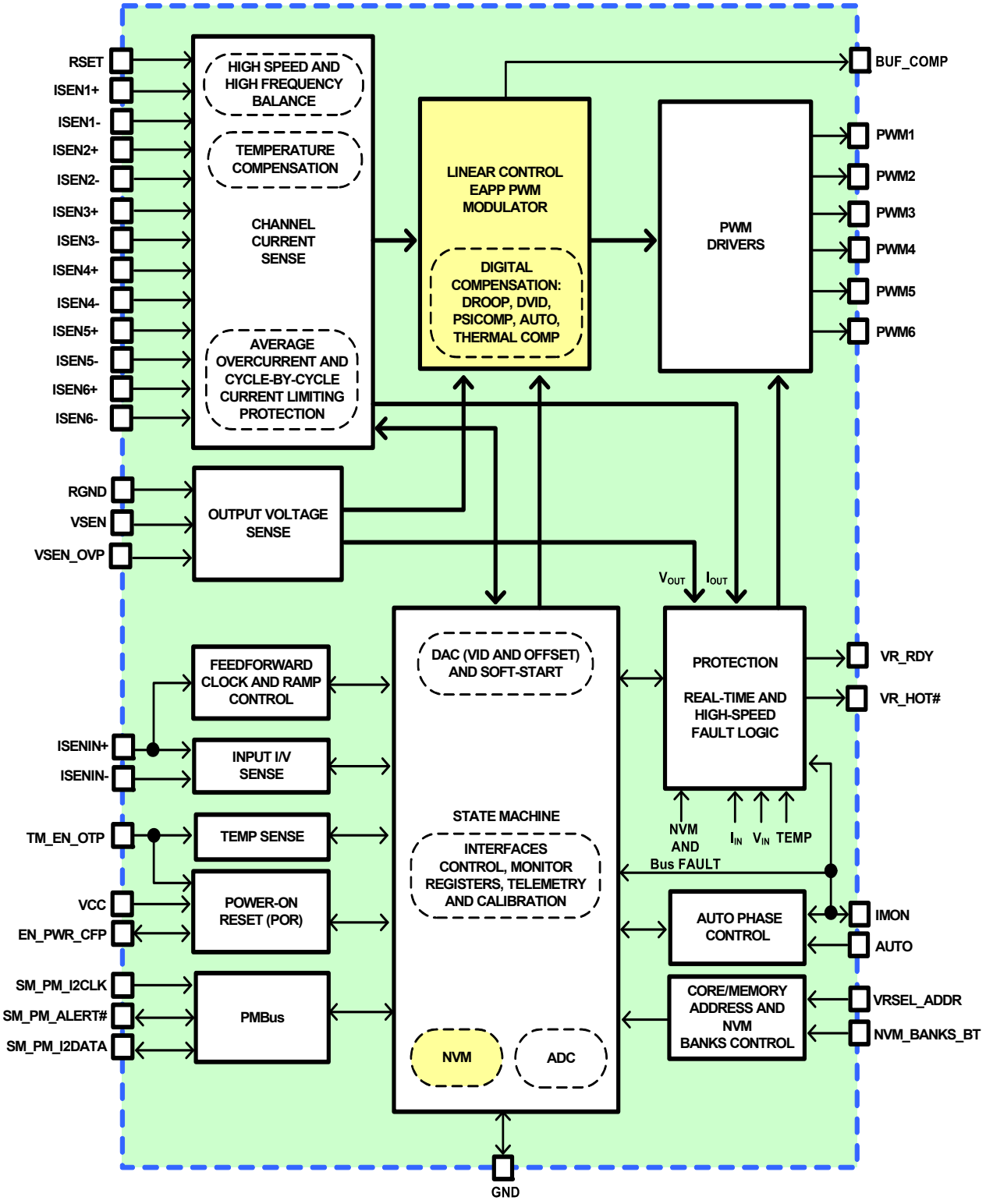

# Typical Application: 6-Phase VR with DrMOS and PMBus/SMBus/I$^2$C

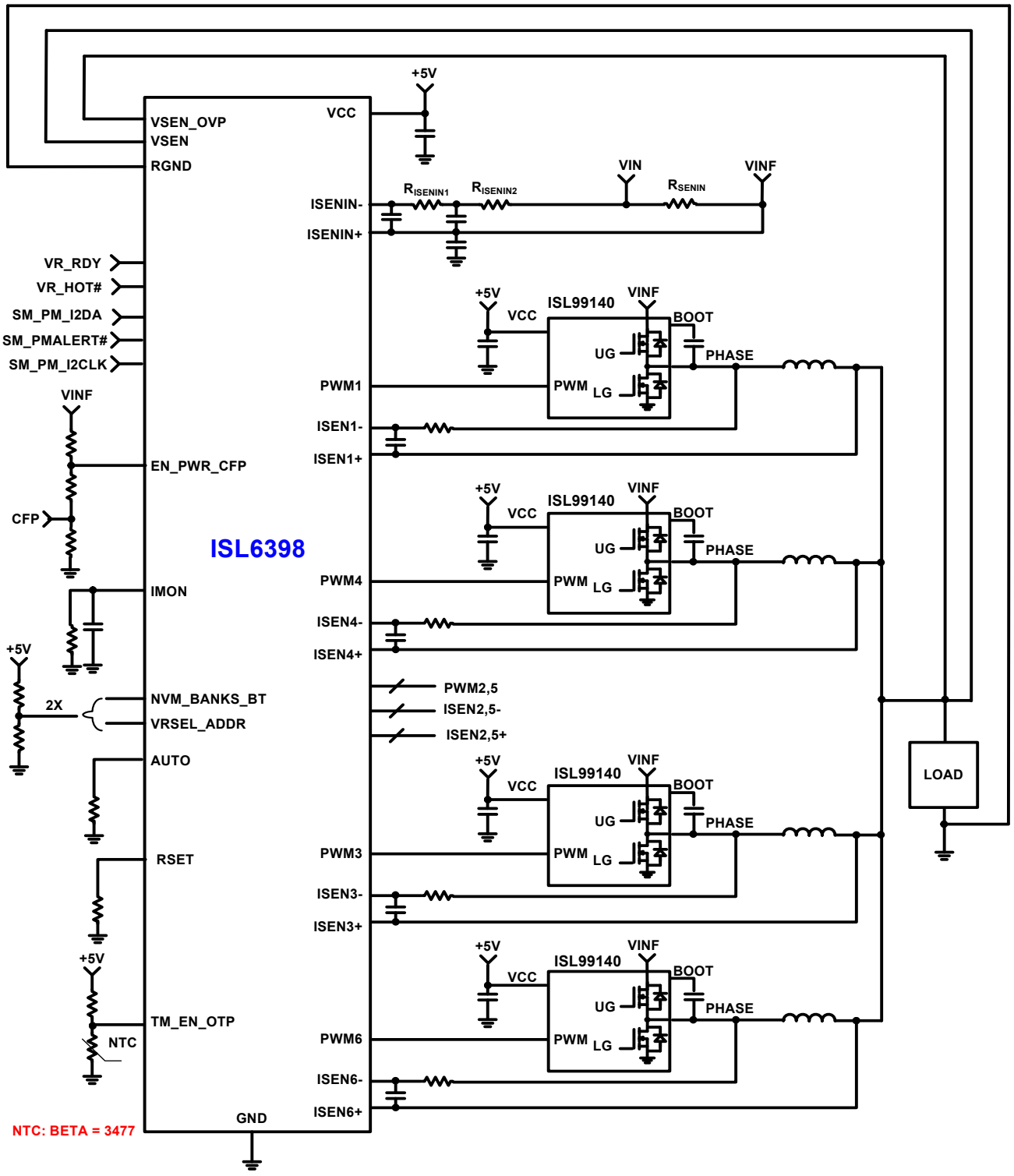

# Typical Application: 4-Phase VR with DrMOS and PMBus/SMBus/I$^2$C

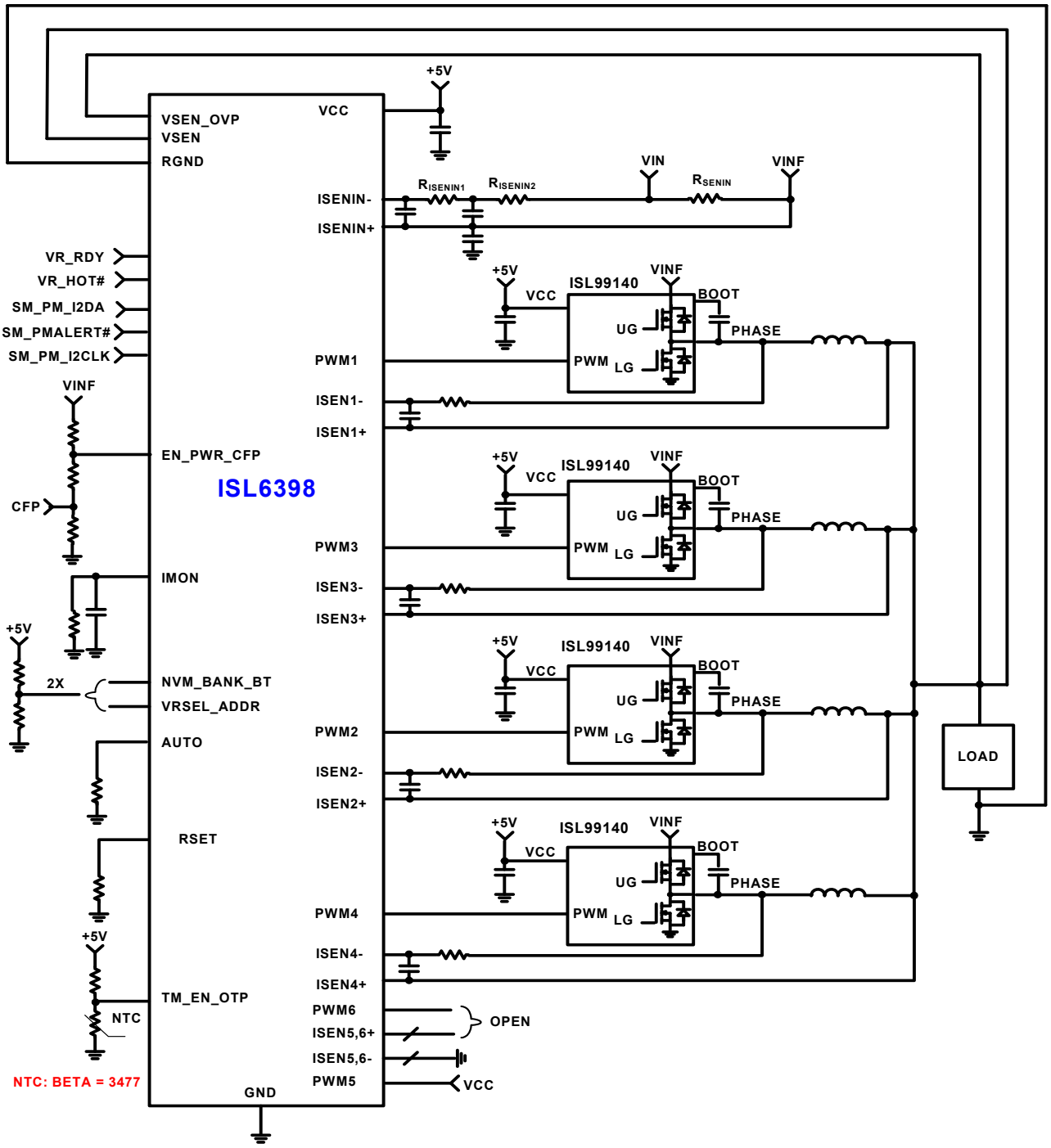

# Typical Application: 6-Phase VR for General Processor Power

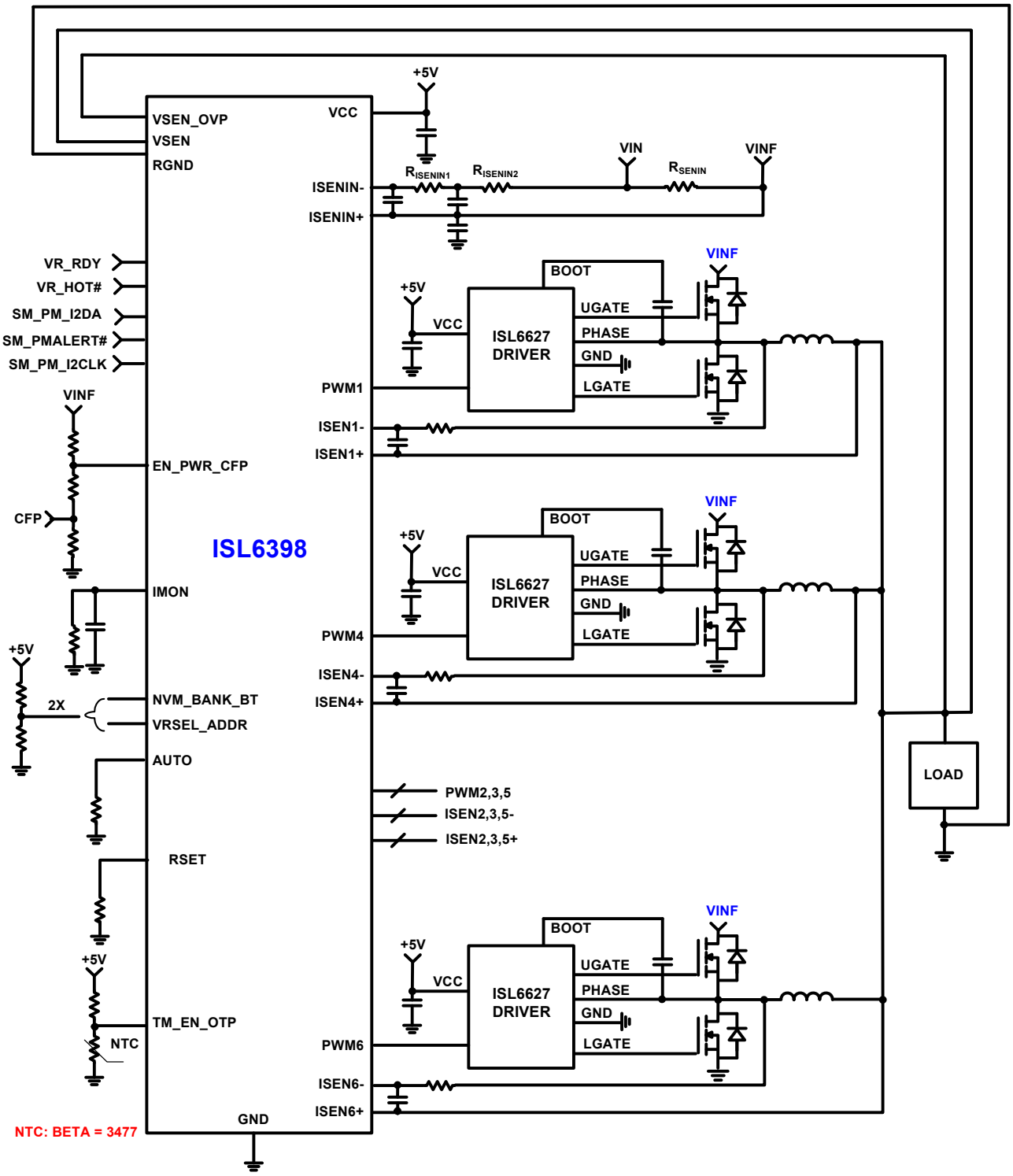

# Typical Application: 12-Phase VR for Over-clocking Applications

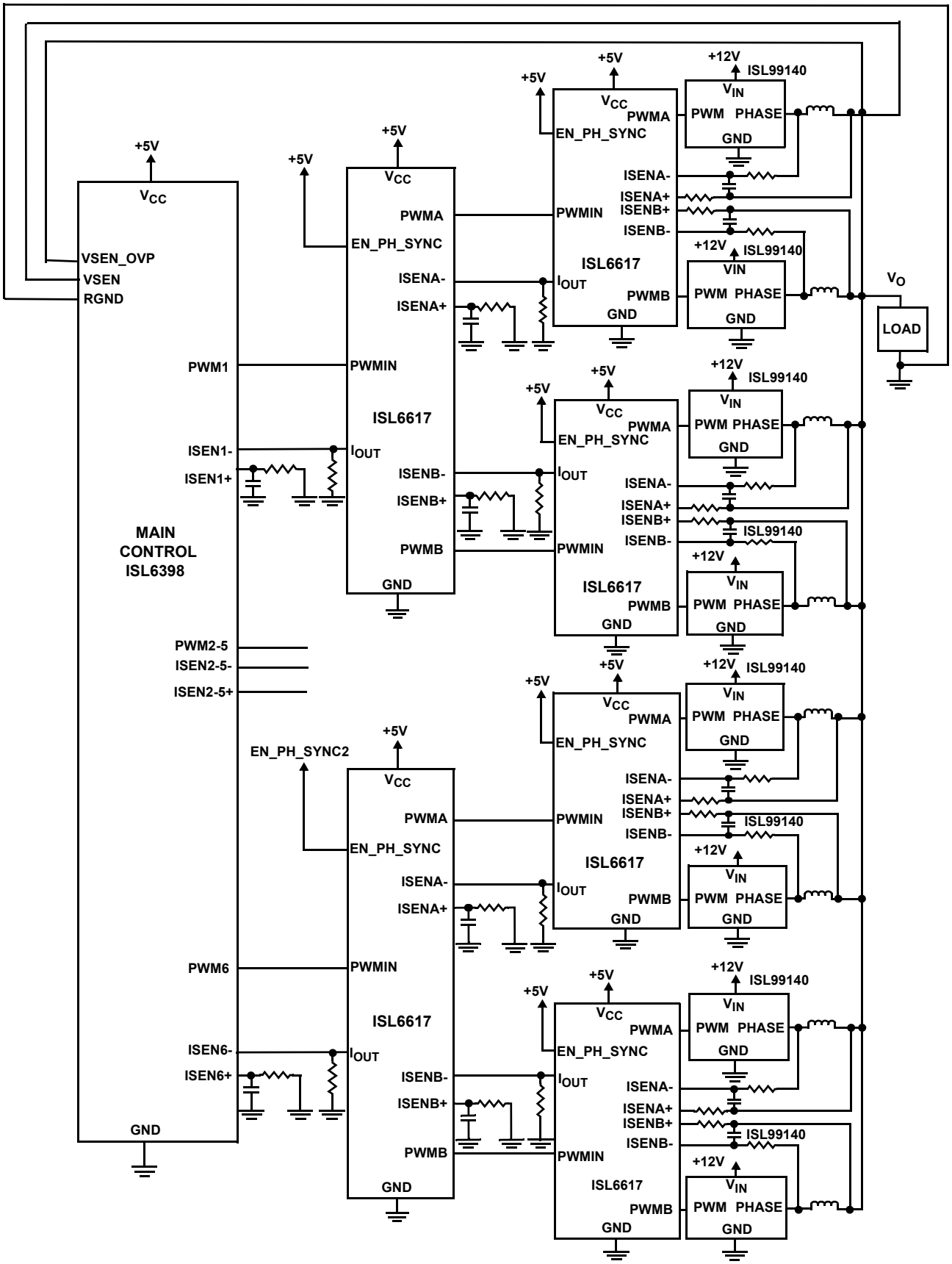

## Absolute Maximum Ratings

VCC, VR_RDY . . . . . +6V
ISENIN± . . . . . .GND -0.3V to 27V
All Other Pins . . . . . .GND -0.3V to $V_{CC}$ + 0.3V

## Recommended Operating Conditions

Supply Voltage, $V_{CC}$ . . . . . .+5V ±5%
EEPROM Write and Store Command Temperature . . . . . .-40°C to +85°C
Ambient Temperature
ISL6398HRTZ . . . . . .-10°C to +100°C
ISL6398IRTZ . . . . . .-40°C to +85°C

## Thermal Information

| Thermal Resistance (Notes 4, 5) | $\theta_{JA}$ (°C/W) | $\theta_{JC}$ (°C/W) |
|---|---|---|
| 40 Ld 5x5 TQFN Package . . . . . | 29 | 1 |

Maximum Junction Temperature . . . . . .+150°C
Maximum Storage Temperature Range . . . . . .-65°C to +150°C
Pb-Free Reflow Profile . . . . . see TB493

*CAUTION: Do not operate at or near the maximum ratings listed for extended periods of time. Exposure to such conditions may adversely impact product reliability and result in failures not covered by warranty.*

NOTES:

4. $\theta_{JA}$ is measured in free air with the component mounted on a high effective thermal conductivity test board with “direct attach” features. See Tech Brief TB379.
5. For $\theta_{JC}$, the “case temp” location is the center of the exposed metal pad on the package underside.

## Electrical Specifications

Recommended Operating Conditions, $V_{CC}$ = 5V, Unless Otherwise specified. **Boldface limits apply across the operating temperature range.**

| PARAMETER | TEST CONDITIONS | MIN (Note 7) | TYP | MAX (Note 7) | UNITS |
|---|---|---|---|---|---|
| **$V_{CC}$ SUPPLY CURRENT** | | | | | |
| Nominal Supply | $V_{CC}$ = 5VDC; EN_PWR = 5VDC; $F_{SW}$ = 400kHz | - | 35 | **45** | mA |
| Shutdown Supply | $V_{CC}$ = 5VDC; EN_PWR = 0VDC; $F_{SW}$ = 400kHz | - | 27 | **33** | mA |
| **POWER-ON RESET AND ENABLE** | | | | | |
| $V_{CC}$ Rising POR Threshold | | **4.22** | 4.35 | **4.55** | V |
| $V_{CC}$ Falling POR Threshold | | **4.00** | 4.10 | **4.22** | V |
| EN_PWR_CFP High Level Turn-OFF Threshold | Externally Driven | **3.5** | 3.6 | **3.7** | V |
| EN_PWR_CFP High Level Turn-ON Threshold | Externally Driven | **3.33** | 3.52 | **3.58** | V |
| EN_PWR_CFP Latch-OFF Level | Internally Driven, 5mA Load | **4.80** | - | **-** | V |
| EN_PWR_CFP Internal Pull-Up Impedance | | **-** | 12 | **34** | Ω |
| EN_PWR_CFP Rising Threshold | | **0.83** | 0.85 | **0.87** | V |
| EN_PWR_CFP Falling Threshold | | **0.70** | 0.77 | **0.84** | V |
| **DAC (VID+OFFSET)** | | | | | |
| System Accuracy of Commercial Temperature ($T_J$ = 0°C to +70°C, Note 6, Closed-Loop) | DAC = 1.5V to 3.04 V | **-0.5** | - | **0.5** | %VID |
| | DAC = 0.8V to 1.49V | **-5** | - | **5** | mV |
| | DAC = 0.25V to 0.795V | **-8** | - | **8** | mV |
| System Accuracy of ISL6398HRTZ ($T_J$ = -10°C to +100°C, Note 6, Closed-Loop) | DAC = 1.5V to 3.04 V | **-0.55** | - | **0.55** | %VID |
| | DAC = 0.8V to 1.49V | **-7** | - | **7** | mV |
| | DAC = 0.25V to 0.795V | **-9** | - | **9** | mV |
| System Accuracy of ISL6398IRTZ ($T_J$ = -40°C to +85°C, Note 6, Closed-Loop) | DAC = 1.5V to 3.04 V | **-0.6** | - | **0.6** | %VID |
| | DAC = 0.8V to 1.49V | **-10** | - | **10** | mV |
| | DAC = 0.25V to 0.795V | **-10** | - | **10** | mV |

**Electrical Specifications** Recommended Operating Conditions, $V_{CC}$ = 5V, Unless Otherwise specified. **Boldface limits apply across the operating temperature range. (Continued)**

| PARAMETER | TEST CONDITIONS | MIN (Note 7) | TYP | MAX (Note 7) | UNITS |
|---|---|---|---|---|---|
| **OSCILLATORS** | | | | | |
| Accuracy of Switching Frequency Setting | 390kHz, F3[2:0] = 0h = Original, ISL6398HRTZ | **355** | 390 | **425** | kHz |
| | 390kHz, F3[2:0] = 0h = Original, ISL6398IRTZ | **348** | 390 | **425** | kHz |
| Maximum Switching Frequency | | **-** | 2.025 | - | MHz |
| Minimum Switching Frequency | | **-** | 0.120 | **-** | MHz |
| Soft-start Ramp Rate | DVID = 0.3125mV/µs, Minimum | **0.3125** | - | **-** | mV/µs |
| | DVID = 2.5mV/µs | **2.5** | 3.0 | **3.4** | mV/µs |
| | DVID = 5.0mV/µs | **5.0** | 6.0 | **7.0** | mV/µs |
| | DVID = 13.25mV/µs, Maximum | **13.25** | - | **-** | mV/µs |
| Minimum Dynamic VID Slew Rate | DVID = 0.3125mV/µs, Minimum | **0.3125** | - | **-** | mV/µs |
| Maximum Dynamic VID Slew Rate | DVID = 13.25mV/µs, Maximum | **13.25** | - | **-** | mV/µs |
| Maximum Duty Cycle Per PWM | 390kHz | **95** | 98 | **99** | % |
| **PWM GENERATOR** | | | | | |
| Sawtooth Amplitude | $VR_{RAMP_ADJ}$ = 0.7V, ISENIN+ = 12V | **-** | 0.7 | - | V |
| | $VR_{RAMP_ADJ}$ = 1.0V, ISENIN+ = 12V | **-** | 1.0 | - | V |
| | $VR_{RAMP_ADJ}$ = 1.2V, ISENIN+ = 12V | **-** | 1.2 | - | V |
| | $VR_{RAMP_ADJ}$ = 1.5V, ISENIN+ = 12V | **-** | 1.5 | - | V |
| **BUFFERED COMP AMPLIFIER** | | | | | |
| Open-Loop Gain | $R_L$ = 10kΩ to ground | **-** | 96 | - | dB |
| Open-Loop Bandwidth | | **-** | 20 | - | MHz |
| Maximum Output Voltage | No Load | **3.6** | 4.0 | **-** | V |
| Output High Voltage | 1mA Load | **3.4** | 3.9 | **-** | V |
| Output Low Voltage | 1mA Load | **1.88** | | **1.99** | V |
| **PWM OUTPUT (PWM[6:1])** | | | | | |
| PWM[6:1] Sink Impedance | PWM = Low with 1mA Load, for Fast Transition | **-** | 80 | - | Ω |
| | PWM = Low with 1mA Load, ISL6398HRTZ | **170** | 285 | **425** | Ω |
| | PWM = Low with 1mA Load, ISL6398IRTZ | **170** | 285 | **400** | Ω |
| PWM[6:1] Source Impedance | PWM = High, Forced to 3.7V | **60** | 125 | **210** | Ω |
| PWM Mid-Level | 0.4mA Load, 5V PWM | **36** | 40 | **44** | %VCC |
| PWM Mid-Level | 0.4mA Load, 3.3V PWM | **24** | 28 | **31** | %VCC |
| **CURRENT SENSE AND OVERCURRENT PROTECTION** | | | | | |
| Sensed Current Tolerance CS Offset and Mirror Error Included, $R_{SET}$ = 12.8kΩ | ($T_J$ = 0°C to +70°C) | **73** | 78 | **82.5** | µA |
| | ($T_J$ = -40°C to +100°C, HRTZ, IRTZ) | **72** | 78 | **83** | µA |
| Average OC Trip Level at Normal CCM PWM Mode CS Offset and Mirror Error Included, $R_{SET}$ = 12.8kΩ | ($T_J$ = 0°C to +70°C) | **96** | 103 | **111** | µA |
| | ($T_J$ = -40°C to +100°C, HRTZ, IRTZ) | **95** | 103 | **112** | µA |
| Average Overcurrent Trip Level at PSI1/2/3 Mode CS Offset and Mirror Error Included, $R_{SET}$ = 12.8kΩ | ($T_J$ = 0°C to +70°C) | **92** | 107 | **122** | µA |
| | ($T_J$ = -40°C to +100°C, HRTZ, IRTZ) | **90** | 125 | **124** | µA |

**Electrical Specifications** Recommended Operating Conditions, $V_{CC}$ = 5V, Unless Otherwise specified. **Boldface limits apply across the operating temperature range. (Continued)**

| PARAMETER | TEST CONDITIONS | MIN (Note 7) | TYP | MAX (Note 7) | UNITS |
|---|---|---|---|---|---|
| Peak Current Limit for Individual Channel CS Offset and Mirror Error Included, $R_{SET}$ = 12.8kΩ | ($T_J$ = 0°C to +70°C) | **118** | 125 | **133** | µA |
| | ($T_J$ = -40°C to +100°C, HRTZ, IRTZ) | **116** | 125 | **134** | µA |
| IMON OCP Trip Level | | **2.9** | 3.0 | **3.1** | V |
| IMON VOLTAGE IMAX (FF) TRIP POINT | Higher than this will be “FF” | **2.45** | 2.5 | **2.56** | V |
| READ_IIN (1F) Maximum Threshold | | - | 10 | - | µA |
| Input Peak Current Trip Level | | **13.9** | 15 | **16.5** | µA |
| **THERMAL MONITORING** | | | | | |
| VR_HOT# Pull-down Impedance | | - | 9.2 | **13** | Ω |
| TM Voltage at VR_HOT# Trip | TMAX = +100°C (see Table 6), Programmable via Tmax | - | 39.12 | - | %VCC |
| VR_HOT# and Thermal Alert# Hysteresis | | - | 3 | - | °C |
| Leakage Current of VR_HOT# | With external pull-up resistor connected to $V_{CC}$ | - | - | **1** | µA |
| Over-Temperature Shutdown Threshold | | **0.91** | 0.94 | **0.97** | V |
| Over-Temperature Shutdown Reset Threshold | | **1.04** | 1.07 | **1.11** | V |
| **VR READY AND PROTECTION MONITORS** | | | | | |
| Leakage Current of VR_RDY | With pull-up resistor externally connected to $V_{CC}$ | - | - | **1** | µA |
| VR READY Low Voltage | 4mA Load | - | - | **0.3** | V |
| Undervoltage Protection Threshold (UVP) Can Be Disabled by DFh | Voltage below VID E1[3:0] = 0h) | **65** | 105 | **146** | mV |
| | Voltage below VID E1[3:0] = 1h) | **93** | 141 | **191** | mV |
| | Voltage below VID E1[3:0] = 2h) | **121** | 178 | **236** | mV |
| | Voltage below VID E1[3:0] = 3h) | **149** | 214 | **281** | mV |
| | Voltage below VID E1[3:0] = 4h) | **177** | 252 | **330** | mV |
| | Voltage below VID E1[3:0] = 5h) | **207** | 291 | **378** | mV |
| | Voltage below VID E1[3:0] = 6h) | **233** | 328 | **426** | mV |
| | Voltage below VID E1[3:0] = 7h) | **288** | 402 | **519** | mV |
| Undervoltage Warning Threshold (UVP Warning) Can Be Disable by DFh | Voltage below VID E1[3:0] = 0h) | **10** | 41 | **72** | mV |
| | Voltage below VID E1[3:0] = 1h) | **35** | 72 | **109** | mV |
| | Voltage below VID E1[3:0] = 2h) | **61** | 103 | **146** | mV |
| | Voltage below VID E1[3:0] = 3h) | **84** | 135 | **186** | mV |
| | Voltage below VID E1[3:0] = 4h) | **109** | 168 | **226** | mV |
| | Voltage below VID E1[3:0] = 5h) | **133** | 202 | **268** | mV |
| | Voltage below VID E1[3:0] = 6h) | **157** | 234 | **307** | mV |
| | Voltage below VID E1[3:0] = 7h) | **201** | 298 | **389** | mV |
| Undervoltage Protection Reset Hysteresis | Higher than UVP | - | 19 | - | mV |
| Undervoltage Warning Reset Hysteresis | Higher than UVP Warning | - | 17 | - | mV |

**Electrical Specifications** Recommended Operating Conditions, $V_{CC}$ = 5V, Unless Otherwise specified. **Boldface limits apply across the operating temperature range. (Continued)**

| PARAMETER | TEST CONDITIONS | MIN (Note 7) | TYP | MAX (Note 7) | UNITS |
|---|---|---|---|---|---|
| Overvoltage Protection Threshold (OVP) Can Be Disabled by DFh | Prior to the End of Soft-start (D8h[4:3] = 0h) | **1.51** | 1.58 | **1.70** | V |
| | Prior to the End of Soft-start (D8h[4:3] = 1h) | **1.75** | 1.86 | **1.95** | V |
| | Prior to the End of Soft-start (D8h[4:3] = 2h) | **2.20** | 2.29 | **2.40** | V |
| | Prior to the End of Soft-start (D8h[4:3] = 3h) | **3.10** | 3.32 | **3.50** | V |
| | End of Soft-start, the voltage above VID D8[2:0] = 0h) | **91** | 135 | **177** | mV |
| | End of Soft-start, the voltage above VID D8[2:0] = 1h) | **125** | 177 | **225** | mV |
| | End of Soft-start, the voltage above VID D8[2:0] = 2h) | **158** | 218 | **274** | mV |
| | End of Soft-start, the voltage above VID D8[2:0] = 3h) | **191** | 260 | **323** | mV |
| | End of Soft-start, the voltage above VID D8[2:0] = 4h) | **254** | 342 | **424** | mV |
| | End of Soft-start, the voltage above VID D8[2:0] = 5h) | **318** | 425 | **526** | mV |
| | End of Soft-start, the voltage above VID D8[2:0] = 6h) | **347** | 460 | **580** | mV |
| | End of Soft-start, the voltage above VID D8[2:0] = 7h) | **395** | 549 | **697** | mV |
| Overvoltage Protection Reset Hysteresis | Prior to the end of Soft-start, lower than OVP | **55** | 110 | **180** | mV |
| | During operation, lower than OVP | - | 83 | - | mV |
| Overvoltage Warning Threshold (OVP) Can Be Disabled by DFh | End of Soft-start, the voltage above VID D8[2:0] = 0h) | **22** | 54 | **83** | mV |
| | End of Soft-start, the voltage above VID D8[2:0] = 1h) | **60** | 96 | **129** | mV |
| | End of Soft-start, the voltage above VID D8[2:0] = 2h) | **97** | 138 | **176** | mV |
| | End of Soft-start, the voltage above VID D8[2:0] = 3h) | **132** | 179 | **225** | mV |
| | End of soft-start, the voltage above VID D8[2:0] = 4h) | **205** | 264 | **324** | mV |
| | End of soft-start, the voltage above VID D8[2:0] = 5h) | **273** | 347 | **427** | mV |
| | End of soft-start, the voltage above VID D8[2:0] = 6h) | **308** | 389 | **476** | mV |
| | End of soft-start, the voltage above VID D8[2:0] = 7h) | **377** | 474 | **578** | mV |
| Overvoltage Warning Reset Hysteresis | Lower than OVP Warning | - | 42 | - | mV |
| **SMBus/PMBus/I$^2$C** | | | | | |
| Signal Input Low Voltage | | - | - | **0.8** | V |
| Signal Input High Voltage | | **2.1** | - | **VCC** | V |
| Signal Output Low Voltage | 4mA loading on Alert# | - | - | **0.4** | V |
| ALERT# Pull-down Impedance | | - | 28 | **50** | Ω |
| DATA Pull-down Impedance | | - | 28 | **50** | Ω |
| CLOCK Maximum Speed | | **1.5** | - | - | MHz |
| CLOCK Minimum Speed | | - | - | **0.05** | MHz |
| Time-out | | 25 | 30 | 35 | ms |
| **EEPROM** | | | | | |
| Number of NVM_BANK | | - | 8 | - | |
| NVM_BANK Loading Time | Including POR delay and Resistor Reading Time | - | 16 | **20** | ms |

NOTES:

6. These parts are designed and adjusted for accuracy with all errors in the voltage loop included.
7. Compliance to datasheet limits is assured by one or more methods: production test, characterization and/or design.

# Functional Pin Descriptions

Refer to Table 19 on page 53 for Design and Layout Considerations.

**VCC -** Supplies the power necessary to operate the chip. Connect this pin directly to a +5V supply with a high quality ceramic bypass capacitor. The controller start to operate, when the voltage on this pin exceeds the rising POR threshold and shuts down when the voltage on this pin drops below the falling POR threshold.

**GND -** The bottom metal base of ISL6398 is return of VCC supply. It is also the return of the PMBus as well as all PWM output drivers. Connect it to system ground; also externally connect pins 13, 14, and 15 to system GND.

**ISENIN+, ISENIN- -** These pins are current sense inputs to the differential amplifier of the input supply. The sensed current is used for input power monitoring and power management of the system. When not used, connect ISENIN+ to VIN and a resistor divider with a ratio of 1/3 on ISENIN± pin, say 499kΩ in between ISENIN± pins and then 1.5MΩ from ISENIN- to ground (see Figure 29). Refer to “Input Current Sensing” on page 30 for configuration details. Regardless input current sense is used or not, ISENIN+ should be connected to input voltage ($V_{IN}$) for feed-forward compensation to maintain a constant loop gain over the input line variation.

**EN_PWR_CFP -** This pin is a threshold-sensitive enable input and a catastrophic failure protection (CFP) output. Connecting the power train input supply to this through an appropriate resistor divider provides input undervoltage protection and a means to synchronize the power sequencing of the controller and the MOSFET driver ICs. When EN_PWR_CFP is driven above 0.85V but below 3.3V, the controller is actively depending on status of the TM_EN_OTP, the internal POR, and pending fault states. Driving EN_PWR_CFP below 0.75V or above 3.7V will turn off the controller, clear all fault states (except for CFP fault) and prepare the ISL6398 to soft-start when re-enabled. In addition, this pin will be latched high (VCC) by the input overcurrent (monitored by ISENIN±) or VR overvoltage event. The latch resets by cycling VCC and cannot reset by TM_EN_OTP or EN_PWR_CFP since when the catastrophic failure (CFP) is triggered, the input power is removed from VR so is the VTT voltage rail and it is PGOOD signal. To keep CFP active, VCC should be biased with a standby supply. This feature means to provide protection to the case that the VR with shorted high-side MOSFET draws insufficient current to trigger the input supply’s over current trip level, this pin will send an active high signal (CFP) to disconnect the input supply before catching fire or further damage of PCB. Refer “Catastrophic Fault Protection” on page 30 for more details.

**VSEN_OVP -** This pin monitors the regulator output for overvoltage protection. Connect this pin to the positive rail remote sensing point of the microprocessor or load. This pin tracks with the VSEN pin. If a resistive divider is placed on the VSEN pin, a resistive divider with the same ratio should be placed on the VSEN_OVP pin to track UVP and OVP.

**VSEN -** This pin compensates the voltage drop between the load and local output rail for precision regulation. Connect this pin to the positive rail remote sensing point of the microprocessor or load. It also is the APA level sensing input.

**RGND -** This pin compensates the offset between the remote ground of the load and the local ground of this device for precision regulation. Connect this pin to the negative rail remote sensing point of the microprocessor or load.

**VR_RDY -** VR_RDY indicates that soft-start has completed and the output remains in normal operation. It is an open-drain logic output. When OCP, UVP, OVP, or CFP occurs, VR_RDY is pulled low.

**TM_EN_OTP -** Input pin for the temperature measurement. Connect this pin through an NTC thermistor to GND and a resistor to VCC of the controller. The voltage at this pin is inversely proportional to the VR temperature. The device monitors the VR temperature based on the voltage at the TM pin. Combined with “TCOMP” setting, the sensed current is thermally compensated. The VR_HOT# asserts low if the sensed temperature at this pin is higher than the maximum desired temperature, “TMAX”. The NTC should be placed close to the current sensing element, the output inductor or dedicated sense resistor on Phase 1. A decoupling capacitor (0.1µF) is typically needed in close proximity to the controller. In addition, the controller is disabled when this pin’s voltage drops below 0.95 (typically) and is active when it is above 1.05V (typically); it can serve as Enable and Over-Temperature functions, however, when it is used as an Enable toggle input, bit2 of STATUS_BYTE (78h) will flag OT; CLEAR_FAULTS (03h) command must be sent to clear the fault after VR start-up. If not used, connect a 1MΩ/2MΩ resistor divider or tie to $V_{CC}$.

**PWM[6:1] -** Pulse width modulation outputs. Connect these pins to the PWM input pins of the Intersil driver IC(s). The number of active channels is determined by the state of PWM[6:2]. Tie PWM(N+1) to VCC to configure for N-phase operation. The PWM firing order is sequential from 1 to N with N being the number of active phases. If PWM1 is tied high, the VR is disabled.

**ISEN[6:1]+, ISEN[6:1] -** The ISEN+ and ISEN- pins are current sense inputs to individual differential amplifiers of VR. The sensed current is used for channel current balancing, overcurrent protection, and droop regulation. Inactive channels should have their respective current sense inputs, ISEN[6:#]- grounded, and ISEN[6:#]+ open. For example, ground ISEN[6:5]- and open ISEN[6:5]+ for 4-phase operation. DO NOT ground ISEN[6:1]+. For DCR sensing, connect each ISEN- pin to the node between the RC sense elements. Tie the ISEN+ pin to the other end of the sense capacitor (typically output rail). The voltage across the sense capacitor is proportional to the inductor current. Therefore, the sensed current is proportional to the inductor current and scaled by the DCR of the inductor and $R_{SET}$.

**BUF_COMP -** Buffered output of internal COMP.

**VR_HOT# -** Indicator of VR temperature reaching above TMAX set by PMBus E8[2:0]. It is an open-drain logic output. Normally open if the measured VR temperature is less than TMAX, and pulled low when the measured VR temperature exceeds TMAX.

**RSET -** A resistor connected from this pin to ground sets the current gain of the current sensing amplifier. The RSET resistor value can be set from 3.84kΩ to 60.4kΩ and is 64x of the equivalent $R_{ISEN}$ resistor value. Therefore, the effective current sense resistor value can be set between 60Ω and 943Ω.

**IMON -** IMON is the output pin of sensed, thermally compensated (if internal thermal compensation is used) average current of VR0. The voltage at the IMON pin is proportional to the load current and the resistor value. When it reaches to 3.0V, it initiates an overcurrent shutdown, while 2.5V IMON voltage corresponds to READ_IOUT (8Ch) maximum reading. By choosing the proper value for the resistor at IMON pin, the overcurrent trip level can be set lower than the fixed internal overcurrent threshold. During dynamic VID, the OCP function of this pin is disabled to avoid false triggering. Tie it to GND if not used. Refer to "Current Sense Output" on page 25 for more details.

**AUTO -** A resistor from the pin to ground sets the current threshold of phase dropping for operation. The AUTO mode can be permanently disabled by pulling this pin to ground or PMBus D4h[2]. See Table 2 on page 17 and Table 8 on page 32 for more details.

**SM_PM_I2CLK -** Synchronous clock signal input of SMBus/PMBus/$I^2C$.

**SM_PM_I2DATA -** I/O pin for transferring data signals SMBus/PMBus/$I^2C$ and VR controller.

**SM_PMALERT# -** Output pin for transferring the active low signal driven asynchronously from the VR controller to SMBus/PMBus.

**VRSEL_ADDR -** Register pin used to program VR address (PMBus) and to determine 5m/step or 10mV/step mode.

**NVM_BANK_BT -** Register pin to select NVM memory bank to use (up to 8 configuration banks) and boot voltage, which can be set by this pin or the value stored in NVM bank.

# Operation

The ISL6398 is the **smallest** 6-Phase PWM controller. It utilizes Intersil's proprietary Advanced Linear EAPP (Enhanced Active Pulse Positioning) digital control scheme that can process voltage and current information in real time for fast control and high speed protection and realize digital power management capability and flexibility. It achieves the extremely fast linear transient response with fewer output capacitors and overcomes many hurdles of traditional digital approach, which uses non-linear, discrete control method for both voltage loop and current balance loop and runs into beat frequency oscillation and non-linear response. The ISL6398 is designed to cloud computing, networking, datacenter, and POL applications. The system parameters and required registers are programmable and can be stored into selected NVM_BANK via PMBus, no firmware required. It allows up to 8 memory banks, i.e., 8 different applications. This greatly simplifies the system design for various platforms and lowers inventory complexity and cost by using a single device.

In addition, this controller is compatible with phase doublers (ISL6611A and ISL6617), which can double or quadruple the phase count. For instance, the multi-phase PWM can realize up to 24-phase count system. A higher phase count system can improve thermal distribution and power conversion efficiency at heavy load.

The ISL6398 also supports coupled (2-Phase CI) inductor design. Refer to Intersil's application note, AN1268 for detailed coupled inductor discussion.

## Multiphase Power Conversion

High Power processor load current profiles have changed to the point that the advantages of multiphase power conversion are impossible to ignore. The technical challenges associated with producing a single-phase converter (which are both cost-effective and thermally viable), have forced a change to the cost-saving approach of multiphase. The ISL6398 controller helps reduce the complexity of implementation by integrating vital functions and requiring minimal output components. The typical application circuits diagrams on pages 6 through 9 provide the top level views of multiphase power conversion using the ISL6398 controller.

## Interleaving

The switching of each channel in a multiphase converter is timed to be symmetrically out-of-phase with each of the other channels. In a 3-phase converter, each channel switches 1/3 cycle after the previous channel and 1/3 cycle before the following channel. As a result, the 3-phase converter has a combined ripple frequency three times greater than the ripple frequency of any one phase, as illustrated in Figure 1. The three channel currents (IL1, IL2 and IL3) combine to form the AC ripple current and the DC load current. The ripple component has three times the ripple frequency of each individual channel current. Each PWM pulse is terminated 1/3 of a cycle after the PWM pulse of the previous phase. The DC components of the inductor currents combine to feed the load.

To understand the reduction of ripple current amplitude in the multiphase circuit, examine Equation 1, which represents an individual channel's peak-to-peak inductor current.

$$I_{p\text{-}p} = \frac{(V_{IN} - V_{OUT}) \cdot V_{OUT}}{L \cdot F_{SW} \cdot V_{IN}} \quad \text{(EQ. 1)}$$

In Equation 1, $V_{IN}$ and $V_{OUT}$ are the input and output voltages respectively, L is the single-channel inductor value, and $F_{SW}$ is the switching frequency.

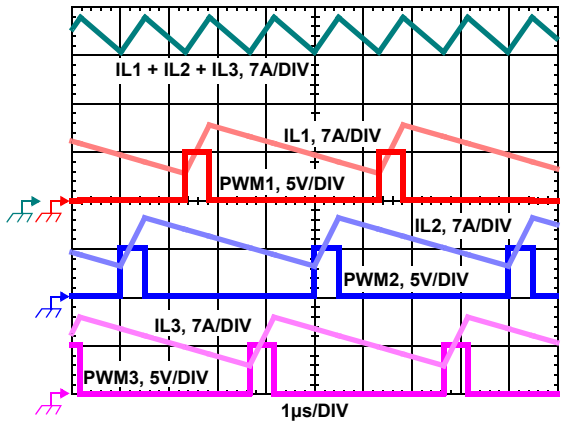


**FIGURE 1. PWM AND INDUCTOR-CURRENT WAVEFORMS FOR 3-PHASE CONVERTER**

In the case of multiphase converters, the capacitor current is the sum of the ripple currents from each of the individual channels. Compare Equation 1 to the expression for the peak-to-peak current after the summation of N symmetrically phase-shifted inductor currents in Equation 2, the peak-to-peak overall ripple current $I_{C(P-P)}$ decreases with the increase in the number of channels, as shown in Figure 2.

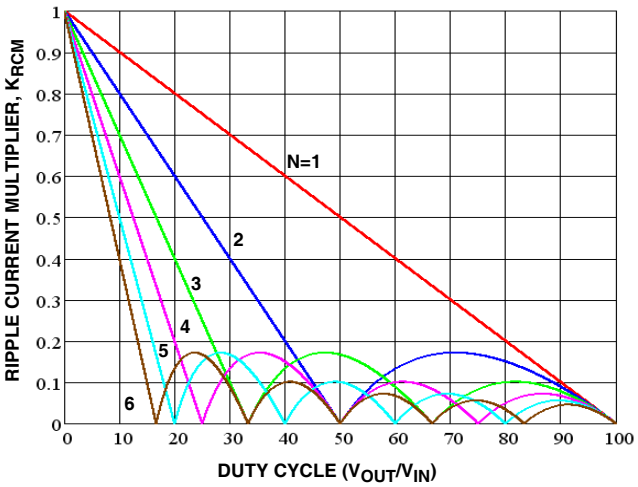


FIGURE 2. RIPPLE CURRENT MULTIPLIER VS. DUTY CYCLE

Output voltage ripple is a function of capacitance, capacitor Equivalent Series Resistance (ESR), and the summed inductor ripple current. Increased ripple frequency and lower ripple amplitude means that the designer can use less per-channel inductance and few or less costly output capacitors for any performance specification.

$$I_{c(p-p)} = \frac{V_{OUT}}{L \cdot F_{SW}} K_{RCM} \quad \text{(EQ. 2)}$$

$$K_{RCM} = \frac{(N \cdot D - m + 1) \cdot (m - (N \cdot D))}{N \cdot D}$$

$$\text{for} \quad m - 1 \le N \cdot D \le m$$

$$m = \text{ROUNDUP}(N \cdot D, 0)$$

Another benefit of interleaving is to reduce input ripple current. Input capacitance is determined in part by the maximum input ripple current. Multiphase topologies can improve overall system cost and size by lowering input ripple current and allowing the designer to reduce the cost of input capacitors. The example in Figure 3 illustrates input currents from a three-phase converter combining to reduce the total input ripple current.

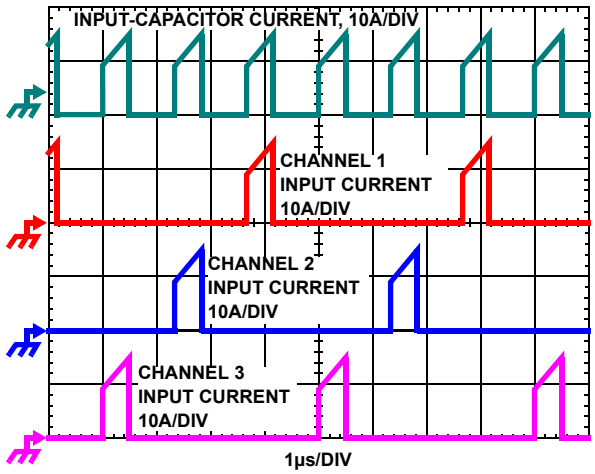


FIGURE 3. CHANNEL INPUT CURRENTS AND INPUT-CAPACITOR RMS CURRENT FOR 3-PHASE CONVERTER

The converter depicted in Figure 3 delivers 36A to a 1.5V load from a 12V input. The RMS input capacitor current is 5.9A. Compare this to a single-phase converter also stepping down 12V to 1.5V at 36A. The single-phase converter has $11.9A_{RMS}$ input capacitor current. The single-phase converter must use an input capacitor bank with twice the RMS current capacity as the equivalent three-phase converter.

Figures 37, 38 and 39, as described in “Input Capacitor Selection” on page 52, can be used to determine the input capacitor RMS current based on load current, duty cycle, and the number of channels. They are provided as aids in determining the optimal input capacitor solution. Figure 40 shows the single phase input-capacitor RMS current for comparison.

## PWM Modulation Scheme

The ISL6398 adopts Intersil's proprietary Enhanced Active Pulse Positioning (EAPP) modulation scheme to improve transient performance. The EAPP is a unique dual-edge PWM modulation scheme with both PWM leading and trailing edges being independently moved to give the best response to transient loads. The EAPP has an inherited function, similar to Intersil's proprietary Adaptive Phase Alignment (APA) technique, to turn on all phases together to further improve the transient response, when there are sufficiently large load step currents. The EAPP is a variable frequency architecture, providing linear control over transient events and evenly distributing the pulses among all phases to achieve very good current balance and eliminate beat frequency oscillation over a wide range of load transient frequencies.

To further improve the line and load transient responses, the multi-phase PWM features feed-forward function to change the up ramp with the input line (voltage on ISENIN+ pin) to maintain a constant overall loop gain over a wide range input voltage. The up ramp of the internal sawtooth is defined in Equation 3.

$$V_{RAMP} = \frac{V_{IN} \cdot V_{RAMP_ADJ}}{12V} \quad \text{(EQ. 3)}$$

With EAPP control and feed-forward function, the ISL6398 can achieve excellent transient performance over wide frequency range of load step, resulting in lower demand on the output capacitors.

Under steady state conditions, the operation of the ISL6398 PWM modulator is similar to a conventional trailing edge modulator. Conventional analysis and design methods can therefore be used for steady state and small signal analysis.

## PWM Operation

The timing of each channel is set by the number of active channels. The default channel setting for the ISL6398 is six. The switching cycle is defined as the time between PWM pulse termination signals of each channel. The cycle time of the pulse signal is the inverse of the switching frequency. The PWM signals command the MOSFET driver to turn on/off the channel MOSFETs.

The ISL6398 can work in a 0 to 6-Phase configuration. Tie PWM(N+1) to VCC to configure for N-phase operation. PWM firing order is sequential from 1 to N with N being the number of active phases, as summarized in Table 1. For 6-phase operation, the channel firing sequence is 1-2-3-4-5-6, and they are evenly spaced over 1/6 of a cycle. Connecting PWM6 to $V_{CC}$ configures 5-phase operation, the channel firing order is 1-2-3-4-5 and the phase spacing is 1/5 of a cycle. If PWM2 is connected to $V_{CC}$, only Channel 1 operation is selected. If PWM1 is connected to $V_{CC}$, the VR operation is turned off.

TABLE 1. PHASE NUMBER AND PWM FIRING SEQUENCE

| N | PHASE SEQUENCE | PWM# TIED TO $V_{CC}$ | ACTIVE PHASE AT 0A LOAD |
|---|---|---|---|
| 5 | 1-2-3-4-5 | None | PWM1/3 |
| 4 | 1-2-3-4 | PWM5 | PWM1/3 |
| 3 | 1-2-3 | PWM4 | PWM1/2 |
| 2 | 1-2 | PWM3 | PWM1/2 |
| 1 | 1 | PWM2 | PWM1 |
| 0 | OFF | PWM1 | OFF |

The controller starts phase shedding the next switching cycle. The controller reduces the number of active phases according to the logic state on Table 2. “NPSI” register and AUTO pin program the controller in operation of standard (SI), 2-phase coupled, or (N-x)-phase coupled inductors. Different cases yield different PWM output behaviors on both dropped phase(s) and operational phase(s) as load changes. When APA is triggered, it pulls the controller back to full phase operation to sustain an immediate heavy transient load. Note that “N-x” means N-x phase(s) coupled and x phase(s) are uncoupled.

For 2-Phase coupled inductor (CI) operation, both coupled phases should be 180° out-of-phase. In low power conditions, it drops to 2-phase and the opposite phase of the operational phase turns on its low-side MOSFET to circulate inductor current to minimize conduction loss when Phase 1 is high.

In low power condition, VR is in single-phase CCM operation with PWM1, or 2-phase CCM operation with PWM1 and 2, 3 or 4, as shown in Table 1. The number of operational phases is configured by “NPSI” register, shown in Table 2.

TABLE 2. PHASE DROPPING CONFIGURATION AT LOW POWER

| NPSI D2[1:0] | CODE | | AUTO MINIMUM PHASE COUNT |
|---|---|---|---|
| 0h | SI1 | SI, (N-1)-CI | 1-Phase |
| 1h | SI2 | SI, (N-2)-CI | 2-Phase |
| 2h | CI1 | 2-Phase CI | 1-Phase |
| 3h | CI2 | 2-Phase CI | 2-Phase |

NOTE: For 2-Phase CI option, the dropped coupled phase turns on LGATE to circulate current when PWM1 is high. Programmable via PMBus.

While the controller is operational ($V_{CC}$ above POR, TM_EN_OTP and EN_PWR_CFP are both high, valid VID inputs), it can pull the PWM pins to ~40% of $V_{CC}$ (~2V for 5V $V_{CC}$ bias, for 5V PWM) or ~28% of $V_{CC}$ (for 3.3V PWM) during various stages, such as soft-start delay, phase shedding operation, or fault conditions (OC or OV events). The matching driver's internal PWM resistor divider can further raise the PWM potential, but not lower it below the level set by the controller IC. Therefore, the controller's PWM outputs are designed to be compatible with DrMOS and Intersil drivers that require 3.3V and 5V PWM signal amplitudes, programmed by PMBus.

## DrMOS and Driver Compatibility

In operational mode, the ISL6398 can actively drive PWM into tri-state level (mid level), which can be programmed to be compatible with 3.3V or 5V PWM input DrMOS or Drivers. The ISL6398’s PWM “LOW” level is 0V and PWM “HIGH” level is $V_{CC}$ (5V). The PWM “HIGH” minimum threshold of the DrMOS should be higher than 33% of $V_{CC}$ for 3.3V PWM logic and 44% of $V_{CC}$ for 5V PWM logic, while the PWM “LOW” maximum threshold of the DrMOS should be lower than 26% of $V_{CC}$ for 3.3V PWM logic and 36% of $V_{CC}$ for 5V PWM logic. Since most of industrial DrMOS devices are not compatible with Intersil’s PWM protocol for diode emulation, therefore, the diode emulation mode should be disabled in both controller and DrMOS. Coupling with the ISL6627, zero current shutdown can be achieved, which minimizes the power stage stress.

## Phase Doubler Compatibility

The ISL6398 is compatible with phase doublers (ISL6611A and ISL6617), which can double or quadruple the phase count. For instance, the multi-phase PWM can realize up to 24-phase count system. A higher phase count system can improve thermal distribution and power conversion efficiency at heavy load. Non-Intersil Phase doubler typically does not have current balance and is not compatible with Intersil’s multi-phase controllers.

## Precharged Start-up Capability

Since the ISL6398 uses 5V bias and the high efficiency power train mostly uses 5V driver, this makes the ISL6398 digital power system much more robust and reliable for power-up and down as well as precharged start-up, which is typically hardly managed for a system that deals with 3.3V, 5V, and 12V supplies.

## Switching Frequency

The VR’s switching frequency is programmable from 120kHz to 2.025MHz via PMBus. It is 15kHz/step with a slew rate of step/20µs.

## Current Sensing

The ISL6398 senses current continuously for fast response. The ISL6398 supports inductor DCR sensing, or resistive sensing techniques. The associated channel current sense amplifier uses the ISEN inputs to reproduce a signal proportional to the inductor current, $I_L$. The sense current, $I_{SEN}$, is proportional to the inductor current. The sensed current is used for current balance, load-line regulation, and overcurrent protection.

The internal circuitry, shown in Figures 4 and 5, represents one channel of the VR output, respectively. The ISEN± circuitry is repeated for each channel, but may not be active depending on the status of the PWM[6:2] pins, as described in "PWM Operation" on page 17. The input bias current of the current sensing amplifier is typically 25nA; less than 8kΩ input impedance is preferred to minimized the offset error, i.e., a larger C value as needed.

### INDUCTOR DCR SENSING

An inductor's winding is characteristic of a distributed resistance, as measured by the Direct Current Resistance (DCR) parameter. Consider the inductor DCR as a separate lumped quantity, as shown in Figure 4. The channel current $I_L$, flowing through the inductor, will also pass through the DCR. Equation 4 shows the S-domain equivalent voltage across the inductor $V_L$.

$$V_L(s) = I_L \cdot (s \cdot L + DCR) \quad \text{(EQ. 4)}$$

A simple R-C network across the inductor extracts the DCR voltage, as shown in Figure 4.

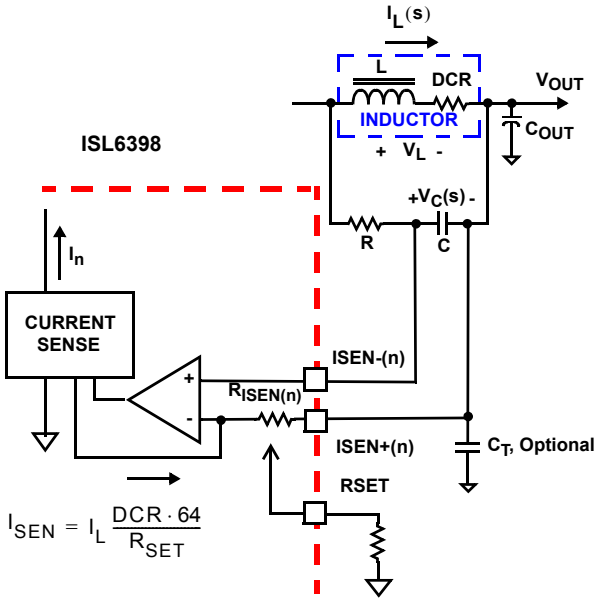


FIGURE 4. DCR SENSING CONFIGURATION

The voltage on the capacitor $V_C$, can be shown to be proportional to the channel current $I_L$(see Equation 5).

$$V_C(s) = \frac{\left(s \cdot \frac{L}{DCR} + 1\right) \cdot (DCR \cdot I_L)}{(s \cdot RC + 1)} \quad \text{(EQ. 5)}$$

If the R-C network components are selected such that the RC time constant matches the inductor time constant (R*C = L/DCR), the voltage across the capacitor $V_C$ is equal to the voltage drop across the DCR, i.e., proportional to the channel current.

With the internal low-offset current amplifier, the capacitor voltage $V_C$ is replicated across the sense resistor $R_{ISEN}$. Therefore, the current out of the ISENS+ pin, $I_{SEN}$, is proportional to the inductor current.

Equation 6 shows that the ratio of the channel current to the sensed current, $I_{SEN}$, is driven by the value of the sense resistor and the DCR of the inductor.

$$I_{SEN} = I_L \cdot \frac{DCR}{R_{ISEN}} = I_L \frac{DCR \cdot 64}{R_{SET}} \quad \text{(EQ. 6)}$$

### RESISTIVE SENSING

For more accurate current sensing, a dedicated current-sense resistor $R_{SENSE}$ in series with each output inductor can serve as the current sense element (see Figure 5). This technique however reduces overall converter efficiency due to the additional power loss on the current sense element $R_{SENSE}$.

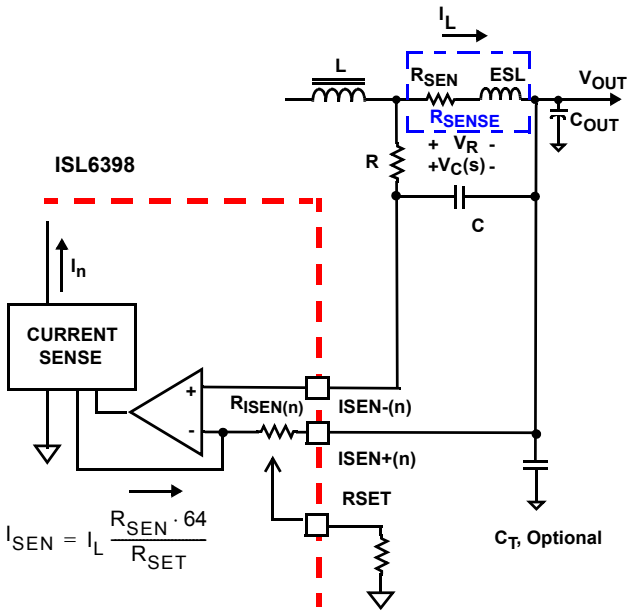


FIGURE 5. SENSE RESISTOR IN SERIES WITH INDUCTORS

A current sensing resistor has a distributed parasitic inductance, known as ESL (equivalent series inductance, typically less than 1nH) parameter. Consider the ESL as a separate lumped quantity, as shown in Figure 5. The channel current $I_L$, flowing through the inductor, will also pass through the ESL. Equation 7 shows the s-domain equivalent voltage across the resistor $V_R$.

$$V_R(s) = I_L \cdot (s \cdot ESL + R_{SEN}) \quad \text{(EQ. 7)}$$

A simple R-C network across the current sense resistor extracts the $R_{SEN}$ voltage, as shown in Figure 5.

The voltage on the capacitor $V_C$, can be shown to be proportional to the channel current $I_L$ (see Equation 8).

$$V_C(s) = \frac{\left(s \cdot \frac{ESL}{R_{SEN}} + 1\right) \cdot (R_{SEN} \cdot I_L)}{(s \cdot RC + 1)} \quad \text{(EQ. 8)}$$

If the R-C network components are selected such that the RC time constant matches the ESL-$R_{SEN}$ time constant ($R*C = ESL/R_{SEN}$), the voltage across the capacitor $V_C$ is equal to the voltage drop across the $R_{SEN}$, i.e., proportional to the channel current. As an example, a typical 1mΩ sense resistor can use R = 348 and C = 820pF for the matching. Figures 6 and 7 show the sensed waveforms with and without matching RC when using resistive sense.



FIGURE 6. VOLTAGE ACROSS R WITHOUT RC



FIGURE 7. VOLTAGE ACROSS C WITH MATCHING RC

Equation 9 shows that the ratio of the channel current to the sensed current, $I_{SEN}$, is driven by the value of the sense resistor and the $R_{ISEN}$.

$$I_{SEN} = I_L \cdot \frac{R_{SEN}}{R_{ISEN}} = I_L \frac{R_{SEN} \cdot 64}{R_{SET}} \quad \text{(EQ. 9)}$$

However, the $R_{ISEN}$ resistor of each channel is integrated, while its value is determined by the $R_{SET}$ resistor. The RSET resistor value can be from 3.84kΩ to 60.4kΩ and is 64x of the required $I_{SEN}$ resistor value. Therefore, the current sense gain resistor (Integrated $R_{ISEN}$) value can be effectively set at 60Ω to 943Ω.

The inductor DCR value will increase as the temperature increases. Therefore, the sensed current will increase as the temperature of the current sense element increases. In order to compensate the temperature effect on the sensed current signal, a Negative Temperature Coefficient (NTC) resistor can be used for thermal compensation, or the integrated temperature compensation function of the ISL6398 should be utilized. The integrated temperature compensation function is described in “Temperature Compensation” on page 28.

Decoupling capacitor ($C_T$) on ISEN[6:1]- pins are optional and might be required for long sense traces and a poor layout.

## L/DCR OR ESL/$R_{SEN}$ MATCHING

Assuming the compensator design is correct, Figure 8 shows the expected load transient response waveforms if L/DCR or ESL/$R_{SEN}$ is matching the R-C time constant. When the load current $I_{OUT}$ has a square change, the output voltage $V_{OUT}$ also has a square response, except for the overshoot at load release. However, there is always some PCB contact impedance of current sensing components between the two current sensing points; it hardly accounts into the L/DCR or ESL/$R_{SEN}$ matching calculation. Fine tuning the matching is necessarily done in the board level to improve overall transient performance and system reliability.

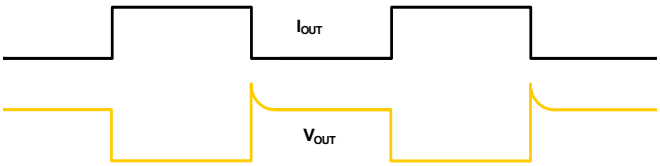


FIGURE 8. DESIRED LOAD TRANSIENT RESPONSE WAVEFORMS

If the R-C timing constant is too large or too small, $V_C(s)$ will not accurately represent real-time $I_{OUT}(s)$ and will worsen the transient response. Figure 9 shows the load transient response when the R-C timing constant is too small. $V_{OUT}$ will sag excessively upon load insertion and may create a system failure or early overcurrent trip. Figure 10 shows the transient response when the R-C timing constant is too large. $V_{OUT}$ is sluggish in drooping to its final value. There will be excessive overshoot if load insertion occurs during this time, which may potentially hurt the reliability.

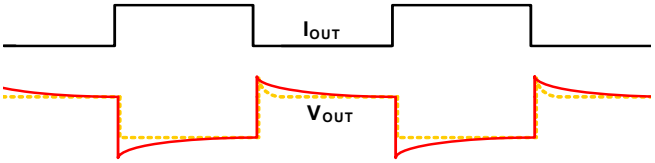


FIGURE 9. LOAD TRANSIENT RESPONSE WHEN R-C TIME CONSTANT IS TOO SMALL

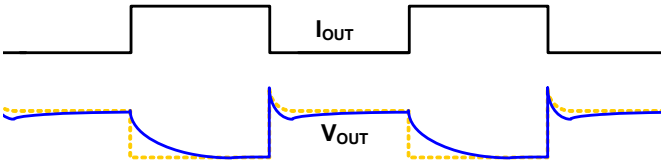


FIGURE 10. LOAD TRANSIENT RESPONSE WHEN R-C TIME CONSTANT IS TOO LARGE

## $R_{SET}$ AND L/DCR MATCHING FOR COUPLED INDUCTOR

The current sense circuitry operates in a very similar manner for negative current feedback, where inductor current is flowing from the output of the regulator to the PHASE node, opposite of flow pictured in Figures 4 and 5. However, the range of proper operation with negative current sensing has a limitation. The worst-case peak-to-peak inductor ripple current should be kept less than 80% of the OCP trip point (~80µA). Care should be taken to avoid operation with negative current feedback exceeding this threshold, as this may lead to momentary loss of current balance between phases and disruption of normal circuit operation. Note that the negative current can especially affect coupled inductor designs, where the effective inductance is the leakage between the two channels, much lower than the specified mutual inductance (LM) and self inductance (L). To limit the impact, a higher RSET value (1.5x to 2x) is often used to reduce the effective negative current seen by the controller in coupled inductor designs.

Refer to Intersil’s application note, AN1268 for detailed coupled inductor discussion and ripple current calculation.

As explained in application note, AN1268 the leakage inductance (not self inductance or mutual inductance) of the coupled inductor should be used as the inductance in the time constant calculation. Therefore, the leakage, self, and mutual inductance should be well controlled for a good coupled inductor design.

## Channel-current Balance

The sensed current $I_n$ from each active channel is summed together and divided by the number of active channels. The resulting average current $I_{AVG}$ provides a measure of the total load current. Channel current balance is achieved by comparing the sensed current of each channel to the average current to make an appropriate adjustment to the PWM duty cycle of each channel with Intersil's patented current-balance method.

Channel current balance is essential in achieving the thermal advantage of multiphase operation. With good current balance, the power loss is equally dissipated over multiple devices and a greater area. The ISL6398 can adjust the thermal/current balance of the VR via registers F7 to FC.

## Voltage Regulation (5mV and 10mV Mode)

The compensation network shown in Figure 11 assures that the steady-state error in the output voltage is limited only to the error in the reference voltage (DAC and OFFSET) and droop current source, remote sense, and error amplifier.

The sensed average current $I_{DROOP}$ is tied to FB internally and will develop a voltage drop across the resistor between FB and $V_{OUT}$ for droop control. This current can be disconnected from the FB node via PMBus for non-droop applications.

The output of the error amplifier, $V_{COMP}$, is compared to the internal sawtooth waveforms to generate the PWM signals. The PWM signals control the timing of the Intersil MOSFET drivers and regulate the converter output to the specified reference voltage.

For remote sensing, connect the load sensing pins to the non-inverting input, VSEN, and inverting input, RGND, of the error amplifier. This configuration effectively removes the voltage error encountered when measuring the output voltage relative to the local controller ground reference point.

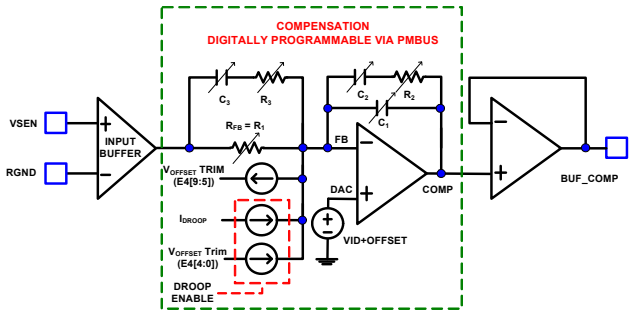


FIGURE 11. OUTPUT VOLTAGE AND LOAD-LINE REGULATION

A digital-to-analog converter (DAC) generates a reference voltage, which is programmable via PMBus bus. The DAC decodes the PMBus set VID command into one of the discrete voltages shown in Table 4. In addition, the output voltage can be margined in ±5mV step between -640mV and 635mV, ±10mV step between -1280mV and 1270mV, as shown in Table 4. For a finer than 5mV or 10mV offset, a large ratio resistor divider can be placed on the VSEN pin between the output and GND for positive offset or $V_{CC}$ for negative offset, as in Figure 12. The VR operational mode is programmed by the "VRSEL_ADDR" pin. Table 3 shows the difference between 5mV and 10mV modes. VOUT_MAX and VBOOT registers must be programmed accordingly to support each mode, otherwise, the VR might NOT power-up correctly.

Furthermore, the PMBus register (E4h[9:5]) can program the additional droop current (range from -4µA to 3.75µA) into $R_1$ for DC offset calibration; a negative current will yield a negative offset, while a positive current will yield a positive offset: OFFSET = $R_1$* I(E4[9:5]). In droop applications, E4[4:0] can add current out of IMON pin and droop current through $R_1$ simultaneously (the negative current yields positive offset, and vice versa).

TABLE 3. 5mV vs 10mV DAC Resolution

| MODE (VRSEL) | MAXIMUM DAC (V) | VOUT_MAX (24h) | MAXIMUM VBOOT ("BT" pin) | MAXIMUM VBOOT (E6) |
|---|---|---|---|---|
| 5mV | 2.155 | Table 18 | 1.50 | 1.52 |
| 10mV | 3.011 | Table 4 Follow DAC | 3.00 | 3.04 |

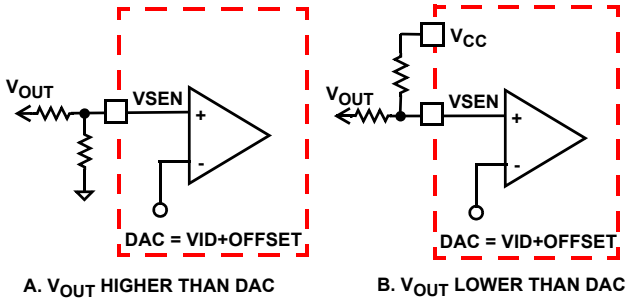


A. $V_{OUT}$ HIGHER THAN DAC B. $V_{OUT}$ LOWER THAN DAC

FIGURE 12. EXTERNAL PROGRAMMABLE REGULATION

TABLE 4. 5mV OR 10mV VID 8-BIT

| BINARY CODE | HEX CODE | 5mV VID (V) | 10mV VID (V) | 5mV OFFSET (mV) | 10mV OFFSET (mV) |
|---|---|---|---|---|---|
| 00000000 | 0 | OFF | OFF | 0 | 0 |
| 00000001 | 1 | 0.250 | 0.500 | 5 | 10 |
| 00000010 | 2 | 0.255 | 0.510 | 10 | 20 |
| 00000011 | 3 | 0.260 | 0.520 | 15 | 30 |
| 00000100 | 4 | 0.265 | 0.530 | 20 | 40 |
| 00000101 | 5 | 0.270 | 0.540 | 25 | 50 |
| 00000110 | 6 | 0.275 | 0.550 | 30 | 60 |
| 00000111 | 7 | 0.280 | 0.560 | 35 | 70 |
| 00001000 | 8 | 0.285 | 0.570 | 40 | 80 |
| 00001001 | 9 | 0.290 | 0.580 | 45 | 90 |
| 00001010 | A | 0.295 | 0.590 | 50 | 100 |
| 00001011 | B | 0.300 | 0.600 | 55 | 110 |
| 00001100 | C | 0.305 | 0.610 | 60 | 120 |
| 00001101 | D | 0.310 | 0.620 | 65 | 130 |

TABLE 4. 5mV OR 10mV VID 8-BIT (Continued)

| BINARY CODE | HEX CODE | 5mV VID (V) | 10mV VID (V) | 5mV OFFSET (mV) | 10mV OFFSET (mV) |
|---|---|---|---|---|---|
| 00001110 | E | 0.315 | 0.630 | 70 | 140 |
| 00001111 | F | 0.320 | 0.640 | 75 | 150 |
| 00010000 | 10 | 0.325 | 0.650 | 80 | 160 |
| 00010001 | 11 | 0.330 | 0.660 | 85 | 170 |
| 00010010 | 12 | 0.335 | 0.670 | 90 | 180 |
| 00010011 | 13 | 0.340 | 0.680 | 95 | 190 |
| 00010100 | 14 | 0.345 | 0.690 | 100 | 200 |
| 00010101 | 15 | 0.350 | 0.700 | 105 | 210 |
| 00010110 | 16 | 0.355 | 0.710 | 110 | 220 |
| 00010111 | 17 | 0.360 | 0.720 | 115 | 230 |
| 00011000 | 18 | 0.365 | 0.730 | 120 | 240 |
| 00011001 | 19 | 0.370 | 0.740 | 125 | 250 |
| 00011010 | 1A | 0.375 | 0.750 | 130 | 260 |
| 00011011 | 1B | 0.380 | 0.760 | 135 | 270 |
| 00011100 | 1C | 0.385 | 0.770 | 140 | 280 |
| 00011101 | 1D | 0.390 | 0.780 | 145 | 290 |
| 00011110 | 1E | 0.395 | 0.790 | 150 | 300 |
| 00011111 | 1F | 0.400 | 0.800 | 155 | 310 |
| 00100000 | 20 | 0.405 | 0.810 | 160 | 320 |
| 00100001 | 21 | 0.410 | 0.820 | 165 | 330 |
| 00100010 | 22 | 0.415 | 0.830 | 170 | 340 |
| 00100011 | 23 | 0.420 | 0.840 | 175 | 350 |
| 00100100 | 24 | 0.425 | 0.850 | 180 | 360 |
| 00100101 | 25 | 0.430 | 0.860 | 185 | 370 |
| 00100110 | 26 | 0.435 | 0.870 | 190 | 380 |
| 00100111 | 27 | 0.440 | 0.880 | 195 | 390 |
| 00101000 | 28 | 0.445 | 0.890 | 200 | 400 |
| 00101001 | 29 | 0.450 | 0.900 | 205 | 410 |
| 00101010 | 2A | 0.455 | 0.910 | 210 | 420 |
| 00101011 | 2B | 0.460 | 0.920 | 215 | 430 |
| 00101100 | 2C | 0.465 | 0.930 | 220 | 440 |
| 00101101 | 2D | 0.470 | 0.940 | 225 | 450 |
| 00101110 | 2E | 0.475 | 0.950 | 230 | 460 |
| 00101111 | 2F | 0.480 | 0.960 | 235 | 470 |
| 00110000 | 30 | 0.485 | 0.970 | 240 | 480 |
| 00110001 | 31 | 0.490 | 0.980 | 245 | 490 |
| 00110010 | 32 | 0.495 | 0.990 | 250 | 500 |
| 00110011 | 33 | 0.500 | 1.000 | 255 | 510 |
| 00110100 | 34 | 0.505 | 1.010 | 260 | 520 |
| 00110101 | 35 | 0.510 | 1.020 | 265 | 530 |
| 00110110 | 36 | 0.515 | 1.030 | 270 | 540 |
| 00110111 | 37 | 0.520 | 1.040 | 275 | 550 |
| 00111000 | 38 | 0.525 | 1.050 | 280 | 560 |
| 00111001 | 39 | 0.530 | 1.060 | 285 | 570 |
| 00111010 | 3A | 0.535 | 1.070 | 290 | 580 |

TABLE 4. 5mV OR 10mV VID 8-BIT (Continued)

| BINARY CODE | HEX CODE | 5mV VID (V) | 10mV VID (V) | 5mV OFFSET (mV) | 10mV OFFSET (mV) |
|---|---|---|---|---|---|
| 00111011 | 3B | 0.540 | 1.080 | 295 | 590 |
| 00111100 | 3C | 0.545 | 1.090 | 300 | 600 |
| 00111101 | 3D | 0.550 | 1.100 | 305 | 610 |
| 00111110 | 3E | 0.555 | 1.110 | 310 | 620 |
| 00111111 | 3F | 0.560 | 1.120 | 315 | 630 |
| 01000000 | 40 | 0.565 | 1.130 | 320 | 640 |
| 01000001 | 41 | 0.570 | 1.140 | 325 | 650 |
| 01000010 | 42 | 0.575 | 1.150 | 330 | 660 |
| 01000011 | 43 | 0.580 | 1.160 | 335 | 670 |
| 01000100 | 44 | 0.585 | 1.170 | 340 | 680 |
| 01000101 | 45 | 0.590 | 1.180 | 345 | 690 |
| 01000110 | 46 | 0.595 | 1.190 | 350 | 700 |
| 01000111 | 47 | 0.600 | 1.200 | 355 | 710 |
| 01001000 | 48 | 0.605 | 1.210 | 360 | 720 |
| 01001001 | 49 | 0.610 | 1.220 | 365 | 730 |
| 01001010 | 4A | 0.615 | 1.230 | 370 | 740 |
| 01001011 | 4B | 0.620 | 1.240 | 375 | 750 |
| 01001100 | 4C | 0.625 | 1.250 | 380 | 760 |
| 01001101 | 4D | 0.630 | 1.260 | 385 | 770 |
| 01001110 | 4E | 0.635 | 1.270 | 390 | 780 |
| 01001111 | 4F | 0.640 | 1.280 | 395 | 790 |
| 01010000 | 50 | 0.645 | 1.290 | 400 | 800 |
| 01010001 | 51 | 0.650 | 1.300 | 405 | 810 |
| 01010010 | 52 | 0.655 | 1.310 | 410 | 820 |
| 01010011 | 53 | 0.660 | 1.320 | 415 | 830 |
| 01010100 | 54 | 0.665 | 1.330 | 420 | 840 |
| 01010101 | 55 | 0.670 | 1.340 | 425 | 850 |
| 01010110 | 56 | 0.675 | 1.350 | 430 | 860 |
| 01010111 | 57 | 0.680 | 1.360 | 435 | 870 |
| 01011000 | 58 | 0.685 | 1.370 | 440 | 880 |
| 01011001 | 59 | 0.690 | 1.380 | 445 | 890 |
| 01011010 | 5A | 0.695 | 1.390 | 450 | 900 |
| 01011011 | 5B | 0.700 | 1.400 | 455 | 910 |
| 01011100 | 5C | 0.705 | 1.410 | 460 | 920 |
| 01011101 | 5D | 0.710 | 1.420 | 465 | 930 |
| 01011110 | 5E | 0.715 | 1.430 | 470 | 940 |
| 01011111 | 5F | 0.720 | 1.440 | 475 | 950 |
| 01100000 | 60 | 0.725 | 1.450 | 480 | 960 |
| 01100001 | 61 | 0.730 | 1.460 | 485 | 970 |
| 01100010 | 62 | 0.735 | 1.470 | 490 | 980 |
| 01100011 | 63 | 0.740 | 1.480 | 495 | 990 |
| 01100100 | 64 | 0.745 | 1.490 | 500 | 1000 |
| 01100101 | 65 | 0.750 | 1.500 | 505 | 1010 |
| 01100110 | 66 | 0.755 | 1.510 | 510 | 1020 |
| 01100111 | 67 | 0.760 | 1.520 | 515 | 1030 |

TABLE 4. 5mV OR 10mV VID 8-BIT (Continued)

| BINARY CODE | HEX CODE | 5mV VID (V) | 10mV VID (V) | 5mV OFFSET (mV) | 10mV OFFSET (mV) |
|---|---|---|---|---|---|
| 01101000 | 68 | 0.765 | 1.530 | 520 | 1040 |
| 01101001 | 69 | 0.770 | 1.540 | 525 | 1050 |
| 01101010 | 6A | 0.775 | 1.550 | 530 | 1060 |
| 01101011 | 6B | 0.780 | 1.560 | 535 | 1070 |
| 01101100 | 6C | 0.785 | 1.570 | 540 | 1080 |
| 01101101 | 6D | 0.790 | 1.580 | 545 | 1090 |
| 01101110 | 6E | 0.795 | 1.590 | 550 | 1100 |
| 01101111 | 6F | 0.800 | 1.600 | 555 | 1110 |
| 01110000 | 70 | 0.805 | 1.610 | 560 | 1120 |
| 01110001 | 71 | 0.810 | 1.620 | 565 | 1130 |
| 01110010 | 72 | 0.815 | 1.630 | 570 | 1140 |
| 01110011 | 73 | 0.820 | 1.640 | 575 | 1150 |
| 01110100 | 74 | 0.825 | 1.650 | 580 | 1160 |
| 01110101 | 75 | 0.830 | 1.660 | 585 | 1170 |
| 01110110 | 76 | 0.835 | 1.670 | 590 | 1180 |
| 01110111 | 77 | 0.840 | 1.680 | 595 | 1190 |
| 01111000 | 78 | 0.845 | 1.690 | 600 | 1200 |
| 01111001 | 79 | 0.850 | 1.700 | 605 | 1210 |
| 01111010 | 7A | 0.855 | 1.710 | 610 | 1220 |
| 01111011 | 7B | 0.860 | 1.720 | 615 | 1230 |
| 01111100 | 7C | 0.865 | 1.730 | 620 | 1240 |
| 01111101 | 7D | 0.870 | 1.740 | 625 | 1250 |
| 01111110 | 7E | 0.875 | 1.750 | 630 | 1260 |
| 01111111 | 7F | 0.880 | 1.760 | 635 | 1270 |
| 10000000 | 80 | 0.885 | 1.770 | -640 | -1280 |
| 10000001 | 81 | 0.890 | 1.780 | -635 | -1270 |
| 10000010 | 82 | 0.895 | 1.790 | -630 | -1260 |
| 10000011 | 83 | 0.900 | 1.800 | -625 | -1250 |
| 10000100 | 84 | 0.905 | 1.810 | -620 | -1240 |
| 10000101 | 85 | 0.910 | 1.820 | -615 | -1230 |
| 10000110 | 86 | 0.915 | 1.830 | -610 | -1220 |
| 10000111 | 87 | 0.920 | 1.840 | -605 | -1210 |
| 10001000 | 88 | 0.925 | 1.850 | -600 | -1200 |
| 10001001 | 89 | 0.930 | 1.860 | -595 | -1190 |
| 10001010 | 8A | 0.935 | 1.870 | -590 | -1180 |
| 10001011 | 8B | 0.940 | 1.880 | -585 | -1170 |
| 10001100 | 8C | 0.945 | 1.890 | -580 | -1160 |
| 10001101 | 8D | 0.950 | 1.900 | -575 | -1150 |
| 10001110 | 8E | 0.955 | 1.910 | -570 | -1140 |
| 10001111 | 8F | 0.960 | 1.920 | -565 | -1130 |
| 10010000 | 90 | 0.965 | 1.930 | -560 | -1120 |
| 10010001 | 91 | 0.970 | 1.940 | -555 | -1110 |
| 10010010 | 92 | 0.975 | 1.950 | -550 | -1100 |
| 10010011 | 93 | 0.980 | 1.960 | -545 | -1090 |
| 10010100 | 94 | 0.985 | 1.970 | -540 | -1080 |

TABLE 4. 5mV OR 10mV VID 8-BIT (Continued)

| BINARY CODE | HEX CODE | 5mV VID (V) | 10mV VID (V) | 5mV OFFSET (mV) | 10mV OFFSET (mV) |
|---|---|---|---|---|---|
| 10010101 | 95 | 0.990 | 1.980 | -535 | -1070 |
| 10010110 | 96 | 0.995 | 1.990 | -530 | -1060 |
| 10010111 | 97 | 1.000 | 2.000 | -525 | -1050 |
| 10011000 | 98 | 1.005 | 2.010 | -520 | -1040 |
| 10011001 | 99 | 1.010 | 2.020 | -515 | -1030 |
| 10011010 | 9A | 1.015 | 2.030 | -510 | -1020 |
| 10011011 | 9B | 1.020 | 2.040 | -505 | -1010 |
| 10011100 | 9C | 1.025 | 2.050 | -500 | -1000 |
| 10011101 | 9D | 1.030 | 2.060 | -495 | -990 |
| 10011110 | 9E | 1.035 | 2.070 | -490 | -980 |
| 10011111 | 9F | 1.040 | 2.080 | -485 | -970 |
| 10100000 | A0 | 1.045 | 2.090 | -480 | -960 |
| 10100001 | A1 | 1.050 | 2.100 | -475 | -950 |
| 10100010 | A2 | 1.055 | 2.110 | -470 | -940 |
| 10100011 | A3 | 1.060 | 2.120 | -465 | -930 |
| 10100100 | A4 | 1.065 | 2.130 | -460 | -920 |
| 10100101 | A5 | 1.070 | 2.140 | -455 | -910 |
| 10100110 | A6 | 1.075 | 2.150 | -450 | -900 |
| 10100111 | A7 | 1.080 | 2.160 | -445 | -890 |
| 10101000 | A8 | 1.085 | 2.170 | -440 | -880 |
| 10101001 | A9 | 1.090 | 2.180 | -435 | -870 |
| 10101010 | AA | 1.095 | 2.190 | -430 | -860 |
| 10101011 | AB | 1.100 | 2.200 | -425 | -850 |
| 10101100 | AC | 1.105 | 2.210 | -420 | -840 |
| 10101101 | AD | 1.110 | 2.220 | -415 | -830 |
| 10101110 | AE | 1.115 | 2.230 | -410 | -820 |
| 10101111 | AF | 1.120 | 2.240 | -405 | -810 |
| 10110000 | B0 | 1.125 | 2.250 | -400 | -800 |
| 10110001 | B1 | 1.130 | 2.260 | -395 | -790 |
| 10110010 | B2 | 1.135 | 2.270 | -390 | -780 |
| 10110011 | B3 | 1.140 | 2.280 | -385 | -770 |
| 10110100 | B4 | 1.145 | 2.290 | -380 | -760 |
| 10110101 | B5 | 1.150 | 2.300 | -375 | -750 |
| 10110110 | B6 | 1.155 | 2.310 | -370 | -740 |
| 10110111 | B7 | 1.160 | 2.320 | -365 | -730 |
| 10111000 | B8 | 1.165 | 2.330 | -360 | -720 |
| 10111001 | B9 | 1.170 | 2.340 | -355 | -710 |
| 10111010 | BA | 1.175 | 2.350 | -350 | -700 |
| 10111011 | BB | 1.180 | 2.360 | -345 | -690 |
| 10111100 | BC | 1.185 | 2.370 | -340 | -680 |
| 10111101 | BD | 1.190 | 2.380 | -335 | -670 |
| 10111110 | BE | 1.195 | 2.390 | -330 | -660 |
| 10111111 | BF | 1.200 | 2.400 | -325 | -650 |
| 11000000 | C0 | 1.205 | 2.410 | -320 | -640 |
| 11000001 | C1 | 1.210 | 2.420 | -315 | -630 |

TABLE 4. 5mV OR 10mV VID 8-BIT (Continued)

| BINARY CODE | HEX CODE | 5mV VID (V) | 10mV VID (V) | 5mV OFFSET (mV) | 10mV OFFSET (mV) |
|---|---|---|---|---|---|
| 11000010 | C2 | 1.215 | 2.430 | -310 | -620 |
| 11000011 | C3 | 1.220 | 2.440 | -305 | -610 |
| 11000100 | C4 | 1.225 | 2.450 | -300 | -600 |
| 11000101 | C5 | 1.230 | 2.460 | -295 | -590 |
| 11000110 | C6 | 1.235 | 2.470 | -290 | -580 |
| 11000111 | C7 | 1.240 | 2.480 | -285 | -570 |
| 11001000 | C8 | 1.245 | 2.490 | -280 | -560 |
| 11001001 | C9 | 1.250 | 2.500 | -275 | -550 |
| 11001010 | CA | 1.255 | 2.510 | -270 | -540 |
| 11001011 | CB | 1.260 | 2.520 | -265 | -530 |
| 11001100 | CC | 1.265 | 2.530 | -260 | -520 |
| 11001101 | CD | 1.270 | 2.540 | -255 | -510 |
| 11001110 | CE | 1.275 | 2.550 | -250 | -500 |
| 11001111 | CF | 1.280 | 2.560 | -245 | -490 |
| 11010000 | D0 | 1.285 | 2.570 | -240 | -480 |
| 11010001 | D1 | 1.290 | 2.580 | -235 | -470 |
| 11010010 | D2 | 1.295 | 2.590 | -230 | -460 |
| 11010011 | D3 | 1.300 | 2.600 | -225 | -450 |
| 11010100 | D4 | 1.305 | 2.610 | -220 | -440 |
| 11010101 | D5 | 1.310 | 2.620 | -215 | -430 |
| 11010110 | D6 | 1.315 | 2.630 | -210 | -420 |
| 11010111 | D7 | 1.320 | 2.640 | -205 | -410 |
| 11011000 | D8 | 1.325 | 2.650 | -200 | -400 |
| 11011001 | D9 | 1.330 | 2.660 | -195 | -390 |
| 11011010 | DA | 1.335 | 2.670 | -190 | -380 |
| 11011011 | DB | 1.340 | 2.680 | -185 | -370 |
| 11011100 | DC | 1.345 | 2.690 | -180 | -360 |
| 11011101 | DD | 1.350 | 2.700 | -175 | -350 |
| 11011110 | DE | 1.355 | 2.710 | -170 | -340 |
| 11011111 | DF | 1.360 | 2.720 | -165 | -330 |
| 11100000 | E0 | 1.365 | 2.730 | -160 | -320 |
| 11100001 | E1 | 1.370 | 2.740 | -155 | -310 |
| 11100010 | E2 | 1.375 | 2.750 | -150 | -300 |
| 11100011 | E3 | 1.380 | 2.760 | -145 | -290 |
| 11100100 | E4 | 1.385 | 2.770 | -140 | -280 |
| 11100101 | E5 | 1.390 | 2.780 | -135 | -270 |
| 11100110 | E6 | 1.395 | 2.790 | -130 | -260 |
| 11100111 | E7 | 1.400 | 2.800 | -125 | -250 |
| 11101000 | E8 | 1.405 | 2.810 | -120 | -240 |
| 11101001 | E9 | 1.410 | 2.820 | -115 | -230 |
| 11101010 | EA | 1.415 | 2.830 | -110 | -220 |
| 11101011 | EB | 1.420 | 2.840 | -105 | -210 |
| 11101100 | EC | 1.425 | 2.850 | -100 | -200 |
| 11101101 | ED | 1.430 | 2.860 | -95 | -190 |

TABLE 4. 5mV OR 10mV VID 8-BIT (Continued)

| BINARY CODE | HEX CODE | 5mV VID (V) | 10mV VID (V) | 5mV OFFSET (mV) | 10mV OFFSET (mV) |
|---|---|---|---|---|---|
| 11101110 | EE | 1.435 | 2.870 | -90 | -180 |
| 11101111 | EF | 1.440 | 2.880 | -85 | -170 |
| 11110000 | F0 | 1.445 | 2.890 | -80 | -160 |
| 11110001 | F1 | 1.450 | 2.900 | -75 | -150 |
| 11110010 | F2 | 1.455 | 2.910 | -70 | -140 |
| 11110011 | F3 | 1.460 | 2.920 | -65 | -130 |
| 11110100 | F4 | 1.465 | 2.930 | -60 | -120 |
| 11110101 | F5 | 1.470 | 2.940 | -55 | -110 |
| 11110110 | F6 | 1.475 | 2.950 | -50 | -100 |
| 11110111 | F7 | 1.480 | 2.960 | -45 | -90 |
| 11111000 | F8 | 1.485 | 2.970 | -40 | -80 |
| 11111001 | F9 | 1.490 | 2.980 | -35 | -70 |
| 11111010 | FA | 1.495 | 2.990 | -30 | -60 |
| 11111011 | FB | 1.500 | 3.000 | -25 | -50 |
| 11111100 | FC | 1.505 | 3.010 | -20 | -40 |
| 11111101 | FD | 1.510 | 3.020 | -15 | -30 |
| 11111110 | FE | 1.515 | 3.030 | -10 | -20 |
| 11111111 | FF | 1.520 | 3.040 | -5 | -10 |

## Load-line Regulation

Some applications require a precisely controlled output resistance. This dependence of output voltage on load current is often termed “droop” or “load-line” regulation. By adding a well controlled output impedance, the output voltage can effectively be level shifted in a direction, which works to achieve the load-line regulation required by these manufacturers.

In other cases, the designer may determine that a more cost-effective solution can be achieved by adding droop. Droop can help to reduce the output-voltage spike that results from fast load-current demand changes.

The magnitude of the spike is dictated by the ESR and ESL of the output capacitors selected. By positioning the no-load voltage level near the upper specification limit, a larger negative spike can be sustained without crossing the lower limit. By adding a well controlled output impedance, the output voltage under load can effectively be level shifted down so that a larger positive spike can be sustained without crossing the upper specification limit.

As shown in Figure 11, a current proportional to the average current of all active channels, $I_{AVG}$, flows from FB through a load-line regulation resistor $R_{FB}$, i.e., $R_1$. The resulting voltage drop across $R_{FB}$ is proportional to the output current, effectively creating an output voltage droop with a steady-state value defined, as shown in Equation 10:

$$V_{DROOP} = I_{AVG} \cdot R_{FB} \quad \text{(EQ. 10)}$$

The regulated output voltage is reduced by the droop voltage $V_{DROOP}$. The output voltage as a function of load current is derived by combining Equation 10 with the appropriate sample current expression defined by the current sense method employed, as shown in Equation 11:

$$V_{OUT} = V_{REF} - \left(\frac{I_{LOAD}}{N}\frac{R_X}{R_{ISEN}}R_{FB}\right) \quad \text{(EQ. 11)}$$

where $V_{REF}$ is the reference voltage (DAC), $I_{LOAD}$ is the total output current of the converter, $R_{ISEN}$ is the sense resistor connected to the ISEN+ pin, and $R_{FB}$ is the feedback resistor, N is the active channel number, and $R_X$ is the DCR, or $R_{SENSE}$ depending on the sensing method.

Therefore, the equivalent loadline impedance, i.e. Droop impedance, is equal to Equation 12:

$$R_{LL} = \frac{R_{FB}}{N}\frac{R_X}{R_{ISEN}} \quad \text{(EQ. 12)}$$

The major regulation error comes from the current sensing elements. To improve load-line regulation accuracy, a tight DCR tolerance of inductor or a precision sensing resistor should be considered.

In addition, the overall load-line can be programmed to fit the application needed by the PMBus registers: B0h[7:0] for Load-Line and E4h[9:5] for DC offset. Curve 3 shown in Figure 13, makes a steeper load line than the target to fully utilize the total tolerance band, reduce the output capacitor count and cost.

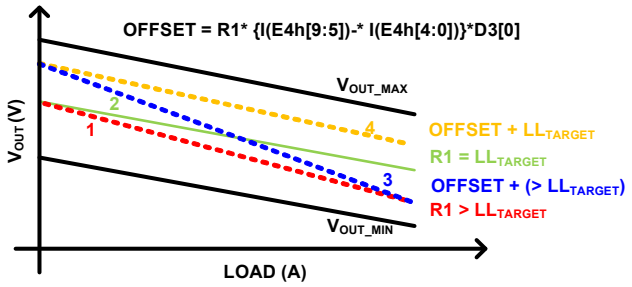


FIGURE 13. PROGRAMMABLE LOAD-LINE REGULATION

## Dynamic VID

Some applications need to make changes to their voltage as part of normal operation. They direct the core-voltage regulator to do this by making changes to the VID during regulator operation. The power management solution is required to monitor the DAC and respond to on-the-fly VID changes in a controlled manner. Supervising the safe output voltage transition within the DAC range of the load without discontinuity or disruption is a necessary function of the voltage regulator.

Sixteen different slew rates can be selected for soft-start and during Dynamic VID (DVID) transition for VR.

TABLE 5. SLEW RATE OPTIONS

| DVID F6h[4:0] | DVID SLEW RATE (MINIMUM RATE) (mV/µs) | DVID F6h[4:0] | DVID SLEW RATE (MINIMUM RATE) (mV/µs) |
|---|---|---|---|
| 0h | 0.315 | 8h | 4.0 |
| 1h | 0.625 | 9h | 4.44 |
| 2h | 1.25 | Ah | 5.0 |
| 3h | 2.5 | Bh | 5.6 |
| 4h | 2.85 | Ch | 6.66 |
| 5h | 3.07 | Dh | 8.0 |
| 6h | 3.33 | Eh | 10 |
| 7h | 3.63 | Fh | 13.25 |

During dynamic VID transition and VID step up, the overcurrent trip point increases by 140% to avoid falsely triggering OCP circuits, while the overvoltage trip point will follow the DAC+OVP level, programmable via PMBus (D8h[2:0]).

# Operation Initialization

Prior to converter initialization, proper conditions must exist on the enable inputs and $V_{CC}$. When the conditions are met, the controller begins soft-start. Once the output voltage is within the proper window of operation, VR_RDY asserts logic high.

## Enable and Disable

While in shutdown mode, the PWM outputs are held in a high-impedance state (or pulled to 40% of $V_{CC}$) to assure the drivers remain off. The following input conditions must be met before the ISL6398 is released from shutdown mode.

1. The bias voltage applied at $V_{CC}$ must reach the internal power-on reset (POR) rising threshold. Once this threshold is reached, proper operation of all aspects of the ISL6398 is guaranteed. Hysteresis between the rising and falling thresholds assure that once enabled, ISL6398 will not inadvertently turn off unless the bias voltage drops substantially (see “Electrical Specifications” on page 10).
2. The ISL6398 features an enable input (EN_PWR_CFP) for power sequencing between the controller bias voltage and another voltage rail. The enable comparator holds the ISL6398 in shutdown until the voltage at EN_PWR_CFP rises above 0.85V. The enable comparator has about 100mV of hysteresis to prevent bounce. It is important that the drivers reach their POR level before the ISL6398 becomes enabled. The schematic in Figure 14 demonstrates sequencing the ISL6398 with ISL99140 DrMOS and the ISL66xx family of Intersil MOSFET drivers.
3. The voltage on TM_EN_OTP must be higher than 1.08V (typically) to enable the controller. This pin is typically connected to the output of VTT VR. However, since the TM_EN_OTP pin is also used for thermal monitoring, it will assert SM_PMALERT# pin low due to thermal alert prior to start-up, therefore, it needs to use CLEAR_FAULT (03h) command to clear the SM_PMALERT# pin and STATUS_BYTE (78h) after power-up. There is no effect on normal operation if SM_PMALERT# and STATUS_BYTE are not used.

When all conditions previously mentioned are satisfied, the ISL6398 begins the soft-start and ramps the output voltage to the Boot Voltage set by hard-wired “BT” registers. After remaining at the boot voltage for some time, the ISL6398 reads the VID code. If the VID code is valid, ISL6398 will regulate the output to the final VID setting. If the VID code is “OFF” code, ISL6398 will remain shut down.

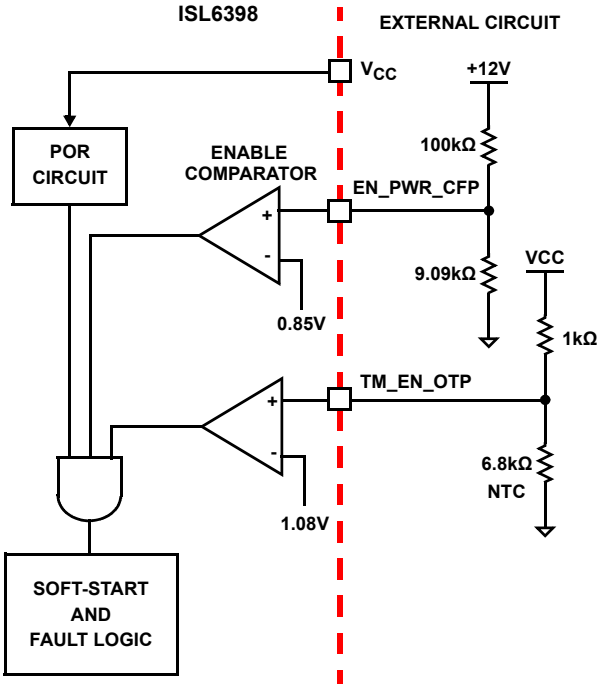


FIGURE 14. POWER SEQUENCING USING THRESHOLD-SENSITIVE ENABLE (EN) FUNCTION

## Soft-start

The ISL6398 based VR has 4 periods during soft-start, as shown in Figure 15. After $V_{CC}$, TM_EN_OTP and EN_PWR_CFP reach their POR/enable thresholds and the NVM_BANK loading time (typically 16ms, and worst case 20ms) expired, the controller will have a fixed delay period $t_{D1}$. After this delay period, the VR will begin first soft-start ramp until the output voltage reaches the $V_{BOOT}$ voltage at a fixed slew rate, as in Table 5. Then, the controller will regulate the VR voltage at $V_{BOOT}$ for another period $t_{D3}$ until PMBus sends a new VID command. If the VID code is valid, ISL6398 will initiate the second soft-start ramp at a slew rate, set by DVID command in Table 5, until the voltage reaches the new VID voltage. The soft-start time is the sum of the 4 periods, as shown in Equation 13.

$$t_{SS} = t_{D1} + t_{D2} + t_{D3} + t_{D4} \quad \text{(EQ. 13)}$$

$t_{D1}$ is a fixed delay with the typical value as 20µs. $t_{D3}$ is determined by the time to obtain a new valid VID voltage from PMBus. If the VID is valid before the output reaches the boot voltage, the output will turn around to respond to the new VID code.

During $t_{D2}$ and $t_{D4}$, the ISL6398 digitally controls the DAC voltage change at 5mV per step. The soft-start ramp time $t_{D2}$ and $t_{D4}$ can be calculated based on Equations 14 and 15:

$$t_{D2} = \frac{V_{BOOT}}{DVIDRATE}(\mu s) \quad \text{(EQ. 14)}$$

$$t_{D4} = \frac{V_{VID} - V_{BOOT}}{DVID\ RATE}(\mu s) \quad \text{(EQ. 15)}$$

For example, when the $V_{BOOT}$ is set at 1.1V and DVID slew rate is set at 5mV/µs, the first soft-start ramp time $t_{D2}$ will be around 220µs and the second soft-start ramp time $t_{D4}$ will be at maximum of 80µs if an SET_VID command for 1.5V is received after $t_{D3}$.

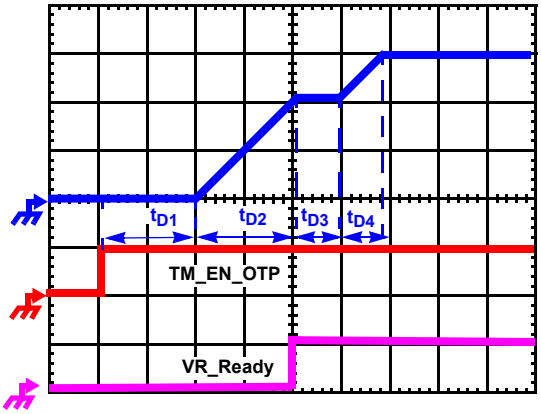


FIGURE 15. SOFT-START WAVEFORMS

## Current Sense Output

The current flowing out of the IMON pin is equal to the sensed average current inside the ISL6398. In typical applications, a resistor is placed from the IMON pin to GND to generate a voltage, which is proportional to the load current and the resistor value, as shown in Equation 16:

$$V_{IMON} = \frac{R_{IMON}}{N}\frac{R_X}{R_{ISEN}}I_{LOAD} \quad \text{(EQ. 16)}$$

where $V_{IMON}$ is the voltage at the IMON pin, $R_{IMON}$ is the resistor between the IMON pin and GND, $I_{LOAD}$ is the total output current of the converter, $R_{ISEN}$ is the sense resistor connected to the ISEN+ pin, N is the active channel number, and $R_X$ is the DC resistance of the current sense element, either the DCR of the inductor or $R_{SENSE}$ depending on the sensing method.

The resistor from the IMON pin to GND should be chosen to ensure that the voltage at the IMON pin is typically 2.5V at the maximum load current, typically corresponding to the $I_{CCMAX}$ register. The IMON voltage is linearly digitized every 88µs and stored in the READ_IOUT register (8Ch). When the IMON voltage reaches 2.5V or higher, the digitized $I_{OUT}$ will reach the maximum value of ICCMAX and the SM_PMALERT# pin is pulled low.

$$R_{IMON} = \frac{2.5V\ R_{ISEN}}{R_X}\frac{N}{I_{CC_MAX_21h}} \quad \text{(EQ. 17)}$$

A small capacitor can be placed between the IMON pin and GND to reduce the noise impact and provide averaging. If this pin is not used, tie it to GND.

To deal with layout and design variation of different platforms, the ISL6398 is intentionally trimmed to negative range at no load, thus, an offset can easily be added to calibrate the digitized IMON reading (8Ch in PMBus) whenever needed by PMBus (E4h) or the external pull-up resistor in Figure 16. Hence, the slope on the IMON pin is set by the equivalent impedance of $R_{MON1}//R_{MON2} = R_{IMON}$. Additional offset can be added by IOUT_CAL_OFFSET (E5h).

$$R_{MON2} = \frac{V_{CC} R_{IMON}}{V_{IMON_OFFSET_DESIRED}}$$

$$R_{MON1} = \frac{R_{IMON2} R_{IMON}}{R_{IMON2} - R_{IMON}} \quad \text{(EQ. 18)}$$

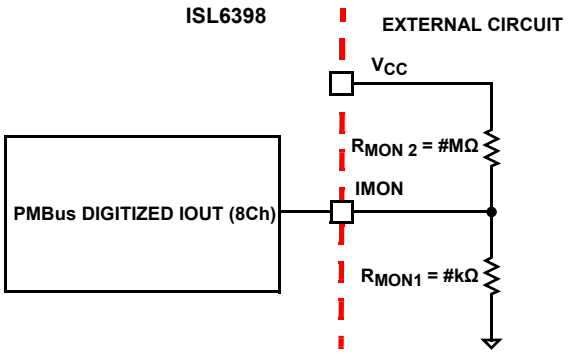


FIGURE 16. IMON NO LOAD OFFSET CALIBRATION

In addition, if the IMON pin voltage is higher than 3.0V, overcurrent shutdown will be triggered, as described in “Overcurrent Protection” on page 27.

# Fault Monitoring and Protection

The ISL6398 actively monitors output voltage and current to detect fault conditions. Fault monitors trigger protective measures to prevent damage to a microprocessor load. One common power-good indicator (VR_RDY) is provided for linking to external system monitors. The schematic in Figure 17 outlines the interaction between the fault monitors and the VR_RDY signal.

## VR_Ready Signal

The VR_RDY pin is an open-drain logic output which indicates that the soft-start period is complete and the output voltage is within the regulated range. The VR_RDY is pulled low during shutdown and releases high after a successful soft-start. VR_RDY will be pulled low when an fault (OCP, OTP, UVP, or OVP) condition is detected, or the controller is disabled by a reset from EN_PWR_CFP, TM_EN_OTP, POR, or VID OFF-code.

## Overvoltage Protection

Regardless of the VR being enabled or not, the ISL6398 overvoltage protection (OVP) circuit will be active after its POR. The OVP thresholds are different under different operation conditions. When VR is not enabled and during the soft-start intervals $t_{D1}$, the OVP threshold is programmable via PMBus (D8h[4:3]). Once the VR completes the soft-start, the OVP trip point will change to a tracking level of DAC+OVP, programmable via PMBus (D8h[2:0]).

Two actions are taken by ISL6398 to protect the load when an overvoltage condition occurs.

At the inception of an overvoltage event, all PWM outputs are commanded low instantly. This causes the Intersil drivers to turn on the lower MOSFETs and pull the output voltage below a level to avoid damaging the load. When the output voltage falls below the DAC plus 100mV, PWM signals enter a high-impedance state. The Intersil drivers respond to the high-impedance input by turning off both upper and lower MOSFETs. If the overvoltage condition reoccurs, the ISL6398 will again command the lower MOSFETs to turn on. The ISL6398 will continue to protect the load in this fashion as long as the overvoltage condition occurs.

Once an overvoltage condition is detected, the respective VR ceases the normal PWM operation and pulls its VR_Ready low until the ISL6398 is reset. Cycling the voltage $V_{CC}$ below the POR-falling threshold will reset the controller. Cycling EN_PWR_CFP or TM_EN_OTP will NOT reset the controller.

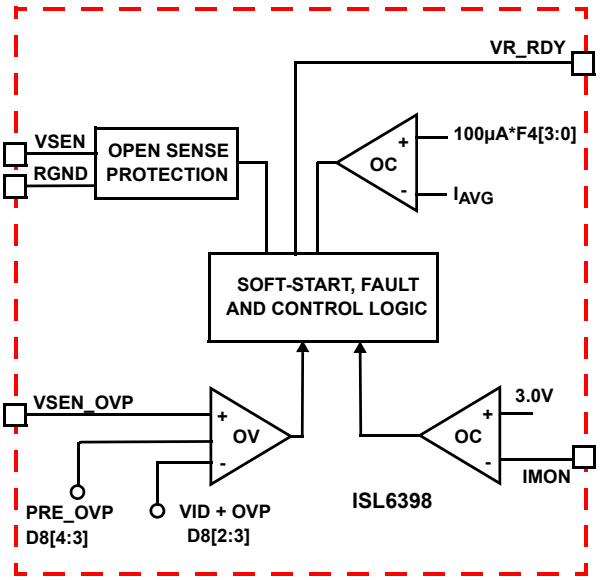


FIGURE 17. VR_RDY AND PROTECTION CIRCUITRY

In addition, the ISL6398 features open sensing protection to detect an open of the output voltage sensing as an OVP event, which suspends the controller operation. Without this protection, the VR can regulate up to maximum duty cycle and damage the load and power trains when the output sensing is broken open. Furthermore, since the regulation loop is sensed via the VSEN pin and the OVP is sensed via the VSEN_OVP pin, they are independent paths to keep output within target and below OVP level, respectively. Thus, the ISL6398 protects against a single point of failure.

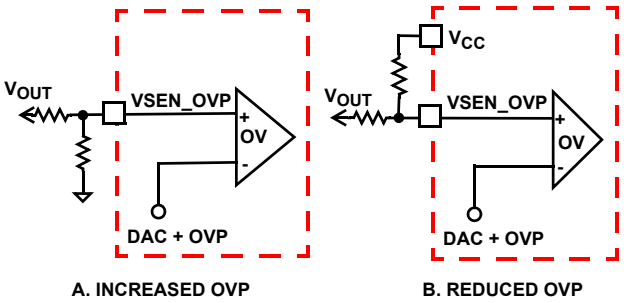


FIGURE 18. EXTERNAL PROGRAMMABLE OVP

Furthermore the regulation loop (VSEN pin) and the OVP sense (VSEN_OVP) are separated paths, the OVP level can be programmed higher or lower than the target, as in Figure 18. The OVP level cannot be scaled too close to DAC to ensure that the OVP is not triggered during transient response and start-up.

In addition, the ISL6398 also provides early OVP warning; when it is triggered, it asserts STATUS_WORD (79h Upper Byte, Bit7) and SM_PMALERT#. It however does not shutdown the system, assert STATUS_BYTE, or pull VR_RDY low. Disregard this if both STATUS_WORD and SM_PMALERT# are not used or disable OVP Warning as needed via DFh.

## Undervoltage Protection

When the output voltage drops below a level programmed by PMBus (E1[3:0]), the VR_RDY is pulled low. The controller can respond to UVP with two different options programmed by PMBus (E1[6]): 1) acts as a OCP event, hiccup the output with 9ms duration and pull VR_RDY low; or 2) acts like a PGOOD, pull VR_RDY low, monitor only. To avoid faulty triggering at transient/DVID events, the UVP delay is programmable by E1[5:4]. Furthermore, the UVP is not enabled during soft-start and also can be disabled by DF[5]. The ISL6398 also provides early UVP warning; when it is triggered, it asserts STATUS_WORD (79h Upper Byte, Bit7) and SM_PMALERT#. It however does not shutdown the system, assert STATUS_BYTE or pull VR_RDY low. Disregard this if both STATUS_WORD and SM_PMALERT# are not used or disable UVP Warning as needed via DFh.

## Overcurrent Protection

The ISL6398 has two levels of overcurrent protection. Each phase is protected from a sustained overcurrent condition by limiting its peak current, while the combined phase currents are protected on an instantaneous basis.

For the individual channel overcurrent protection, the ISL6398 continuously compares the sensed peak current (~50ns filter) signal of each channel with the reference current ($I_{CL}$, typically 125µA, programmable via F4[5:3] and F3[2:0]). If one channel current exceeds the reference current, the ISL6398 will pull PWM signal of this channel to low for the rest of the switching cycle. This PWM signal can be turned on next cycle if the sensed channel current is less than the reference current. The peak current limit of individual channels will only use cycle-by-cycle current limiting and will not trigger the converter to shut down.

In instantaneous protection mode, the ISL6398 utilizes the sensed average current $I_{AVG}$ to detect an overcurrent condition. Refer to “Current Sensing” on page 18 for more details on how the average current is measured. The average current is continually compared with a reference current (typically 100µA, programmable via F2[2:0]), as shown in Figure 17. Once the average current exceeds the reference current, a comparator triggers the converter to shut down. In addition, the current out of the IMON pin is equal to the sensed average current $I_{AVG}$. With a resistor from IMON to GND, the voltage at IMON will be proportional to the sensed average current and the resistor value. The ISL6398 continuously monitors the voltage at the IMON pin. If the voltage at the IMON pin is higher than 3.0V, a precision comparator triggers the overcurrent shutdown. Since the internal current comparator has wider tolerance than the voltage comparator, the IMON voltage comparator is the preferred one for OCP trip. Therefore, the resistor between IMON and GND can be scaled such that the overcurrent protection threshold is tripping lower than 100µA. For example, the overcurrent threshold for the sensed average current $I_{AVG}$ can be set to 95µA by using a 31.5kΩ resistor from IMON to GND. Thus, the internal 100µA comparator might only be triggered at its lower corner. However, IMON OCP trip should NOT be too far away from 125µA, which is used for cycle-by-cycle protection and inductor saturation.

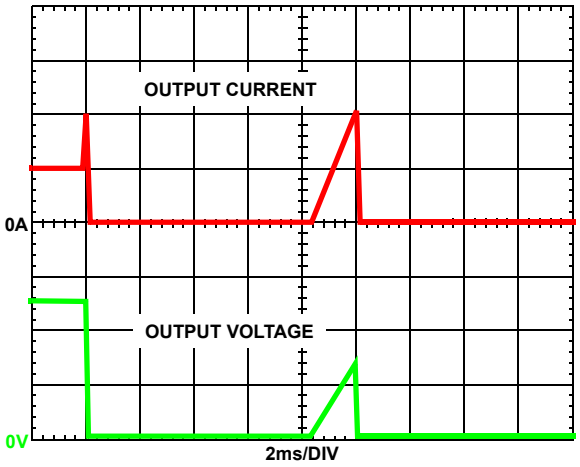


FIGURE 19. OVERCURRENT BEHAVIOR IN HICCUP MODE
$F_{SW}$ = 500kHz

At the beginning of overcurrent shutdown, the controller places all PWM signals in a high-impedance state, commanding the Intersil MOSFET driver ICs to turn off both upper and lower MOSFETs. The system remains in this state a period of 9ms. If the controller is still enabled at the end of this wait period, it will attempt a soft-start. If the fault remains, the trip-retry cycles will continue indefinitely (as shown in Figure 19) until either controller is disabled or the fault is cleared. Note that the energy delivered during trip-retry cycling is much less than during full-load operation, so there is no thermal hazard during this kind of operation.

## Thermal Monitoring (VR_HOT#)

VR_HOT# indicates the temperature status of the voltage regulator. VR_HOT# is an open-drain output, and an external pull-up resistor is required. This signal is valid only after the controller is enabled.

The VR_HOT# signal can be used to inform the system that the temperature of the voltage regulator is too high.

The block diagram of thermal monitoring function is shown in Figure 20. One NTC resistor should be placed close to the respective power stage of the voltage regulator VR to sense the operational temperature, and pull-up resistors are needed to form the voltage dividers for the TM pins. As the temperature of the power stage increases, the resistance of the NTC will reduce, resulting in the reduced voltage at the TM pin. Figure 21 shows the TM voltage over the temperature for a typical design with a recommended 6.8kΩ NTC (P/N: NTHS0805N02N6801 from Vishay, b = 3477) and 1kΩ resistor $R_{TM}$. It is recommended to use those resistors for the accurate temperature compensation since the internal thermal digital code is developed based upon these two components. If a different value is used, the temperature coefficient must be close to 3477 and $R_{TM}$ must be scaled accordingly. For instance, NTC = 10kΩ (b = 3477), then $R_{TM}$ should be 10kΩ/6.8kΩ*1kΩ = 1.47kΩ.

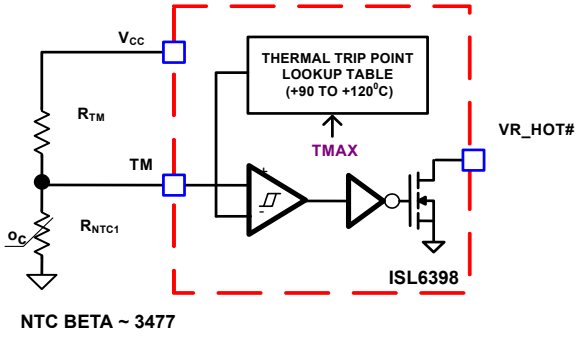


FIGURE 20. BLOCK DIAGRAM OF THERMAL MONITORING FUNCTION

There is a comparator with hysteresis to compare the TM pin voltage to the threshold set by the TMAX register (programmable via PMBus E8[2:0]) for VR_HOT# signal. With TMAX set at +100°C, the VR_HOT# signal is pulled to GND when TM voltage is lower than 39.12% of $V_{CC}$ voltage, and is open (pulled high through TM) when TM voltage increases to above 40.98% of $V_{CC}$ voltage. The comparator trip point will be programmable by TMAX values. Figure 21 shows the operation of those signals.

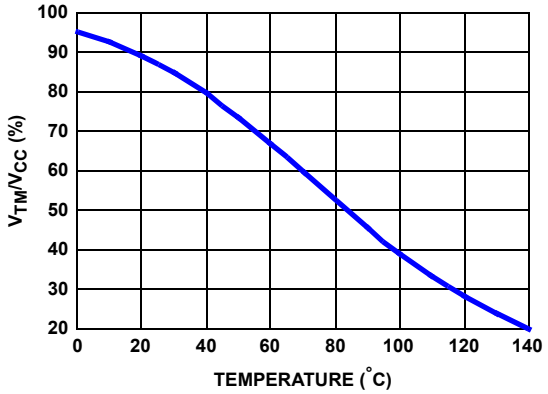


FIGURE 21. THE RATIO OF TM VOLTAGE TO NTC TEMPERATURE WITH RECOMMENDED PARTS

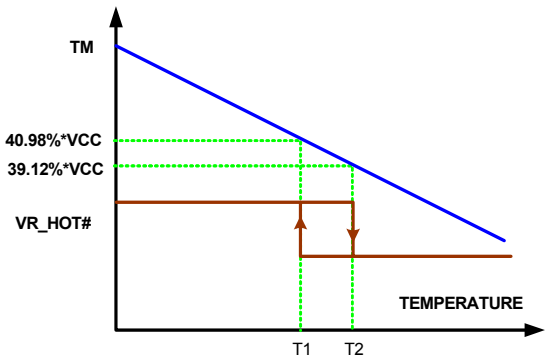


FIGURE 22. VR_HOT# SIGNAL (TMAX = +100°C) vs TM VOLTAGE

Based on the NTC temperature characteristics and the desired threshold of the VR_HOT# signal, the pull-up resistor $R_{TM}$ of TM pin is given by Equation 19:

$$R_{TM} = 1.557 \times R_{NTC(T2)} \quad \text{(EQ. 19)}$$

$R_{NTC(T2)}$ is the NTC resistance at the VR_HOT# threshold temperature T2. The VR_HOT# is de-asserted at temperature T1, as shown in Table 6. The NTC directly senses the temperature of the PCB and not the exact temperature of the hottest component on the board due to airflow and varied thermal impedance. Therefore, the user should select a lower TMAX number, depending upon the mismatch between NTC and the hottest components, than such component to guarantee a safe operation.

TABLE 6. VR_HOT# TYPICAL TRIP POINT AND HYSTERESIS

| TMAX (°C) | VR_HOT# LOW (°C; T2, %$V_{CC}$) | VR_HOT# OPEN (°C; T1, %$V_{CC}$) | HYSTERESIS (°C) |
|---|---|---|---|
| 85 | 83.1; 48.94% | 80.3; 51.04% | 2.7 |
| 90 | 88.6; 45.52% | 85.9; 47.56% | 2.7 |
| 95 | 94.3; 42.26% | 91.4; 44.20% | 2.9 |
| 100 | 100.0; 39.12% | 97.1; 40.98% | 2.9 |
| 105 | 106.1; 36.14% | 103.0; 37.92% | 3.1 |
| 110 | 109.1; 33.32% | 106.1; 35.00% | 3.0 |
| 115 | 115.5; 30.68% | 112.3; 32.24% | 3.2 |
| 120 | 118.7; 28.24% | 115.5; 29.7% | 3.2 |

In addition, as the temperature increase, the voltage on the TM pin drops. The controller is disabled when the TM pin voltage drops below 0.95 (typically) and becomes active again when it is above 1.05V (typically).

## Temperature Compensation

The ISL6398 supports inductor DCR sensing, or resistive sensing techniques. The inductor DCR has a positive temperature coefficient, which is about +0.385%/°C. Since the voltage across the inductor is sensed for the output current information, the sensed current has the same positive temperature coefficient as the inductor DCR. n order to obtain the correct current information, there should be a way to correct the temperature impact on the current sense component.

## Integrated Temperature Compensation

The ISL6398 utilizes the voltage at the TM pin and “TCOMP” register to compensate the temperature impact on the sensed current. The block diagram of this function is shown in Figure 23.

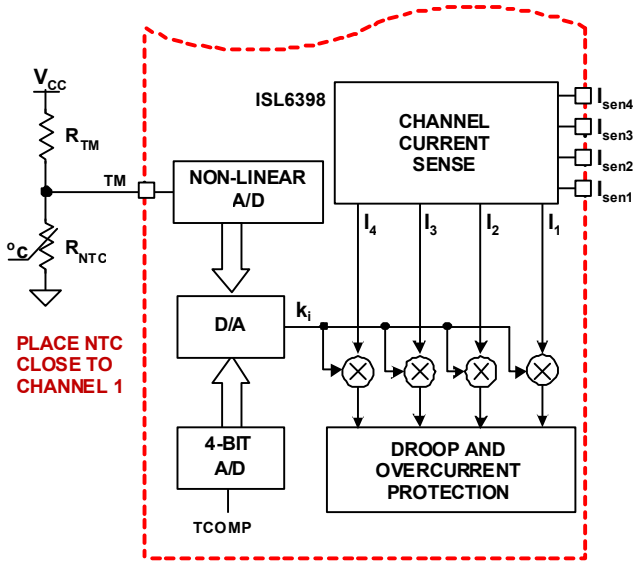


FIGURE 23. BLOCK DIAGRAM OF INTEGRATED TEMPERATURE COMPENSATION

When the NTC is placed close to the current sense component (inductor), the temperature of the NTC will track the temperature of the current sense component. Therefore, the TM voltage can be utilized to obtain the temperature of the current sense component. Since the NTC could pick up noise from phase node, a 0.1µF ceramic decoupling capacitor is recommended on the TM pin in close proximity to the controller.

Based on the $V_{CC}$ voltage, the ISL6398 converts the TM pin voltage to a 6-bit TM digital signal for temperature compensation. With the non-linear A/D converter of ISL6398, the TM digital signal is linearly proportional to the NTC temperature. For accurate temperature compensation, the ratio of the TM voltage to the NTC temperature of the practical design should be similar to that in Figure 21.

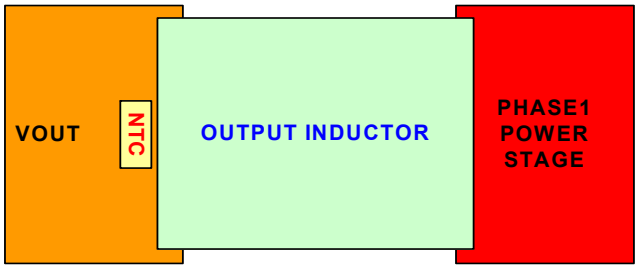


FIGURE 24. RECOMMENDED PLACEMENT OF NTC

Since the NTC attaches to the PCB, but not directly to the current sensing component, it inherits high thermal impedance between the NTC and the current sensing element. The “TCOMP” register values can be utilized to correct the temperature difference between NTC and the current sense component. Figure 24 shows that, the NTC should be placed in proximity to the channel 1 and the output rail; DON’T place it close to the MOSFET side, which generates much more heat.

The ISL6398 multiplexes the “TCOMP” value with the TM digital signal to obtain the adjustment gain to compensate the temperature impact on the sensed channel current. The compensated channel current signal is used for droop and overcurrent protection functions.

TABLE 7. “TCOMP” VALUES

| E9h | TCOMP (°C) | E9h | TCOMP (°C) |
|---|---|---|---|
| 0h | OFF | 8h | 16 |
| 1h | -2.5 | 9h | 18.9 |
| 2h | 0 | Ah | 21.6 |
| 3h | 2.5 | Bh | 24.3 |
| 4h | 5 | Ch | 27 |
| 5h | 7 | Dh | 29.7 |
| 6h | 10 | Eh | 32.4 |
| 7h | 13 | Fh | 35.1 |

When a different NTC type or different voltage divider is used for the TM function, the TCOMP voltage can also be used to compensate for the difference between the recommended TM voltage curve in Figure 21 and that of the actual design. If the same type NTC ($\beta$ = 3477) but different value is used, the pull-up resistor needs to be scaled, as shown in Equation 20:

$$R_{TM} = \frac{1k\Omega \cdot R_{NTC_NEW}}{6.8k\Omega} \quad \text{(EQ. 20)}$$

## Design Procedure

1. Properly choose the voltage divider for the TM pin to match the TM voltage vs temperature curve with the recommended curve in Figure 21.
2. Run the actual board under the full load and the desired cooling condition.
3. After the board reaches the thermal steady state, record the temperature ($T_{CSC}$) of the current sense component (inductor or MOSFET) and the voltage at TM and $V_{CC}$ pins.
4. Use Equation 21 to calculate the resistance of the NTC, and find out the corresponding NTC temperature $T_{NTC}$ from the NTC datasheet or using Equation 22, where b is equal to 3477 for recommended NTC.

$$R_{NTC}(T_{NTC}) = \frac{V_{TM} \times R_{TM}}{V_{CC} - V_{TM}} \quad \text{(EQ. 21)}$$

$$T_{NTC} = \frac{\beta}{\ln\left(\frac{RTM}{R_{NTC}(T_{NTC})}\right) + \frac{\beta}{298.15}} - 273.15 \quad \text{(EQ. 22)}$$

5. In Intersil design worksheet, choose a number close to the result as in Equation 23 in the “TCOMP” cell to calculate the needed resistor network for the register “TCOMP” pin. Note: for worksheet, please contact Intersil Application support at www.intersil.com/design.

$$T_{COMP} = T_{CSC} - T_{NTC} \quad \text{(EQ. 23)}$$

6. Run the actual board under full load again with the proper resistors connected to the “TCOMP” pin.
7. Record the output voltage as V1 immediately after the output voltage is stable with the full load. Record the output voltage as V2 after the VR reaches the thermal steady state.
8. If the output voltage increases over 3mV as the temperature increases, i.e. V2 - V1 > 3mV, reduce “TCOMP” value; if the output voltage decreases over 3mV as the temperature increases, i.e. V1 - V2 > 3mV, increase “TCOMP” values.

## Dynamic VID Compensation (DVC)

During DVID transitions, extra current builds up in the output capacitors due to the C*dv/dt. The current is sensed by the controller and fed across the feedback resistor creating extra droop (if enabled) and causing the output voltage not properly tracking the DAC voltage. An independent compensation for DVID up and DVID down are implemented to optimize the DVID transition (Patent Pending), programmable by D7 and D9, respectively.

## Programmable Compensation

The ISL6398 controller utilizes Intersil’s proprietary Advanced Linear EAPP Digital control scheme that is the best modulation scheme in the industry to achieve linear response for both transient and current balance and can process voltage and current information in real time for fast control and high speed protection and realize digital power management capability and flexibility and. The digital compensation covers a wide range of poles and zeros, as in Figure 25, suitable for computing, networking, ASIC, and many general purpose applications. Refer ISL6398 GUI on Table 16 for more details and advanced features.

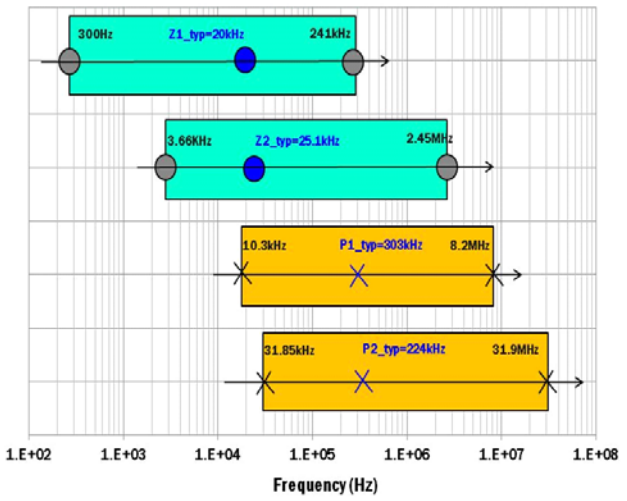


FIGURE 25. TYPE III Compensation Poles and Zero Range

## Catastrophic Fault Protection

A catastrophic failure is a failure that will result in an exothermic event if the power source is not removed. A predominate catastrophic failure is a high-side FET shorting, which can cause either output overvoltage or input overcurrent event. When the ISL6398 detects either event, an internal switch is turned on to pull the EN_PWR_CFP pin to $V_{CC}$, as an indication of a component failure in the regulator’s power train. As shown in Figure 26, a CFP fault signal can be generated by using a resistor divider on this pin. To be able to apply the signal to the PS_ON# switch of an ATX power supply or a simply external switch (2N7002), the CFP fault signal should be lower than 0.8V at maximum input voltage, $V_{IN(max)}$ and higher than 3V at lowest normal operational $V_{CC}$ (4.5V) when the input voltage (VIN) is removed. Given such conditions, the equivalent (in parallel) impedance of the upper leg ($R_{UP}$) and lower leg ($R_{DW} = R_{DW1} + R_{DW1}$) should be higher than 1kΩ. For instance, if we select the total lower leg impedance ($R_{DW}$) as 9.39kΩ, then the $R_{UP}$ is calculated as in Equation 25, 100kΩ for a maximum POR of 10.72V, The lower leg impedance is then calculated by 2.74kΩ and 6.65kΩ, as in Equations 26 and 27, respectively.

$$R_{DW} = R_{DW1} + R_{DW2} \quad \text{(EQ. 24)}$$

$$R_{UP} = \frac{VIN(POR, max) - 0.92V}{0.92V} \cdot R_{DW} \quad \text{(EQ. 25)}$$

$$R_{DW1} = \frac{VIN(max)}{0.8V} \cdot (R_{UP} + R_{DW}) \quad \text{(EQ. 26)}$$

$$R_{DW2} = R_{DW} - R_{DW1} \quad \text{(EQ. 27)}$$

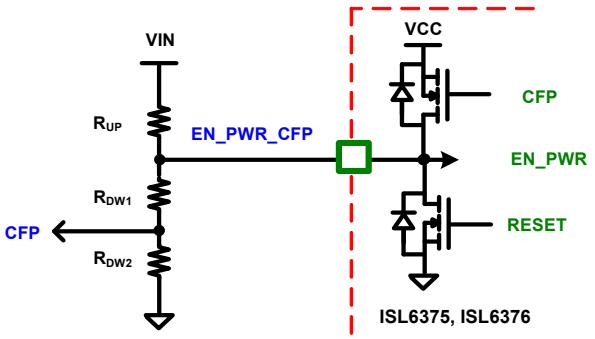


FIGURE 26. BI-DIRECTIONAL EN_PWR_CFP

Prior to an exothermic event, the fault signal (CFP) should be used on the platform to remove the power source either by firing a shunting SCR to blow a fuse or by turning off the AC power supply.

# Input Current Sensing

The input current sensing uses Intersil patented technique to overcome the high common-mode input requirement challenge. An R-C network with thermal compensation across the inductor (LIN) extracts the DCR voltage, as shown in Figure 27, while the C might need to be split into 2, one close the LIN and one close to the controller. The input inductor can be used for current sensing and has benefit of isolating noise from the rest of the board. However, when there are insufficient bulk capacitors on the power-stage side, a resonant tank can be formed by input

ceramic capacitors and the inductor, yielding oscillation or audio noise during audio frequency range of heavy load transient. In addition, since $Z_{NTC}$ network steals portion of sensed current from $R_{IN1}$, input current reading will have offset.

In many cases, a narrow input-rail PCB trace (but wide enough to carry DC current) is sufficient to serve as the isolation path. Thus, the input current sensing can simply be realized with a dedicated power resistor, as shown in Figure 28.

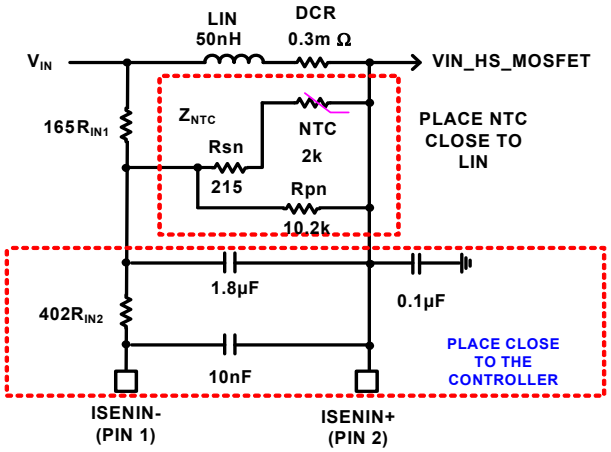


FIGURE 27. INPUT DCR-SENSING CONFIGURATION

The full scale of input current sensing is 10µA, read 1Fh with READ_IIN(89h), via PMBus, while the input over-current trip point is at 15µA (Programmable via F6[6:5]). A greater than 40µs time constant [C*$R_{IN1}$*$R_{IN2}$)/($R_{IN1}$+$R_{IN2}$)] might be needed if the average input current reporting is preferred; and it also reduces chance to trigger CFP during heavy load transient depending upon the input filter. A design worksheet to select these components is available for use. Please contact Intersil Application support at www.intersil.com/design.

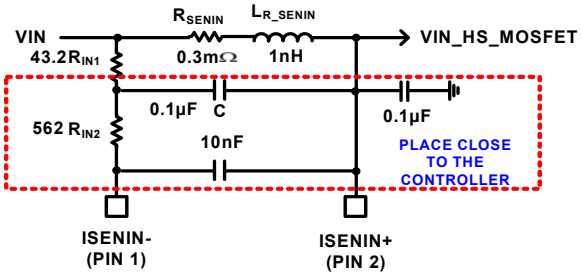


FIGURE 28. INPUT R-SENSING CONFIGURATION

When not used, connect ISENIN+ to VIN and a resistor divider with a ratio of 1/3 on ISENIN± pin, say 499k Ohm in between ISENIN± pins and then 1.5MΩ from ISENIN- to ground (see Figure 29).

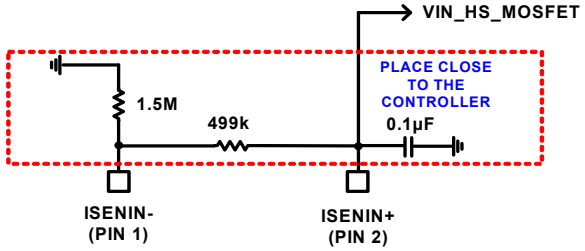


FIGURE 29. DISABLE PIN AND IIN CONFIGURATION

# Auto-phase Shedding

The ISL6398 incorporates auto-phase shedding feature to improve light to medium load range. The phase current dropping threshold is programmable with the resistor on auto pin. The efficiency-optimized current trip point (I1) from 1-Phase to 2-Phase operation is approximated with Equation 28, which is kx larger than the efficiency-optimized current trip step (dI = I3 - I2) in between from 2-phase to 3-phase (I2) and from 3-phase to 4-phase (I3). The optimized-efficiency current trip point difference between phases remain constant I1/k, as expressed in Equation 29 and Figure 30

$$I1 \approx \sqrt{\frac{2 \cdot (P_{QG} + P_{CORE} + P_{COSS})}{ESR_{IN} \cdot D + R_{ON} + L_{DS} \cdot F_{SW}}} \quad \text{(EQ. 28)}$$

$$R_{ON} = D \cdot r_{DS(ON)_UP} + (1 - D) \cdot r_{DS(ON)_LOW} + DCR$$

where $P_{QG}$ is the per-phase gate charge loss, $P_{CORE}$ is the inductor core loss, $P_{QOSS}$ is the sum of high-side and low-side MOSFETs' output charge loss.

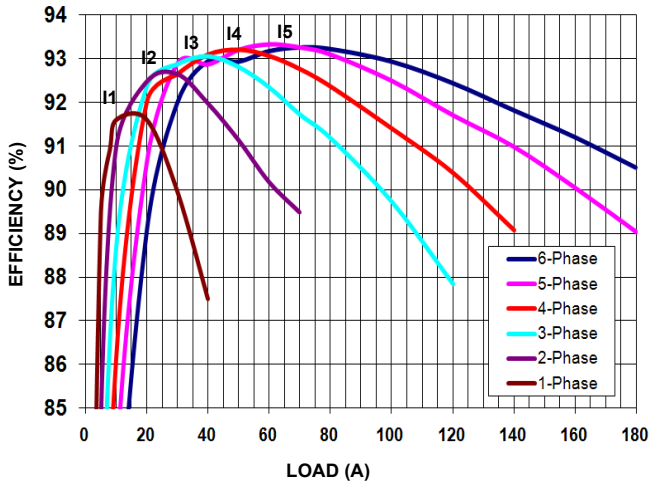


FIGURE 30. EFFICIENCY VS. PHASE NUMBER

$$I_{IMON_OPTIMIZED_1_PHASE} \approx \frac{64 \cdot DCR \cdot I1}{N_{MAX} \cdot R_{SET}} \quad \text{(EQ. 29)}$$

$$R_{AUTO} = \frac{1.2V}{I_{IMON_OPTIMIZED_1_PHASE}} \quad \text{(EQ. 30)}$$

$$R_{AUTO} \approx \frac{1.2V \cdot N_{MAX} \cdot R_{SET}}{64 \cdot DCR \cdot I1} \quad \text{(EQ. 31)}$$

$$I_{(N)} \approx I1 \cdot \left(1 + \frac{1}{K} \cdot (N-1)\right) \quad \text{(EQ. 32)}$$

Equations 30 and 31 helps approximate the AUTO resistor, while the trip point hysteresis can be programmed via PMBus D1[5:4]. Typically, the higher the inductor ripple current, the higher percentage of hysteresis and k it requires. Following is an easy way to estimate $R_{AUTO}$ value:

1. Before AUTO trip point tuning, calibrate IMON current close to zero with PMBus E4[4:0].
2. Disable AUTO mode via D4[2] or by tying AUTO pin GND
3. Obtain efficiency curve for 1- to 6-phase, programmed via D0,with appropriate load (~25A/Phase. 0.5A step); and APA disabled via D4h as needed.
4. Determine I1 from the above test result.
5. Short AUTO pin to ground with a current meter to measure the IMON current ($I_{IMON_OPTIMIZED_1_PHASE}$) when VR is at I1 load.
6. Calculate $R_{AUTO}$ as in Equation 31.
7. Solder down $R_{AUTO}$ and enable AUTO mode.
8. Take efficiency curve and compare it with the 1-to 6-Phase Efficiency Curves.
9. Tweak $R_{AUTO}$ and D1 (k, I1, Hysteresis) as needed for optimal Efficiency performance at targeted operating input and output voltage as well as airflow.
10. Obtain efficiency curve for couple boards and tweak $R_{AUTO}$ to re-center overall efficiency of these boards.

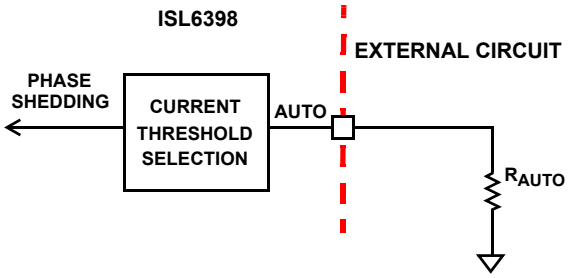


FIGURE 31. SIMPLIFIED AUTO-PHASE SHEDDING CIRCUIT

In addition, the SMBus, PMBus, or $I^2C$ gives flexibility to program Auto K-factor (D1[3:2]), hysteresis (D1[5:4]), I1 (D1[7:6]), and number of operating phases after soft-start and when auto mode is disabled by D4[2]. However, all phases will be added back when APA is triggered; and if APA is disabled, all phase are added back only after reset or OCP retry.

The minimum of auto-phase shedding is defaulted by NPSI in PSI1 mode and can also be programmed by the bus command code D1h[1:0], as in Table 14. The phase dropping sequence is summarized in Table 8.

TABLE 8. PHASE DROPPING SEQUENCE

| N | PWM# TIED TO $V_{CC}$ (VCORE) | PHASE SEQUENCE |
|---|---|---|
| 6 | NONE | 6-3-5-2-4-1 |
| 5 | PWM6 | 5-4–2-3-1 |
| 4 | PWM5 | 4-2-3-1 |
| 3 | PWM4 | 3-2-1 |
| 2 | PWM3 | 2-1 |

To ensure dropped phases have sufficient energy to turn on high-side MOSET and sustain instant load apply after VR0 staying in light load condition for a long time (hours to days), a boot-refresh circuit turns on Low-side MOSFET of each dropped phase to refresh the boot capacitor at a rate of slightly above 20kHz. The boot-fresh circuit is automatically turned off to boot efficiency when DAC drops to 0.60V.

# Resistor Reader (Patented)

Intersil has developed a high resolution ADC using a patented technique with simple 1%, 100ppm/k or better temperature coefficient resistor divider. The same type of resistors are preferred so that it has similar change over-temperature. In addition, the divider is compared to the internal divider off $V_{CC}$ and GND nodes and therefore must refer to VCC and GND pins, not through any RC decoupling network.

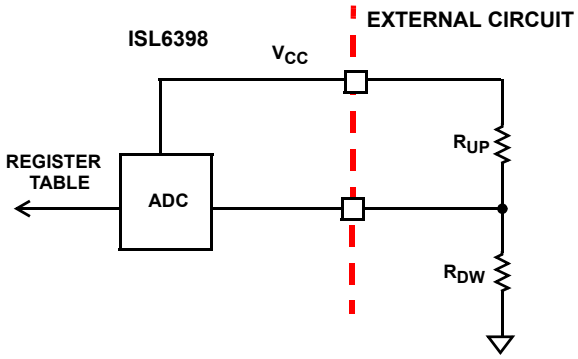


FIGURE 32. SIMPLIFIED RESISTOR DIVIDER ADC

NVM_BANK_BT pin is designed to allow the user to select different NVM Banks (Pre-configured IC) and/or Boot Voltage Level even without PMBus communications; while VRSEL_ADDR is to select different operation mode (5mV or 10mV), indirectly control Boot Voltage Level and DAC resolution, and PMBus Addresses. The programmed values of resistor reader are stored in DC and DD of PMBus.

As an example, Table 9 shows the $R_{UP}$ and $R_{DW}$ values of each pin for a specific system design; DATA for corresponding registers can be read out via PMBus commands (DC and DD). In addition, some tie-high and tie-low options are available for easy programming (save resistor dividers) and can also be used to validate the VR operation during In-Circuit Test (ICT). For instance, when the system boot voltage is required at 0V, the NVM_BANK_BT pin can be set to different voltage level, prior to power-up, to get a known boot voltage to check VR operation with ICT. Resistor reader calculator is available, please contact Intersil Application support at www.intersil.com/design.

TABLE 9. PMBus (DC) RESISTOR READER EXAMPLE

| PMBus (DC) | $R_{UP}$ (kΩ) | $R_{DW}$ (kΩ) | PMBus 8-Bit ADDRESS | RECOMMENDED APPLICATIONS |
|---|---|---|---|---|
| 00h | OPEN | 10 | 80 | 10mV/Step |
| 01h | 49.9 | 12.4 | 82 | 10mV/Step |
| 02h | 45.3 | 12.7 | 84 | 10mV/Step |
| 03h | 43.2 | 13.3 | 86 | 10mV/Step |
| 08h | 29.4 | 15 | C0 | 10mV/Step |
| 09h | 28 | 15.4 | C2 | 10mV/Step |
| 0Ch | 24.3 | 17.4 | C8 | 10mV/Step |
| 0Dh | 23.2 | 17.8 | CA | 10mV/Step |
| 10h | 20 | 19.6 | E0 | 10mV/Step |
| 11h | 19.6 | 20.5 | E2 | 10mV/Step |
| 14h | 17.4 | 23.2 | E8 | 10mV/Step |
| 15h | 16.9 | 24.3 | EA | 10mV/Step |
| 80h | OPEN | 499 | 80 | 5mV/Step |
| 81h | 374 | 93.1 | 82 | 5mV/Step |
| 82h | 340 | 95.3 | 84 | 5mV/Step |
| 83h | 316 | 100 | 86 | 5mV/Step |
| 88h | 221 | 113 | C0 | 5mV/Step |
| 89h | 210 | 115 | C2 | 5mV/Step |
| 8Ch | 182 | 130 | C8 | 5mV/Step |
| 8Dh | 174 | 133 | CA | 5mV/Step |
| 90h | 150 | 147 | E0 | 5mV/Step |
| 91h | 147 | 154 | E2 | 5mV/Step |
| 94h | 130 | 174 | E8 | 5mV/Step |
| 95h | 127 | 182 | EA | 5mV/Step |

TABLE 10. PMBus (DD) RESISTOR READER EXAMPLE

| PMBus (DD) | $R_{UP}$ (kΩ) | $R_{DW}$ (kΩ) | NVM | BT |
|---|---|---|---|---|
| 00h | OPEN | 10 | NVM0 | NVM_BT |
| 20h | 118 | 26.1 | NVM1 | NVM_BT |
| 40h | 196 | 43.2 | NVM2 | NVM_BT |
| 60h | 294 | 64.9 | NVM3 | NVM_BT |
| 80h | 422 | 93.1 | NVM4 | NVM_BT |
| A0h | 590 | 130 | NVM5 | NVM_BT |
| C0h | 825 | 182 | NVM6 | NVM_BT |
| E0h | OPEN | 499 | NVM7 | NVM_BT |
| 01h | 49.9 | 12.4 | NVM0 | 0.0V |
| 10h | 20 | 19.6 | NVM0 | 1.7V, 10mV/Step |
| 09h | 28 | 15.4 | NVM0 | 0.6V, 5mV/Step<br>1.2V, 10mV/Step |

TABLE 10. PMBus (DD) RESISTOR READER EXAMPLE (Continued)

| PMBus (DD) | $R_{UP}$ (kΩ) | $R_{DW}$ (kΩ) | NVM | BT |
|---|---|---|---|---|
| 32h | 40.2 | 45.3 | NVM1 | 0.9V, 5mV/Step<br>1.8V, 10mV/Step |
| 55h | 59 | 84.5 | NVM2 | 1.0V, 5mV/Step<br>2.0V, 10mV/Step |
| 79h | 78.7 | 163 | NVM3 | 1.2V, 5mV/Step<br>2.4V, 10mV/Step |
| 9Fh | 95.3 | 367 | NVM4 | 1.5V, 5mV/Step<br>2.0V, 10mV/Step |
| B2h | 196 | 226 | NVM5 | 1.8V, 10mV/Step |
| DAh | 215 | 475 | NVM6 | 2.5V, 10mV/Step |

NOTE: More options in resistor reader calculator. NVM_BT = Boot Voltage Loaded from the Bank, not fixed by resistor reader.

# Memory Banks

The ISL6398 has 8 memory banks to store up (STORE_USER_ALL, 15h) to 8 different configurations, selectable via PMBus (DEh) or resistor to GND on the NVM_BANK pin, as in Table 11. No decoupling capacitor is allowed on the pin. Prior to the soft-start, the selection of memory bank is stored in the data registers of PMBus (DDh). They are reset by $V_{CC}$ POR. In addition, the selected memory bank can be overridden by PMBus (DEh). Only the selected memory bank's configuration is loaded (RESTORE_USER_ALL,16h) into the operating memory to have control on the VR system prior to issuing soft-start.

TABLE 11. MEMORY BANK (PMBus, DD)

| DEh | MEMORY BANK NAME |
|---|---|
| 00h | USER_NVM0 |
| 01h | USER_NVM1 |
| 02h | USER_NVM2 |
| 03h | USER_NVM3 |
| 04h | USER_NVM4 |
| 05h | USER_NVM5 |
| 06h | USER_NVM6 |
| 07h | USER_NVM7 |

Other than device's PMBus Addresses and VR operation mode, all system design parameters are programmed by PMBus, as summarized in Table 12 and detailed in Table 14.

TABLE 12. SYSTEM PARAMETER SUMMARY

| CODE | PMBus REG | DESCRIPTION | RANGE |
|---|---|---|---|
| PM_ADDR | N/A | PMBus Address | 80-8E, C0-CE, E0-EE, F0-FE |
| VR_MODE | N/A | By “VRSEL” pin | 5mV or 10mVstep |
| BT | E6 | 5m Step Boot Voltage | 0, 0.25 to 1.52V |
| | | 10mV Step Boot Voltage | 0, 0.5, 0.51 to 3.04V |
| DVID | F6 | DVID Slew Rate | 0.315 to 13.25mV/µs |
| | D7 | DVID UP Compensation | Offset, Gain, Slope |
| | D9 | DVID Down Compensation | Offset, Gain, Slope |
| TMAX | E8 | Maximum Operating Temperature | +85°C to +120°C (5°C/Step) |
| IMAX | EA | $I_{CCMAX}$ of Platforms | 0-255A, 1A/LSB |
| NPSI | D2 | Minimum Number of Operational Phases in Auto | SI1, SI2, CI1, CI2 |
| Protection | D2 | Frequency Limiter | $2F_{SW}$, $1.5F_{SW}$, Infinity |
| | E1 | SET_UV | 105mV to 402mV |
| | D8 | SET_OV | 136mV to 549mV |
| | 24 | Maximum Output Voltage | Up to 3.11V |
| | DF | PROTECTION_DISABLE | All Faults |
| | F6 | INPUT OCP | 100% to 130% |
| | E9 | Thermal APA | 75% to 100% |
| | F4 | AVG_OCP CYCLE_LIMITING | 1.0 TO 1.6 125% to 70% |
| | F7-FC | Current Balance | -12% to +9% |
| DIGITAL IOUT (8Ch) | E4 | IMON_TRIM | -4µA to +3.75µA |
| | E5 | IOUT_CAL_OFFSET | -4h to 3h |
| LOOP | D8 | UP Ramp Amplitude | 0.75, 1.0, 1.2, 1.5V |
| | DE | NVM_BANK | Up to 8 Banks |
| | D4 | Dither Enable | Enable or Disable |
| | E9 | Mismatching Temperature Compensation between sensing element and NTC | OFF, -2.5°C to +35.1°C |
| | E2 | PS Mode Transition Compensation | PS Mode Transition |
| | E2, E3 | High Frequency Transient Compensation | E2[4:3]: 20m- 80mV E3: Phase Count Original Speedup |
| | F5 | SET_FREQ | 120k TO 2.025MHz |
| | B0-BF | COMPENSATION | $R_1$-R3 and C1-C3 |
| | F3 | SP_VdBand_K | Original, 2p-16pF 25mV - 200mV 0 to 0.75, Disable |

TABLE 12. SYSTEM PARAMETER SUMMARY (Continued)

| CODE | PMBus REG | DESCRIPTION | RANGE |
|---|---|---|---|
| Output Voltage Regulation | D6 | LOCK_VID_OFFSET | 0h to 3h |
| | DA | Set_VID | up to 3.04V |
| | DB | Set_OFFSET | up to 1.270V |
| | D3 | Droop Enable | Enable or Disable |
| | D3 | Negative Droop | 100% to 5% |
| | D3 | Positive Droop | 0mV, 4mV to 32mV |
| | E4 | IDROOP_TRIM | -4µA to +3.75µA |
| | E4 | Output Offset Trim | -4µA to +3.75µA |
| AUTO | D0 | NPHASE | 1 TO 6-PHASE |
| | D1 | AUTO_K | 1.0, 1.25, 1.5, 1.7 |
| | D1 | AUTO_HYS | 12.5, 16.6, 25, 50% |
| | D1 | AUTO_I1 | 80, 90, 100, 110% |
| | D1 | Minimum Phase | 1 TO 4-PHASE |
| | D2 | AUTO Blanking | 0.6ms to 4.6ms |
| | D2 | APA Time Constant | tsw/8 to tsw |
| | D2 | APA_Stackup_Delay | 0 to 300ns |
| | D4 | APA LEVEL | 10 to 70mV |
| | D4 | BOOT REFRESH | Enable or Disable |
| | D4 | AUTO Enable | Enable or Disable |
| USER | 99 | MFR_ID | 2 BYTES |
| | 9A | MFR_MODEL | 2 BYTES |
| | 9B | MFR_REV | 2 BYTES |
| | 9D | MFR_DATE | 3 BYTES |

# SMBus, PMBus and I²C Operation

There are 32 PMBus address, which can be programmed by a resistor divider on VRSEL_ADDR pin, as shown in Figure 32 and summarized in Table 13.

The ISL6398 features SMBus, PMBus and I²C with programmable address via VRSEL_ADDR pin, as in Table 13, while SMBus/PMBus includes an Alert# line and Packet Error Check (PEC) to ensure data properly transmitted. In addition, the output voltage, droop slope, enable, operating phase number, and overvoltage setpoint can be written and read via this bus, as summarized in Table 14. Input, output, fault, and temperature telemetries can be read as summarized in Table 15. For proper operation, users should follow the SMBus, PMBus, and I²C protocol, as shown Figure 36. Note that STOP (P) bit is NOT allowed before the repeated START condition when “reading” contents of register, as shown in Figure 36.

The supported SMBus/PMBus/I²C addresses are in 8-bit format (including write and read bit): 80-8E, E0- EE, C0-CE, F0-FE. The least significant bit of the 8-bit address is for write (0h) and read (1h). For reference purposes, the 7-bit format addresses are also summarized in Table 13. There are a series set of read and write commands as summarized in Tables 14 and 15, respectively. The SMBus/PMBus/I²C allows to program the registers as in Table 12, except for SMBus/PMBus/I²C addresses, 16ms (typically, worst case 20ms) after $V_{CC}$ above POR and prior to Enable pins (EN_PWR_CFP) high. The bus can also program default content during this period. If all Enable pins are high before the NVM configuration is loaded completely, the controller will issue soft-start 16ms (typically, worst case 20ms) after $V_{CC}$ above its POR.

88h-8Eh are two-byte word read with PEC (if applicable), while 78h, F2h, and other write command codes are one-byte word read with PEC (if applicable).

When PMBus is not used, simply leave the respective pull-up on their pins and not connect to the bus..

**TABLE 13. SMBus/PMBus/I²C 8-BIT AND 7-BIT FORMAT ADDRESS (HEX)**

| 8-BIT | 7-BIT | 8-BIT | 7-BIT | 8-BIT | 7-BIT |
|---|---|---|---|---|---|
| 80/81 | 40 | C8/C9 | 64 | F0/F1 | 78 |
| 82/83 | 41 | CA/CB | 65 | F2/F3 | 79 |
| 84/85 | 42 | CC/CD | 66 | F4/F5 | 7A |
| 86/87 | 43 | CE/CF | 67 | F6/F7 | 7B |
| 88/89 | 44 | E0/E1 | 70 | F8/F9 | 7C |
| 8A/8B | 45 | E2/E3 | 71 | FA/FB | 7D |
| 8C/8D | 46 | E4/E5 | 72 | FC/FD | 7E |
| 8E/8F | 47 | E6/E7 | 73 | FE/FF | 7F |
| C0/C1 | 60 | E8/E9 | 74 | | |
| C2/C3 | 61 | EA/EB | 75 | | |
| C4/C6 | 62 | EC/ED | 76 | | |
| CE/CF | 63 | EE/EF | 77 | | |

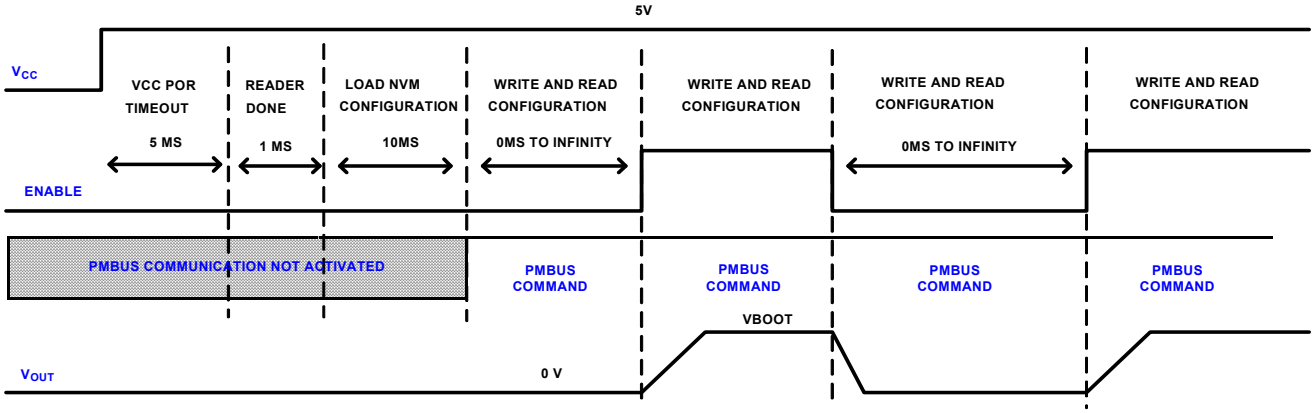


FIGURE 33. SIMPLIFIED SMBus/PMBus/I²C INITIALIZATION TIMING DIAGRAM

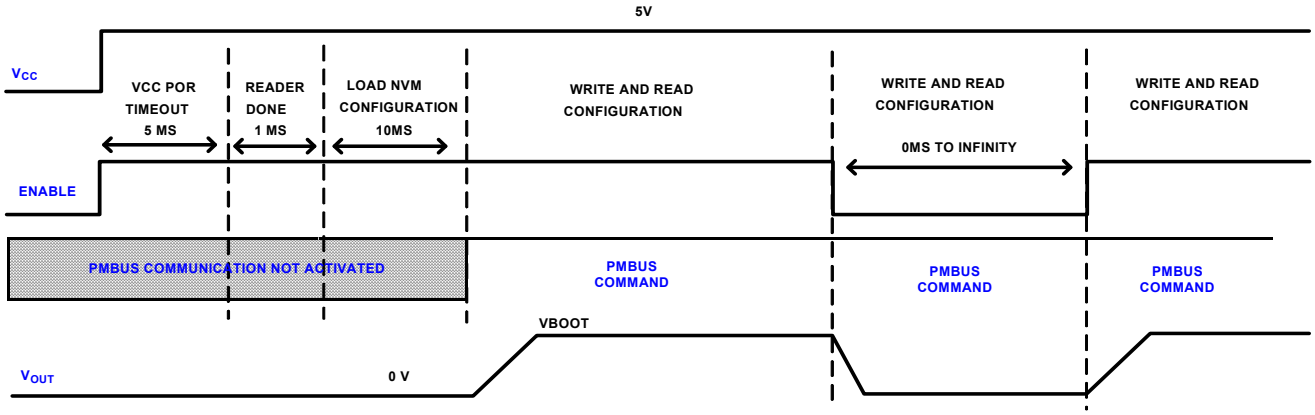


FIGURE 34. SIMPLIFIED SMBus/PMBus/I²C INITIALIZATION TIMING DIAGRAM WITH ENABLE HIGH BEFORE COMPLETING NVM LOADING

1. Send Byte Protocol

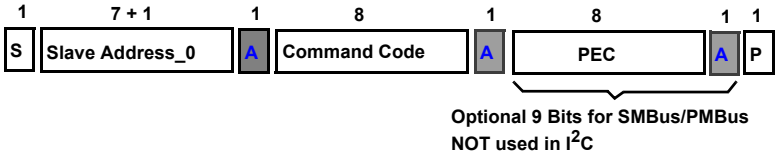


S: Start Condition
A: Acknowledge (“0”)
N: Not Acknowledge (“1”)
W: Write (“0”)
RS: Repeated Start Condition
R: Read (“1”)
PEC: Packet Error Checking
P: Stop Condition

Acknowledge or DATA from Slave, ISL6398

Example command: 03h Clear Faults
(This will clear all of the bits in Status Byte for the selected Rail)

2. Write Byte/Word Protocol

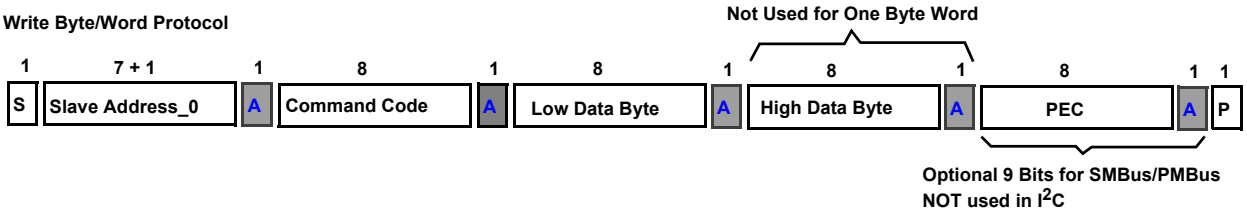


Example command: DAh SET_VID (one word, High Data Byte and ACK are not used)

3. Read Byte/Word Protocol

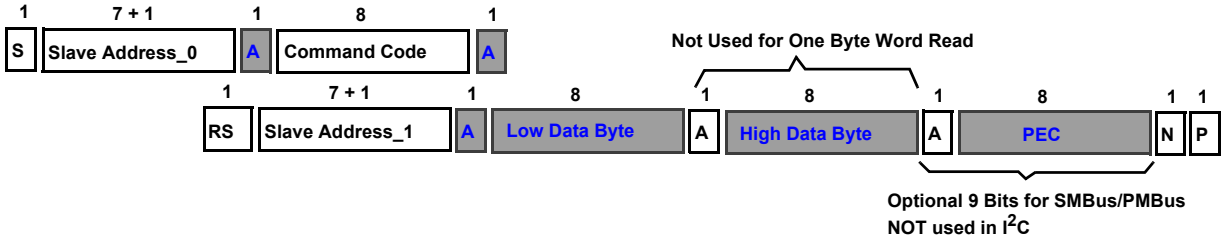


Example command: 8B READ_VOUT (Two words, read voltage of the selected rail).

NOTE: All Writable commands are read with one byte word protocol.
STOP (P) bit is NOT allowed before the repeated START condition when “reading” contents of a register.

4. Block Write Protocol

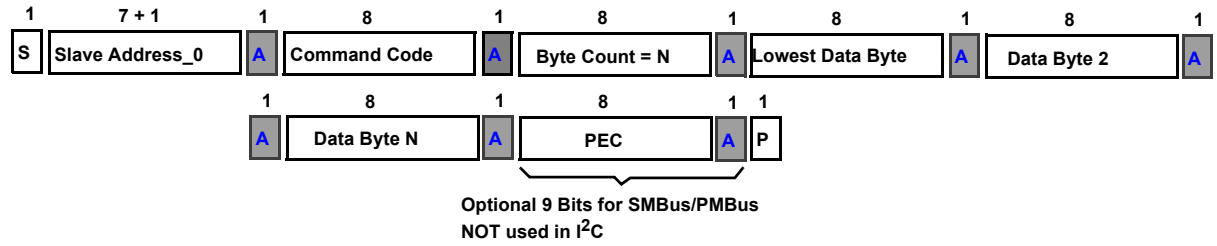


Example command: 9Dh MFR_DATA (3 Data Byte)

**FIGURE 35. SMBus/PMBus/I²C PROTOCOL**

5. Block Read Protocol

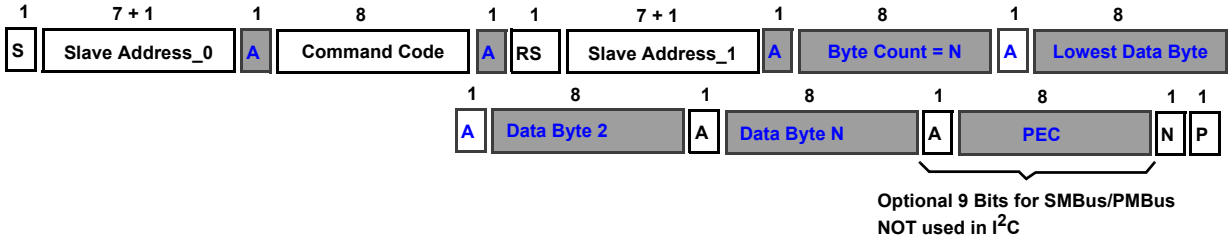


Example command: 8B READ_VOUT (Two words, read voltage of the selected rail).

NOTE: All Writable commands are read with one byte word protocol.
STOP (P) bit is NOT allowed before the repeated START condition when “reading” contents of a register.

6. Group Command Protocol - No more than one command can be sent to the same Address

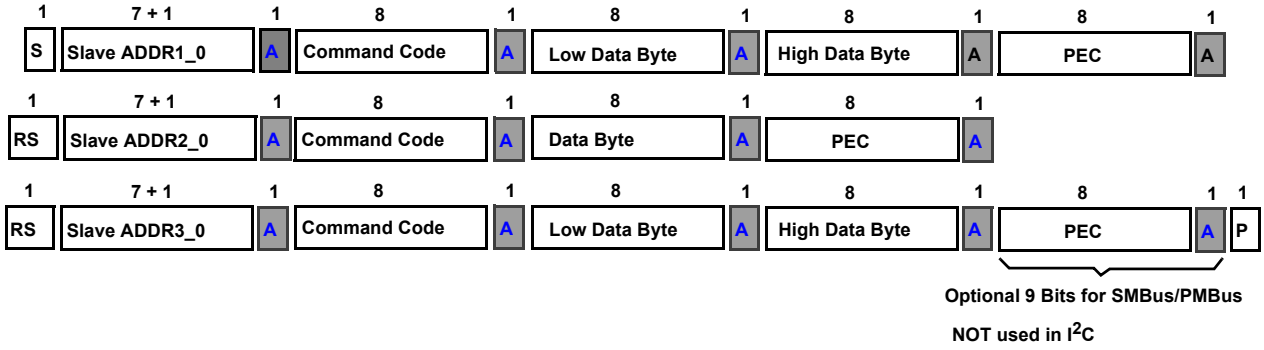


7. Alert Response Address (ARA, 0001_1001, 25h) for SMBus and PMBus, not used for $I^2C$

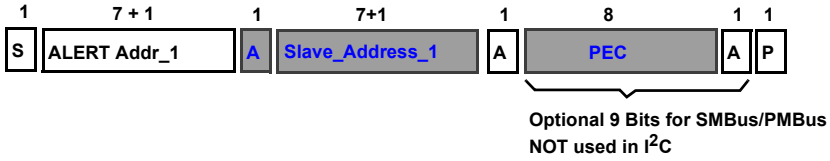


FIGURE 36. SMBus/PMBus/$I^2C$ PROTOCOL

TABLE 14. SMBus, PMBus, AND $I^2C$ WRITE AND READ REGISTERS

| COMMAND CODE | ACCESS | WRITE PROTECT LEVEL | DEFAULT | COMMAND NAME | DESCRIPTION |
|---|---|---|---|---|---|
| 01h[2:0] | R/W | 40h | EN pin | OPERATION (or ENABLE) | Bit[7]: 0 = OFF (0-F); 1 = ON (80-8Fh)<br>Bit[6:4] = 0;<br>Bit[3:0] = Don't care |
| 10h[7:5] | R/W | NOT | 80h | WRITE_PROTECT_ISL | 80h = Disable all standard writes (including send bytes) except for WRITE_PROTECT_ISL command.<br>40h = Disable all standard writes (including send bytes), all compensation registers and some Intersil defined commands, BUT not WRITE_PROTECT, OPERATION, CLEAR_FAULT, and some Intersil defined commands.<br>20h = Disable all standard writes, all compensation registers and some Intersil defined commands, BUT NOT WRITE_PROTECT, OPERATION, CLEAR_FAULT and some Intersil defined commands: LOCK_VID_OFFSET, SET_VID, SET_OFFSET.<br>10h = Disable all compensation registers and some Intersil defined commands, BUT not WRITE_PROTECT, OPERATION, CLEAR_FAULT and some Intersil defined commands (at WRITE PROTECTION LEVEL OF 20h): LOCK_VID_OFFSET, Set_VID, Set_OFFSET, Configurations (UVP, OVP, OCP, CFP, IMAX, TMAX, AUTO, NPHASE, BAL_XX, FREQ, BOOT_VOLTAGE, etc).<br>00h = Enable all write commands.<br>Reject all command code except for 80h, 40h, 20h, 10h, 0h<br>Not support PAGE and ON_OFF_CONFIG; Equivalent VOUT_COMAND is Set_VID, Set_OFFSET, LOCK_VID_OFFSET.<br>"WRITE PROTECT LEVEL" = ANYTHING SPECIFIED IN THIS LEVEL OR BELOW IS ALLOWED TO BE WRITTEN. |
| 15h | SEND | 00h | N/A | STORE_USER_ALL | Store user configuration (operating memory) into selected USER_NVM#. The device will declare busy at the assertion of this command, a new command addressed to this device should be sent 300ms afterward. |
| 16h | SEND | 00h | N/A | RESTORE_USER_ALL | Restore user configuration (USER_NVM#) into operating memory. The device will declare busy at the assertion of this command, a new command addressed to this device should be sent 6ms afterward. |
| 24h[8:0] | R/W | 00h | NVM_BANK | VOUT_MAX | Set maximum output voltage that VR can command (VOUT_MAX = VID+OFFSET > BOOT_Voltage).<br>5mV Mode: Up to 2.155 (H Byte: 01h; L Byte 7Eh, see Table 18);<br>10mV Mode: Up to 3.11V (High Byte: 01h; Low Byte 06h). |
| 99[15:0] | BLOCK R/W | 00h | | MFR_ID | User stores ID. |
| 9A[15:0] | BLOCK R/W | 00h | | MFR_MODEL | User stores model number. |
| 9B[15:0] | BLOCK R/W | 00h | | MFR_REVISION | User stores board and/or configuration revision number. |
| 9D[23:0] | BLOCK R/W | 00h | | MFR_DATE | User stores date. |
| AD[15:0] | BLOCK R | N/A | | IC_DEVICE_ID | Intersil Device ID: product ID (update byte, hardcoded) + ISL configuration revision (lower byte). |
| AE[15:0] | BLOCK R | N/A | | IC_DEVICE_REV | Intersil Device Revision: Silicon revision (upper byte, hardcoded) + ISL configuration revision (lower byte). |
| D0h[2:0] | R/W | 00h | $N_{PHASE}$ By Pin | OPERATE_PHASE_NUMBER | 0h = 7h = $N_{MAX}$; 1h=1 Phase;2h = 2 Phases; 3h = 3 Phases; 4h = 4 Phases; 5h = 5 Phases; 6h = 6 Phases. $N_{MAX}$ set by PWMx hard wired; for instance if PWM6 = $V_{CC}$, $N_{MAX}$ = 5 Phases. D0 should NOT be written until 50ms after soft-start and re-written after DVID. When AUTO (R to GND, not shorted to GND) function is enabled, D0h cannot use to program phase number but it reports the operating phase number. |

TABLE 14. SMBus, PMBus, AND $I^2C$ WRITE AND READ REGISTERS

| COMMAND CODE | ACCESS | WRITE PROTECT LEVEL | DEFAULT | COMMAND NAME | DESCRIPTION |
|---|---|---|---|---|---|
| D1h[7:0] | R/W | 00h | NVM_BANK | NMIN_AUTOK_HYS_I1 | Bit[1:0] - Minimum Number of Auto Phase Shedding<br>0h = 1-Phase;1h = 2-Phase; 2h = 3-Phase; 3h = 4-Phase; Default by $N_{PSI}$<br>Bit[3:2] - AUTO Mode K Factor:<br>0h = 1.25; 1h = 1.5; 2h = 1.75; 3h = 1.0; Default by AUTO pin<br>Bit[5:4] - AUTO Mode Hysteresis Factor<br>0h = 50%; 1h = 25%; 2h = 16.6%; 3h = 12.5%; Default by AUTO pin<br>Bit[7:6] - AUTO Mode I1 Factor:<br>0h = 100%; 1h = 80%; 2h = 90%; 3h = 110% of AUTO pin |
| D2h[9:0] | R/W | 00h | NVM_BANK | NPSI_AUTOBLK_FLIMITER_APATC | Bit[1:0] - Lower Power Phase Number:<br>0h = SI1, 1-Phase;<br>1h = SI2, 2-Phase;<br>2h = CI1, 1-Phase;<br>3h = CI2, 2-Phase;<br>Bit[3:2] - Time between subsequent phase drops:<br>0h = 4.6ms; 1h = 2.3ms; 2h = 1.2ms; 3h = 0.6ms, Default 0h<br>Bit[5:4] - Maximum PWM frequency under repetitive Load:<br>0h = 2 $F_{SW}$; 1h = 3/2 $F_{SW}$; 2h = 3h = Infinity; Default 0h<br>Bit[7:6] - APA Time Constant:<br>0h = Tsw; 1h = Tsw/2; 2h = Tsw/4; 3h = Tsw/8. Default 3h<br>Bit[9:8] - APA Stackup Delay:<br>0h = 0ns; 1h=100ns; 2h = 200ns; 3h = 300ns |
| D3h[6:0] | R/W | 10h | NVM_BANK | NEGLL_POSLL | Bit[0] - Droop Enable:<br>0h = Disabled, 1h = Enabled;<br>Bit[3:1] Droop Trim (NEGLL) of Full Scale:<br>0h = 100%, 1h = 75%, 2h =5 0%, 3h = 25%, 4h = 5%<br>Adjust $R_1$ for finer resolution<br>Bit[4]: Positive Load Line Enable:<br>0h = Disabled; 1h = Enabled<br>Bit[6:5]: Positive Load Line Range (POSLL):<br>0h = 4mV, 1h = 8mV; 2h = 16mV, 3h = 32mV at IMON Full Scale |
| D4h[6:0] | R/W | 10h | NVM_BANK | BTR_DE_AUTO_DITHER_APALVL | Bit[0] - Boot-Refresh Enable:<br>0h = Disabled; 1h = Enabled. Boot refresh circuits is automatically turned off when DAC is lower than 0.605V<br>Bit[1] - Diode Emulation Enable<br>0h = Disabled; 1h = Enabled<br>Bit[2] - AUTO Enable:<br>0h = Disabled; 1h = Enabled<br>Bit[3] - DITHER Enable:<br>0h = OFF, 1h = -15kHz, 0, 15kHz<br>Bit[6:4] - APA Level:<br>0h = Disable; 1h = 10mV; 2h = 20mV; 3h = 30mV; 4h = 40mV; 5h = 50mV; 6h = 60mV; 7h = 70mV |
| D5h[1:0] | R/W | 00h | NVM_BANK | PWMTRI-LEVEL | Bit[0] - PWM Support: 0h = Compatible with 3.3V PWM Tri-State (Mid) Level (PWM High is still $V_{CC}$, 5V); 1h = Compatible with 5.0V PWM Tri-State (Mid) Level. 5.0V PWM Driver is also compatible with “0h”, but not vice versa. |
| D6h[1:0] | R/W | 20h | 00h | LOCK_VID_OFFSET | Secondary output voltage control protection:<br>0h= VID and OFFSET NOT CONTROLLABLE<br>1h = Program Small OFFSET, not VID allowed<br>2h = Program Large OFFSET, not VID allowed<br>3h = VID and OFFSET CONTROLLABLE<br>(see Table 16 for details) |
| D7h[13:0] | BLOCK R/W | 10h | NVM_BANK | DVID_UP_OS_GAIN_SLP | BIT[5:0] - DVID_UP_OFFSET<br>00h = 0mV<br>01h = 5mV<br>02h = 10mV<br>... |

TABLE 14. SMBus, PMBus, AND $I^2C$ WRITE AND READ REGISTERS

| COMMAND CODE | ACCESS | WRITE PROTECT LEVEL | DEFAULT | COMMAND NAME | DESCRIPTION |
|---|---|---|---|---|---|
| D7h[13:0] | BLOCK R/W | 10h | NVM_BANK | DVID_UP_OS_GAIN_SLP | 3Fh = 315mV<br>BIT[8:6] - DVID_UP_GAIN<br>00 = deltavid*0<br>01h = deltavid/32<br>02h = deltavid/16<br>...<br>07h = deltavid * 7/32<br>BIT[13:9] - DVID_UP_SLOPE<br>00h = every 4 clocks(125ns per step - 40mV/µs)<br>01h = every 8 clocks(250ns per step - 20mV/µs)<br>...<br>1Fh = every 128 clocks (4µs per step - 1.25mV/µs) |
| D8h[6:0] | R/W | 10h | NVM_BANK | SET_OV_VRAMP | Bit[2:0] - OVP above VID during normal operation:<br>0h = 135mV, 1h = 177mV, 2h = 218V, 3h = 260mV, 4h = 342mV, 5h = 425mV, 6h = 460mV, 7h = 549mV; OVP = VID+Bit[2:0] with hysteresis of 83mV. OVP_WARNING = VID+Bit[2:0]-80mV with hysteresis of 42mV (see Electrical Specification on Page 10 for more details). OVP and OVP Warning can be disabled via DFh.<br>Bit [4:3], soft-start OVP (with 110mV Hysteresis):<br>0h = 1.58V, 1h = 1.86V; 2h = 2.29V; 3h = 3.32V<br>Bit[6:5] - VRAMP<br>0h = 0.75V; 1h = 1.0V; 2h = 1.2V; 3h = 1.5V |
| D9h[13:0] | BLOCK R/W | 10h | NVM_BANK | DVID_DW_OS_GAIN_SLP | BIT[5:0] - DVID_DW_OFFSET<br>00h = 0mV<br>01h = 5mV<br>02h = 10mV<br>...<br>3Fh = 315mV<br>BIT[8:6] - DVID_DW_GAIN<br>00 = deltavid*0<br>01h = deltavid/32<br>02h = deltavid/16<br>...<br>07h = deltavid * 7/32<br>BIT[13:9] - DVID_DW_SLOPE<br>00h = every 4 clocks(125ns per step - 40mV/µs)<br>01h = every 8 clocks(250ns per step - 20mV/µs)<br>...<br>1Fh = every 128 clocks(4us per step - 1.25mV/µs) |
| DAh[7:0] | R/W | 20h | 00h | SET_VID | PMBus VID Code (See Table 4) |
| DBh[7:0] | R/W | 20h | NVM_BANK | SET_OFFSET | PMBus OFFSET Code (See Table 4) |
| DCh[4:0] | R | N/A | PIN | Config Registers | Reference to Resistor Reader. DC |
| DDh[7:0] | R | N/A | PIN | Config Registers | Reference to Resistor Reader. DD |
| DEh[2:0] | R/W | 20h | PIN | NVM_BANK | Bit[2:0]:<br>0h = USER_NVM#0<br>1h = USER_NVM#1<br>2h = USER_NVM#2<br>3h = USER_NVM#3<br>4h = USER_NVM#4<br>5h = USER_NVM#5<br>6h = USER_NVM#6 (Copy of NVM#0, otherwise, overwritten)<br>7h = USER_NVM#7 (Copy of NVM#1, otherwise, overwritten)<br>Select which memory bank to store or load the configurations |

TABLE 14. SMBus, PMBus, AND $I^2C$ WRITE AND READ REGISTERS

| COMMAND CODE | ACCESS | WRITE PROTECT LEVEL | DEFAULT | COMMAND NAME | DESCRIPTION |
|---|---|---|---|---|---|
| DFh[8:0] | R/W | 10h | NVM_BANK | PROTECTION_DISABLE | [UV_WARN, OV_WARN,OTP, UVP, IPH_LIMIT, OCP_V, OCP_I, IIN_OCP, OVP]; OCP_V = IMON_3V Trip; OCP_I = 100uA trip; IIN_OCP = input OCP; OVP = Output overvoltage trip; IPH_LIMIT = Phase Current Limiting; UVP = Undervoltage Protection; OTP = TMAX Trip; OV_WARN = Overvoltage Warning; UV_WARN = Undervoltage warning. |
| E1h[6:0] | R/W | 10h | NVM_BANK | SET_UVP_DLY_ACTION | Bit[3:0] - Output Under-voltage Protection Level:<br>0h = 105mV, 1h = 141mV; 2h = 178mV; 3h = 214mV;<br>4h = 252mV; 5h = 291mV; 6h = 328V; 7h = 402mV;<br>UVP = DAC - UVP Level with 19mV hysteresis;<br>UVP_WARNING = DAC-UVP+66mV (or higher) with 17mV Hysteresis (see Electrical Specification on Page 10 for more details). UVP and UVP Warning can be disabled via DFh.<br>Bit[5:4]: Output Under-voltage Protection delay:<br>0h = 10µs, 1h = 20µs, 2h= 40µs, 3h = 120µs<br>Bit[6] - UVP_Actions:<br>0h= Monitor Only; 1h = Hiccup (same as OCP timing) |
| E2[11:0] | R/W | 10h | NVM_BANK | ADVANCED_PSCOMP_CONFIG | Bit[2:0] PS2 to PS1/0 DCM OFFSET, but make PS0/1 to 2 transition worse, which can help with Bit[8:6]. C2_pop1 momentarily offsets it back up so no dip if C2_pop1 > = bit[2:0] (NOT USED).<br>0h = 0mV, 1h = 20mV.....7h = 140mV.<br>Bit[4:3]: High-Frequency Transient VCOMP Bottom Clamp; the lower the better.<br>0h = 20mV, 1h = 40mV, 2h = 60mV, 3h = 80mV<br>Bit[5] - DECAY_COMP_OFFSET, higher is better (NOT USED))<br>0h = 100mV, 1h = 200mV<br>Bit[8:6] - PS0/1 to PS2 Offset (C2_pop1), This likely will take the same value as Bit[2:0] or higher. This improve PS0/1 to PS2 transition, no affect on PS2 to PS1/0.<br>0h = 0mV, 1h = 20mV.....7h = 140mV<br>Bit[10:9] PS1 to PS0 Offset (C2_pop2), no affect on other transitions.<br>0h = 0, 1h = 20mv, 2h = 40mV, 3h = 60mV<br>NOTE:<br>PS2: Diode Emulation (DE) Operation (Not used)<br>PS1: 1-Phase or 2-Phase Operation in Auto Based Upon NPSI<br>PS0: > NSPI Operation Phase |

TABLE 14. SMBus, PMBus, AND $I^2C$ WRITE AND READ REGISTERS

| COMMAND CODE | ACCESS | WRITE PROTECT LEVEL | DEFAULT | COMMAND NAME | DESCRIPTION |
|---|---|---|---|---|---|
| E3[13:0] | R/W | 10h | NVM_BANK | ADVANCED_MOD_CONFIG | Use these registers to Optimize High Frequency Transient Response at Different Phase Count with Original Speed up (F3[2:0] = 0h = Original)<br>Bit[0]: 1 PHASE dBAND:<br>0h = normal dBand; 1h = reduced dBand (faster);<br>Bit[2:1]: 1 PHASE SPEEDUP<br>0h = 3h = 1/2 decay; 1h = normal decay; 2h = 1/4 decay (faster);<br>Bit[3]: 2 PHASE dBAND;<br>0h = normal dBand; 1h = reduced dBand (faster);<br>Bit[5:4]: 2 PHASE SPEEDUP<br>0h = 3h = 1/2 decay; 1h = normal decay; 2h = 1/4 decay (faster);<br>Bit[6]: 3+ PHASE dBAND:<br>0h = normal dBand; 1h = reduced dBand (faster);<br>Bit[8:7]: 3+ PHASE SPEEDUP<br>0h =3h = 1/2 decay; 1h = normal decay; 2h = 1/4 decay (faster);<br>Bit[10:9]: Peak-Detect CAP<br>0h = 1pF, 1h = 2pF, 2h = 3pF; 3h = 4pF (smaller cap is less sensitive)<br>Bit[12:11]: High-pass CAP<br>0h = 1pF, 1h = 2pF, 2h = 3pF; 3h = 4pF (bigger cap, more sensitive)<br>Bit[13]: High-Frequency Balance Gain<br>0h = 1x; 1h= 2x gain |
| E4[9:0] | R/W | 20h | NVM_BANK | IMON_IDROOP_TRIM | Bit[4:0] - No Load IMON Trim (-4.0 µA to 3.75µA), add current through $R_1$ at droop enabled and out of IMON pin together<br>0h = 0µA.....10h = -0.25µA |
| E4[9:0] | R/W | 20h | NVM_BANK | IMON_IDROOP_TRIM | 1h = 0.25µA.....11h = -0.50µA<br>2h = 0.50µA.....12h = -0.75µA<br>3h = 0.75µA.....13h = -1.00µA<br>4h = 1.00µA.....14h = -1.25µA<br>5h = 1.25µA.....15h = -1.50µA<br>6h = 1.50µA.....16h = -1.75µA<br>7h = 1.75µA.....17h = -2.00µA<br>8h = 2.00µA.....18h = -2.25µA<br>9h = 2.25µA.....19h = -2.50µA<br>Ah = 2.50µA.....1Ah = -2.75µA<br>Bh = 2.75µA.....1Bh = -3.00µA<br>Ch = 3.00µA.....1Ch = -3.25µA<br>Dh = 3.25µA.....1Dh = -3.50µA<br>Eh = 3.50µA.....1Eh = -3.75µA<br>Fh = 3.75µA.....1Fh = -4.00µA<br>Bit[9:5] - No Load IDROOP Trim (-4.0 µA to 3.75µA), add current through $R_1$ regardless droop enabled or disabled; use it to fine tune DC offset<br>0h = 0µA .....10h = -0.25µA<br>1h = 0.25µA.....11h = -0.50µA<br>2h = 0.50µA.....12h = -0.75µA<br>3h = 0.75µA.....13h = -1.00µA<br>4h = 1.00µA.....14h = -1.25µA<br>5h = 1.25µA.....15h = -1.50µA<br>6h = 1.50µA.....16h = -1.75µA<br>7h = 1.75µA.....17h = -2.00µA<br>8h = 2.00µA.....18h = -2.25µA<br>9h = 2.25µA.....19h = -2.50µA<br>Ah = 2.50µA.....1Ah = -2.75µA<br>Bh = 2.75µA.....1Bh = -3.00µA<br>Ch = 3.00µA.....1Ch = -3.25µA<br>Dh = 3.25µA.....1Dh = -3.50µA<br>Eh = 3.50µA.....1Eh = -3.75µA<br>Fh = 3.75µA.....1Fh = -4.00µA |

TABLE 14. SMBus, PMBus, AND I²C WRITE AND READ REGISTERS

| COMMAND CODE | ACCESS | WRITE PROTECT LEVEL | DEFAULT | COMMAND NAME | DESCRIPTION |
|---|---|---|---|---|---|
| E5[8:0] | R/W | 20h | NVM_BANK | IOUT_CAL_OFFSET | OFFSETfor PMBus READ_IOUT (8Ch):<br>Bit[2:0] 1-Phase: 0h = 0h; 1h = 1h; 2h = 2h; 3h = 3h; 4h = -4h; 5h = -3h; 6h = -2h; 7h = -1h;<br>Bit[5:3] 2-Phase = 0h = 0h; 1h = 1h; 2h = 2h; 3h = 3h; 4h = -4h; 5h = -3h; 6h = -2h; 7h = -1h;<br>Bit[8:6] 3-6Phase = 0h = 0h; 1h = 1h; 2h = 2h; 3h = 3h; 4h = -4h; 5h = -3h; 6h = -2h; 7h = -1h; |
| E6[7:0] | R/W | 10h | NVM_BANK | BOOT_Voltage | 10mV: 0, 0.5V, 0.51 to 3.04V;<br>5mV: 0, 0.25, 0.255 To1.52V (see Table 4).<br>The data in this register does not represent the boot voltage programmed by “BT” pin, which can be read via SET_VID. |
| E7[7:0] | R/W | 10h | NVM_BANK | | Reserved_RSET |
| E8[6:0] | R/W | 10h | NVM_BANK | TMAX_IINMAX | Bit[2:0] - Tmax:<br>0h: 100°C<br>1h: 105°C<br>2h: 110°C<br>3h: 115°C<br>4h: 120°C<br>5h: 85°C<br>6h: 90°C<br>7h: 95°C<br>Bit[5:3] - IINMAX (Scale IIN_READ):<br>0h = 31A; 1h = 15A; 2h = 7A; 3h = 3A; 4h = 1A |
| E9[5:0] | R/W | 10h | NVM_BANK | THERMAL_TCOMP_APA | Bit[3:0] - Thermal Compensation Offset:<br>0h: OFF<br>1h: -2.5°C<br>2h: 0.0°C<br>3h: 2.5°C<br>4h: 5.0°C<br>5h: 7.0°C<br>6h: 10.0°C<br>7h: 13.0°C<br>8h: 16.0°C<br>9h: 18.9°C<br>Ah: 21.6°C<br>Bh: 24.3°C<br>Ch: 27.0°C<br>Dh: 29.7°C<br>Eh: 32.4°C<br>Fh: 35.1°C<br>Bit[5:4]- Thermal APA:<br>0h = 75%; 1h = 82%; 2h = 91%;3h = 100% of TMAX |
| EA[7:0] | R/W | 10h | NVM_BANK | IMAX | Scale READ_IOUT (IMON = 2.5V will read IMAX)<br>[0h, 1h:FFh] = [0A, 1A: 255A], 1A/step |
| F3h[8:0] | | | | SPUP_dBAND_K | For Advanced User ONLY. Speedup (other than Bit[2:0] = Original) will disable frequency limiter so the switching frequency could increase with the load repetitive rate. The higher the capacitance, the faster the speed, which could lead to PSI1/2 to PS0 transition oscillation. Use with caution.<br>Bit[2:0] Speed UP<br>0h = Original; 1h = 2pF; 2h = 4pF; 3h = 6pF; 4h = 8pF; 5h = 10pF; 6h = 12pF; 7h = 16pF<br>Bit[5:3] VCOMP-dBand<br>0h = 25mV; 1h = 50mV; 2h = 75mv; 3h = 100mV; 4h = 125mV; 5h = 150mV; 6h = 175mV; 7h = 200mV;<br>Bit[7:6] K-Factor<br>0h = 0; 1h = 0.25; 2h = 0.5; 3h = 0.75<br>Bit[8] K-Disabled in DCM<br>0h = Enable; 1h = Disable |

TABLE 14. SMBus, PMBus, AND $I^2C$ WRITE AND READ REGISTERS

| COMMAND CODE | ACCESS | WRITE PROTECT LEVEL | DEFAULT | COMMAND NAME | DESCRIPTION |
|---|---|---|---|---|---|
| F4[5:0] | R/W | 10h | NVM_BANK | OCP_ICL_TRIM | Bit [3:0]- OCP Level (IOCP_AVG and ICL):<br>0h = 1.0, 1h = 1.1, 2h = 1.2; 3h = 1.4, 4h = 1.5, 5h = 1.6 of IMON<br>Bit [5:4]- Output Current Cycle Limiting (ICL):<br>0h = 125%, 01h = 110%, 2h = 100%; 3h = 95%, 4h = 0%,<br>5h = 85%, 6h = 80%, 7h = 70% |
| F5h[6:0] | R/W | 10h | NVM_BANK | SET_FREQ | 0h- 7Fh = 120kHz to 2025kHz, 15kHz/Step |
| F6h[6:0] | R/W | 10h | NVM_BANK | DVID_CFP | Bit[4:0] - Soft-Start and DVID Rate<br>0h = 0.315mV/µs; 1h = 0.625mV/µs; 2h = 1.25mV/µs;<br>3h = 2.5mV/µs; 4h = 2.85mV/µs; 5h = 3.07mV/µs;<br>6h = 3.33mV/µs; 7h = 3.63mV/µs, 8h = 4.0mV/µs,<br>9h = 4.44 mV/µs; Ah = 5.0mV/µs; Bh = 5.6mV/µs;<br>Ch = 6.66mV/µs; Dh = 8.0mV/µs; Eh = 10mV/µs;<br>Fh = 13.25mV/µs<br>Bit[6:5] - IN_OCP<br>0h = 100%, 1h = 110%, 2h = 120%,3h = 130% |
| F7h[2:0]<br>F8h[2:0]<br>F9h[2:0]<br>FAh[2:0]<br>FBh[2:0]<br>FCh[2:0] | R/W | 10h | NVM_BANK | F7 = BAL_TRIM_PHASE1<br>F8 = BAL_TRIM_PHASE2<br>F9 = BAL_TRIM_PHASE3<br>FA = BAL_TRIM_PHASE4<br>FB = BAL_TRIM_PHASE5<br>FC = BAL_TRIM_PHASE6 | 0h = -12% of full scale<br>1h = -9% of full scale<br>2h = -6% of full scale<br>3h = -3% of full scale<br>4h = No Offset<br>5h = +3% of full scale<br>6h = +6% of full scale<br>7h = +9% of full scale |
| FD[15:0] | R | | N/A | CHECK_SUM | Read Calculated CheckSum for individual NVM Bank checksum 10ms after execute EEh(80h) command and 60ms for the total checkSum after execute EEh(40h). |
| 03h | W | 40h | | CLEAR_FAULTS | Clear “Latched” Fault Registers in 78h For Selected Rail |
| ARA | R | | | ALERT_RESPONSE_ADDRESS | 8-bit Address: 0001_1001, 19h; 7-bit Address: 0C |
| **COMPENSATION REGISTERS** | | | | | |
| B0h[7:0] | R/W | 00h | NVM_BANK | $R_1$ | 250 Steps: 1.01018x<br>00h = 599.0<br>01h = 605.1<br>…<br>F9h = 7471 |
| B1h[4:0] | R/W | 00h | NVM_BANK | R2 | 30 Steps: 1.1x<br>00h = 2k<br>01h = 2.2<br>…<br>1Dh = 32K |
| B2h[4:0] | R/W | 00h | NVM_BANK | R3_6PHASE | 30 Steps: 1.1x<br>00h = 50k<br>01h= 55<br>…<br>1Dh =790<br>B2 = 1Fh, will Remove R3/C3 for all Phase Count.<br>Larger R3 and/or smaller C3 help reduce output noise coupling.<br>Recommend to keep R3/C3 the same values for highest phase count (Nmax) and Nmax-1 Phase count for smoother transition. |
| B3h[4:0] | R/W | 00h | NVM_BANK | R3_5PHASE | |
| B4h[4:0] | R/W | 00h | NVM_BANK | R3_4PHASE | |
| B5h[4:0] | R/W | 00h | NVM_BANK | R3_3PHASE | |
| B6h[4:0] | R/W | 00h | NVM_BANK | R3_2PHASE | |
| B7h[4:0] | R/W | 00h | NVM_BANK | R3_1PHASE | |
| B8h[5:0] | R/W | 00h | NVM_BANK | C1 | 42 Steps: 1.1x<br>00h = 10pF<br>01h = 11pF<br>…<br>29h = 500pF |

TABLE 14. SMBus, PMBus, AND I²C WRITE AND READ REGISTERS

| COMMAND CODE | ACCESS | WRITE PROTECT LEVEL | DEFAULT | COMMAND NAME | DESCRIPTION |
|---|---|---|---|---|---|
| B9h[5:0] | R/W | 00h | NVM_BANK | C2 | 42 Steps: 1.1x<br>00h = 330pF<br>01h = 363pF<br>...<br>29h = 16.4nF |
| BAh[5:0] | R/W | 00h | NVM_BANK | C3_6PHASE | 42 Steps: 1.1x<br>00h = 100pF<br>01h = 110pF<br>...<br>29h = 5.0nF |
| BBh[5:0] | R/W | 00h | NVM_BANK | C3_5PHASE | |
| BCh[5:0] | R/W | 00h | NVM_BANK | C3_4PHASE | |
| BDh[5:0] | R/W | 00h | NVM_BANK | C3_3PHASE | |
| BEh[5:0] | R/W | 00h | NVM_BANK | C3_2PHASE | |
| BFh[5:0] | R/W | 00h | NVM_BANK | C3_1PHASE | |
| DIRECT ACCESS TO EEPROM (ADVANCED USER AND TEST MODE ONLY) | | | | | |
| EC[7:0] | R/W | 00h | 00h | EEP_ADDR_REG | Give user access to EEPROM Address |
| ED[31:0] | BLOCK R/W | 00h | ALL ZEROs | EEP_DATA_REG | User Write 4-bytes (32-bits) of data into called address by EC |
| EE[7:0] | R/W | 00h | 0000h | EEP_ACTIVATE | EEPROM Control Register<br>Bit[0] = 1h, Start EEPROM Read Procedure<br>Bit[1] = 1h, Start EEPROM Write Procedure<br>Bit[5:2] - Reserved<br>Bit[6] = 1h, Generate Total Checksum (FD data).<br>Bit[7] = 1h, Generate Individual NVM BANK Checksum (FD data).<br>The device will declare busy at the assertion of this command, a new command addressed to this device should be sent 300ms afterward |

When the controller is reset by the Enable pins (TM_EN_OTP or EN_PWR_CFP), not $V_{CC}$, the programmed registers will be stored in operating memory.

TABLE 15. SMBus, PMBus, AND I²C TELEMETRIES

| CODE | WORD LENGTH (BYTE) | COMMAND NAME | DESCRIPTION | TYPICAL RESOLUTION |
|---|---|---|---|---|
| 88h[15:0] | TWO | READ_VIN | Input Voltage (25.5V = FF)<br>Formula: HEX2DEC(Readout)*0.1V | 8-BIT, 100mV |
| 89h[15:0] | TWO | READ_IIN | Input Current (1Fh = 10µA) | 5-BIT, IIN_FULL/31 |
| 8Bh[15:0] | TWO | READ_VOUT | VR Output Voltage (HEX2DEC(Readout)*0.05V) | 10-BIT, 5mV |
| 8Ch[15:0] | TWO | READ_IOUT | VR Output Current (2.5V IMON = ICCMAX)<br>HEX2DEC(Readout)*ICCMAX/255 | 8-BIT,~1A |
| 8Dh[15:0] | TWO | READ_TEMPERATURE_1 | TM Temperature (see Table 17)<br>Approximation Formula for Table 19<br>(T in °C): $-0.0000221*T^3 + 0.0094935*T^2 - 1.876*T + 213.75$ | 8-BIT, ~1°C* |
| 96h[15:0] | TWO | READ_POUT | Output Power | ~ 2W (~1A LSB @ 2V) |
| 97h[15:0] | TWO | READ_PIN | Input Power | ~12W (~1A LSB @ 12V) |
| 78h[8:0] | ONE | STATUS_BYTE | Fault Reporting:<br>Bit7 = Busy<br>Bit6 = 0<br>Bit5 = OverVoltage;<br>Bit4 = OverCurrent, ≥ $I_{MAX}$;<br>Bit3 = 0<br>Bit2 = Over-Temperature, ≥ $T_{MAX}$;<br>Bit1 = PMBus Communication Error<br>Bit0 = 0 | [BUSY, 0, OV, OC, 0, OT, CML, 0] |

**TABLE 15. SMBus, PMBus, AND $I^2C$ TELEMETRIES**

| CODE | WORD LENGTH (BYTE) | COMMAND NAME | DESCRIPTION | TYPICAL RESOLUTION |
|---|---|---|---|---|
| 79h[15:0] | TWO | STATUS_WORD | Lower Byte Fault Reporting (= 78h)::<br>Bit7 = Busy<br>Bit6 = 0<br>Bit5 = OverVoltage;<br>Bit4 = OverCurrent, ≥ $I_{MAX}$;<br>Bit3 = 0<br>Bit2= Over-Temperature, ≥ $T_{MAX}$;<br>Bit1 = PMBus Communication Error<br>Bit0 = 0<br><br>Upper Byte Fault Reporting:<br>Bit7 = $V_{OUT}$ OV, UV, and OV/UV Warning<br>Bit6 = $I_{OUT}$ OC<br>Bit5 = INPUT OCP >= 1F;<br>Bit[4:0] = 0 | Upper Byte: [$V_{OUT}$, $I_{OUT}$, IIN_OCP, 0, 0, 0, 0, 0]<br><br>Lower Byte: [BUSY, 0, OV, OC, 0, OT, CML, 0] |

NOTE: 88h-8Eh are two bytes word, while all others are one byte word.

**TABLE 16. LOCK_VID_OFFSET**

| D6h | SET_VID | SET_OFFSET | FINAL DAC | TARGETED APPLICATIONS |
|---|---|---|---|---|
| 00h | Not | Not | VBOOT | Not output voltage managed needed |
| 01h | Not | Yes | VBOOT+OFFSET | Small offset for compensation |
| 02h | Not | Yes | VBOOT + OFFSET | Large Offset for Voltage Margining |
| 03h | Yes | Yes | VID + OFFSET | Dynamic VID Operation Needed |

NOTE: The ISL6398 is designed to provide secondary output voltage control protection. When D6-0h, it keeps output voltage the same as boot up voltage. When operating in 01h option, SMBus/PMBus/$I^2C$'s OFFSET should only adjust slightly higher or lower (say ±20mV, but IC does not limit the range) for PCB loss compensation. To program full range of OFFSET, the user should select 02h or 03h options. 03h option gives users full control of the output voltage (VID+OFFSET) via SMBus/PMBus/$I^2C$, commonly used in over-clocking applications. Prior to a successful written PMBus VID or OFFSET, the controller will continue stay at boot up level.

TABLE 17. TYPICAL TEMPERATURE (8Dh and 8Eh)

| TEMPERATURE (°C) | $V_{TM(S)}$ OF $V_{CC}$ (%) | CODE (HEX) | TEMPERATURE (°C) | $V_{TM(S)}$ OF $V_{CC}$ (%) | CODE (HEX) |
|---|---|---|---|---|---|
| 0 | 95.0 | F2 | 71 | 58.9 | 96 |
| 1 | 94.8 | F1 | 72 | 58.2 | 94 |
| 2 | 94.6 | F1 | 73 | 57.5 | 92 |
| 3 | 94.4 | F0 | 74 | 56.7 | 90 |
| 4 | 94.1 | F0 | 75 | 56.0 | 8E |
| 5 | 93.9 | EF | 76 | 55.3 | 8D |
| 6 | 93.6 | EE | 77 | 54.6 | 8B |
| 7 | 93.4 | EE | 78 | 53.9 | 89 |
| 8 | 93.1 | ED | 79 | 53.2 | 87 |
| 9 | 92.8 | EC | 80 | 52.4 | 85 |
| 10 | 92.6 | EC | 81 | 51.7 | 83 |
| 11 | 92.3 | EB | 82 | 51.0 | 82 |
| 12 | 92.0 | EA | 83 | 50.3 | 80 |
| 13 | 91.6 | E9 | 84 | 49.6 | 7E |
| 14 | 91.3 | E8 | 85 | 48.9 | 7C |
| 15 | 91.0 | E7 | 86 | 48.2 | 7B |
| 16 | 90.7 | E7 | 87 | 47.6 | 79 |
| 17 | 90.3 | E6 | 88 | 46.9 | 77 |
| 18 | 89.9 | E5 | 89 | 46.2 | 75 |
| 19 | 89.6 | E4 | 90 | 45.5 | 74 |
| 20 | 89.2 | E3 | 91 | 44.9 | 72 |
| 21 | 88.8 | E2 | 92 | 44.2 | 70 |
| 22 | 88.4 | E1 | 93 | 43.5 | 6F |
| 23 | 88.0 | E0 | 94 | 42.9 | 6D |
| 24 | 87.6 | DF | 95 | 42.3 | 6B |
| 25 | 87.2 | DE | 96 | 41.6 | 6A |
| 26 | 86.7 | DD | 97 | 41.0 | 68 |
| 27 | 86.3 | DC | 98 | 40.4 | 66 |
| 28 | 85.8 | DA | 99 | 39.7 | 65 |
| 29 | 85.4 | D9 | 100 | 39.1 | 63 |
| 30 | 84.9 | D8 | 101 | 38.5 | 62 |
| 31 | 84.4 | D7 | 102 | 37.9 | 60 |
| 32 | 83.9 | D6 | 103 | 37.3 | 5F |
| 33 | 83.4 | D4 | 104 | 36.7 | 5D |
| 34 | 82.9 | D3 | 105 | 36.1 | 5C |
| 35 | 82.4 | D2 | 106 | 35.5 | 5A |
| 36 | 81.9 | D0 | 107 | 35.0 | 59 |
| 37 | 81.3 | CF | 108 | 34.4 | 57 |
| 38 | 80.8 | CD | 109 | 33.9 | 56 |

TABLE 17. TYPICAL TEMPERATURE (8Dh and 8Eh) (Continued)

| TEMPERATURE (°C) | $V_{TM(S)}$ OF $V_{CC}$ (%) | CODE (HEX) | TEMPERATURE (°C) | $V_{TM(S)}$ OF $V_{CC}$ (%) | CODE (HEX) |
|---|---|---|---|---|---|
| 39 | 80.2 | CC | 110 | 33.3 | 54 |
| 40 | 79.7 | CB | 111 | 32.8 | 53 |
| 41 | 79.1 | C9 | 112 | 32.2 | 52 |
| 42 | 78.5 | C8 | 113 | 31.7 | 50 |
| 43 | 77.9 | C6 | 114 | 31.2 | 4F |
| 44 | 77.3 | C5 | 115 | 30.7 | 4E |
| 45 | 76.7 | C3 | 116 | 30.2 | 4D |
| 46 | 76.1 | C2 | 117 | 29.7 | 4B |
| 47 | 75.5 | C0 | 118 | 29.2 | 4A |
| 48 | 74.8 | BE | 119 | 28.7 | 49 |
| 49 | 74.2 | BD | 120 | 28.2 | 48 |
| 50 | 73.5 | BB | 121 | 27.8 | 46 |
| 51 | 72.9 | B9 | 122 | 27.3 | 45 |
| 52 | 72.2 | B8 | 123 | 26.9 | 44 |
| 53 | 71.6 | B6 | 124 | 26.4 | 43 |
| 54 | 70.9 | B4 | 125 | 26.0 | 42 |
| 55 | 70.2 | B3 | 126 | 25.5 | 41 |
| 56 | 69.5 | B1 | 127 | 25.1 | 40 |
| 57 | 68.8 | AF | 128 | 24.7 | 3E |
| 58 | 68.2 | AD | 129 | 24.3 | 3D |
| 59 | 67.5 | AC | 130 | 23.9 | 3C |
| 60 | 66.8 | AA | 131 | 23.5 | 3B |
| 61 | 66.1 | A8 | 132 | 23.1 | 3A |
| 62 | 65.4 | A6 | 133 | 22.7 | 39 |
| 63 | 64.6 | A4 | 134 | 22.3 | 38 |
| 64 | 63.9 | A3 | 135 | 21.9 | 37 |
| 65 | 63.2 | A1 | 136 | 21.6 | 36 |
| 66 | 62.5 | 9F | 137 | 21.2 | 36 |
| 67 | 61.8 | 9D | 138 | 20.8 | 35 |
| 68 | 61.1 | 9B | 139 | 20.5 | 34 |
| 69 | 60.3 | 99 | 140 | 20.1 | 33 |
| 70 | 59.6 | 98 | | | |

TABLE 18. VOUT_MAX (24h) in 5MV/STEP MODE

| VOUT (V) | Code (HEX) | VOUT (V) | Code (HEX) | VOUT (V) | Code (HEX) |
|---|---|---|---|---|---|
| 0.000 | 0 | 0.885 | 80 | 1.525 | 100 |
| 0.250 | 1 | 0.890 | 81 | 1.530 | 101 |
| 0.255 | 2 | 0.895 | 82 | 1.535 | 102 |
| 0.260 | 3 | 0.900 | 83 | 1.540 | 103 |
| 0.265 | 4 | 0.905 | 84 | 1.545 | 104 |
| 0.270 | 5 | 0.910 | 85 | 1.550 | 105 |
| 0.275 | 6 | 0.915 | 86 | 1.555 | 106 |
| 0.280 | 7 | 0.920 | 87 | 1.560 | 107 |
| 0.285 | 8 | 0.925 | 88 | 1.565 | 108 |
| 0.290 | 9 | 0.930 | 89 | 1.570 | 109 |
| 0.295 | A | 0.935 | 8A | 1.575 | 10A |
| 0.300 | B | 0.940 | 8B | 1.580 | 10B |
| 0.305 | C | 0.945 | 8C | 1.585 | 10C |
| 0.310 | D | 0.950 | 8D | 1.590 | 10D |
| 0.315 | E | 0.955 | 8E | 1.595 | 10E |
| 0.320 | F | 0.960 | 8F | 1.600 | 10F |
| 0.325 | 10 | 0.965 | 90 | 1.605 | 110 |
| 0.330 | 11 | 0.970 | 91 | 1.610 | 111 |
| 0.335 | 12 | 0.975 | 92 | 1.615 | 112 |
| 0.340 | 13 | 0.980 | 93 | 1.620 | 113 |
| 0.345 | 14 | 0.985 | 94 | 1.625 | 114 |
| 0.350 | 15 | 0.990 | 95 | 1.630 | 115 |
| 0.355 | 16 | 0.995 | 96 | 1.635 | 116 |
| 0.360 | 17 | 1.000 | 97 | 1.640 | 117 |
| 0.365 | 18 | 1.005 | 98 | 1.645 | 118 |
| 0.370 | 19 | 1.010 | 99 | 1.650 | 119 |
| 0.375 | 1A | 1.015 | 9A | 1.655 | 11A |
| 0.380 | 1B | 1.020 | 9B | 1.660 | 11B |
| 0.385 | 1C | 1.025 | 9C | 1.665 | 11C |
| 0.390 | 1D | 1.030 | 9D | 1.670 | 11D |
| 0.395 | 1E | 1.035 | 9E | 1.675 | 11E |
| 0.400 | 1F | 1.040 | 9F | 1.680 | 11F |
| 0.405 | 20 | 1.045 | A0 | 1.685 | 120 |
| 0.410 | 21 | 1.050 | A1 | 1.690 | 121 |
| 0.415 | 22 | 1.055 | A2 | 1.695 | 122 |
| 0.420 | 23 | 1.060 | A3 | 1.700 | 123 |
| 0.425 | 24 | 1.065 | A4 | 1.705 | 124 |
| 0.430 | 25 | 1.070 | A5 | 1.710 | 125 |
| 0.435 | 26 | 1.075 | A6 | 1.715 | 126 |

TABLE 18. VOUT_MAX (24h) in 5MV/STEP MODE (Continued)

| VOUT (V) | Code (HEX) | VOUT (V) | Code (HEX) | VOUT (V) | Code (HEX) |
|---|---|---|---|---|---|
| 0.440 | 27 | 1.080 | A7 | 1.720 | 127 |
| 0.445 | 28 | 1.085 | A8 | 1.725 | 128 |
| 0.450 | 29 | 1.090 | A9 | 1.730 | 129 |
| 0.455 | 2A | 1.095 | AA | 1.735 | 12A |
| 0.460 | 2B | 1.100 | AB | 1.740 | 12B |
| 0.465 | 2C | 1.105 | AC | 1.745 | 12C |
| 0.470 | 2D | 1.110 | AD | 1.750 | 12D |
| 0.475 | 2E | 1.115 | AE | 1.755 | 12E |
| 0.480 | 2F | 1.120 | AF | 1.760 | 12F |
| 0.485 | 30 | 1.125 | B0 | 1.765 | 130 |
| 0.490 | 31 | 1.130 | B1 | 1.770 | 131 |
| 0.495 | 32 | 1.135 | B2 | 1.775 | 132 |
| 0.500 | 33 | 1.140 | B3 | 1.780 | 133 |
| 0.505 | 34 | 1.145 | B4 | 1.785 | 134 |
| 0.510 | 35 | 1.150 | B5 | 1.790 | 135 |
| 0.515 | 36 | 1.155 | B6 | 1.795 | 136 |
| 0.520 | 37 | 1.160 | B7 | 1.800 | 137 |
| 0.525 | 38 | 1.165 | B8 | 1.805 | 138 |
| 0.530 | 39 | 1.170 | B9 | 1.810 | 139 |
| 0.535 | 3A | 1.175 | BA | 1.815 | 13A |
| 0.540 | 3B | 1.180 | BB | 1.820 | 13B |
| 0.545 | 3C | 1.185 | BC | 1.825 | 13C |
| 0.550 | 3D | 1.190 | BD | 1.830 | 13D |
| 0.555 | 3E | 1.195 | BE | 1.835 | 13E |
| 0.560 | 3F | 1.200 | BF | 1.840 | 13F |
| 0.565 | 40 | 1.205 | C0 | 1.845 | 140 |
| 0.570 | 41 | 1.210 | C1 | 1.850 | 141 |
| 0.575 | 42 | 1.215 | C2 | 1.855 | 142 |
| 0.580 | 43 | 1.220 | C3 | 1.860 | 143 |
| 0.585 | 44 | 1.225 | C4 | 1.865 | 144 |
| 0.590 | 45 | 1.230 | C5 | 1.870 | 145 |
| 0.595 | 46 | 1.235 | C6 | 1.875 | 146 |
| 0.600 | 47 | 1.240 | C7 | 1.880 | 147 |
| 0.605 | 48 | 1.245 | C8 | 1.885 | 148 |
| 0.610 | 49 | 1.250 | C9 | 1.890 | 149 |
| 0.615 | 4A | 1.255 | CA | 1.895 | 14A |
| 0.620 | 4B | 1.260 | CB | 1.900 | 14B |
| 0.625 | 4C | 1.265 | CC | 1.905 | 14C |
| 0.630 | 4D | 1.270 | CD | 1.910 | 14D |

TABLE 18. VOUT_MAX (24h) In 5MV/STEP MODE (Continued)

| VOUT (V) | Code (HEX) | VOUT (V) | Code (HEX) | VOUT (V) | Code (HEX) |
|---|---|---|---|---|---|
| 0.635 | 4E | 1.275 | CE | 1.915 | 14E |
| 0.640 | 4F | 1.280 | CF | 1.920 | 14F |
| 0.645 | 50 | 1.285 | D0 | 1.925 | 150 |
| 0.650 | 51 | 1.290 | D1 | 1.930 | 151 |
| 0.655 | 52 | 1.295 | D2 | 1.935 | 152 |
| 0.660 | 53 | 1.300 | D3 | 1.940 | 153 |
| 0.665 | 54 | 1.305 | D4 | 1.945 | 154 |
| 0.670 | 55 | 1.310 | D5 | 1.950 | 155 |
| 0.675 | 56 | 1.315 | D6 | 1.955 | 156 |
| 0.680 | 57 | 1.320 | D7 | 1.960 | 157 |
| 0.685 | 58 | 1.325 | D8 | 1.965 | 158 |
| 0.690 | 59 | 1.330 | D9 | 1.970 | 159 |
| 0.695 | 5A | 1.335 | DA | 1.975 | 15A |
| 0.700 | 5B | 1.340 | DB | 1.980 | 15B |
| 0.705 | 5C | 1.345 | DC | 1.985 | 15C |
| 0.710 | 5D | 1.350 | DD | 1.990 | 15D |
| 0.715 | 5E | 1.355 | DE | 1.995 | 15E |
| 0.720 | 5F | 1.360 | DF | 2.000 | 15F |
| 0.725 | 60 | 1.365 | E0 | 2.005 | 160 |
| 0.730 | 61 | 1.370 | E1 | 2.010 | 161 |
| 0.735 | 62 | 1.375 | E2 | 2.015 | 162 |
| 0.740 | 63 | 1.380 | E3 | 2.020 | 163 |
| 0.745 | 64 | 1.385 | E4 | 2.025 | 164 |
| 0.750 | 65 | 1.390 | E5 | 2.030 | 165 |
| 0.755 | 66 | 1.395 | E6 | 2.035 | 166 |
| 0.760 | 67 | 1.400 | E7 | 2.040 | 167 |
| 0.765 | 68 | 1.405 | E8 | 2.045 | 168 |
| 0.770 | 69 | 1.410 | E9 | 2.050 | 169 |
| 0.775 | 6A | 1.415 | EA | 2.055 | 16A |
| 0.780 | 6B | 1.420 | EB | 2.060 | 16B |
| 0.785 | 6C | 1.425 | EC | 2.065 | 16C |
| 0.790 | 6D | 1.430 | ED | 2.070 | 16D |
| 0.795 | 6E | 1.435 | EE | 2.075 | 16E |
| 0.800 | 6F | 1.440 | EF | 2.080 | 16F |
| 0.805 | 70 | 1.445 | F0 | 2.085 | 170 |
| 0.810 | 71 | 1.450 | F1 | 2.090 | 171 |
| 0.815 | 72 | 1.455 | F2 | 2.095 | 172 |
| 0.820 | 73 | 1.460 | F3 | 2.100 | 173 |
| 0.825 | 74 | 1.465 | F4 | 2.105 | 174 |

TABLE 18. VOUT_MAX (24h) In 5MV/STEP MODE (Continued)

| VOUT (V) | Code (HEX) | VOUT (V) | Code (HEX) | VOUT (V) | Code (HEX) |
|---|---|---|---|---|---|
| 0.830 | 75 | 1.470 | F5 | 2.110 | 175 |
| 0.835 | 76 | 1.475 | F6 | 2.115 | 176 |
| 0.840 | 77 | 1.480 | F7 | 2.120 | 177 |
| 0.845 | 78 | 1.485 | F8 | 2.125 | 178 |
| 0.850 | 79 | 1.490 | F9 | 2.130 | 179 |
| 0.855 | 7A | 1.495 | FA | 2.135 | 17A |
| 0.860 | 7B | 1.500 | FB | 2.140 | 17B |
| 0.865 | 7C | 1.505 | FC | 2.145 | 17C |
| 0.870 | 7D | 1.510 | FD | 2.150 | 17D |
| 0.875 | 7E | 1.515 | FE | 2.155 | 17E |
| 0.880 | 7F | 1.520 | FF | | |

# General Design Guide

This design guide is intended to provide a high-level explanation of the steps necessary to create a multiphase power converter. It is assumed that the reader is familiar with many of the basic skills and ‘techniques referenced in the following. In addition to this guide, Intersil provides complete reference designs, which include schematics, bills of materials, and example board layouts for multi-phase VR applications.

## Power Stages

The first step in designing a multiphase converter is to determine the number of phases. This determination depends heavily upon the cost analysis, which in turn depends on system constraints that differ from one design to the next. Principally, the designer will be concerned with whether components can be mounted on both sides of the circuit board; whether through-hole components are permitted; and the total board space available for power supply circuitry. Generally speaking, the most economical solutions are those in which each phase handles between 15A and 25A. All surface mount designs will tend toward the lower end of this current range. If through-hole MOSFETs and inductors can be used, higher per-phase currents are possible. In cases where board space is the limiting constraint, current can be pushed as high as 40A per phase, but these designs require heat sinks and forced air to cool the MOSFETs, inductors and heat dissipating surfaces.

### MOSFETs

The choice of MOSFETs depends on the current each MOSFET will be required to conduct; the switching frequency; the capability of the MOSFETs to dissipate heat; and the availability and nature of heat sinking and air flow.

### LOWER MOSFET POWER CALCULATION

The calculation for heat dissipated in the lower MOSFET is simple, since virtually all of the heat loss in the lower MOSFET is due to current conducted through the channel resistance ($r_{DS(ON)}$). In Equation 33, $I_M$ is the maximum continuous output current; $I_{P-P}$ is the peak-to-peak inductor current (see Equation 1 on page 15); d is the duty cycle ($V_{OUT}/V_{IN}$); and L is the per-channel inductance.

$$P_{LOW,1} = r_{DS(ON)}\left[\left(\frac{I_M}{N}\right)^2 + \frac{I_{p-p}^2}{12}\right]\cdot(1-d) \quad \text{(EQ. 33)}$$

An additional term can be added to the lower MOSFET loss equation to account for additional loss accrued during the dead time when inductor current is flowing through the lower MOSFET body diode. This term is dependent on the diode forward voltage at $I_M$, $V_{D(ON)}$; the switching frequency, $F_{SW}$; and the length of dead times, $t_{d1}$ and $t_{d2}$, at the beginning and the end of the lower MOSFET conduction interval respectively.

$$P_{LOW,2} = V_{D(ON)}F_{SW}\left[\left(\frac{I_M}{N}+\frac{I_{p-p}}{2}\right)t_{d1} + \left(\frac{I_M}{N}-\frac{I_{p-p}}{2}\right)t_{d2}\right] \quad \text{(EQ. 34}$$

Finally, the power loss of output capacitance of the lower MOSFET is approximated in Equation 35:

$$P_{LOW,3} \approx \frac{2}{3}\cdot V_{IN}^{1.5}\cdot C_{OSS_LOW}\cdot\sqrt{V_{DS_LOW}}\cdot F_{SW} \quad \text{(EQ. 35)}$$

where $C_{OSS_LOW}$ is the output capacitance of lower MOSFET at the test voltage of $V_{DS_LOW}$. Depending on the amount of ringing, the actual power dissipation will be slightly higher than this.

Thus the total maximum power dissipated in each lower MOSFET is approximated by the summation of $P_{LOW,1}$, $P_{LOW,2}$ and $P_{LOW,3}$.

### UPPER MOSFET POWER CALCULATION

In addition to $r_{DS(ON)}$ losses, a large portion of the upper MOSFET losses are due to currents conducted across the input voltage ($V_{IN}$) during switching. Since a substantially higher portion of the upper MOSFET losses are dependent on switching frequency, the power calculation is more complex. Upper MOSFET losses can be divided into separate components involving the upper-MOSFET switching times; the lower MOSFET body-diode reverse-recovery charge, $Q_{rr}$; and the upper MOSFET $r_{DS(ON)}$ conduction loss.

When the upper MOSFET turns off, the lower MOSFET does not conduct any portion of the inductor current until the voltage at the phase node falls below ground. Once the lower MOSFET begins conducting, the current in the upper MOSFET falls to zero as the current in the lower MOSFET ramps up to assume the full inductor current. In Equation 36, the required time for this commutation is $t_1$ and the approximated associated power loss is $P_{UP,1}$.

$$P_{UP,1} \approx V_{IN}\left(\frac{I_M}{N}+\frac{I_{p-p}}{2}\right)\left(\frac{t_1}{2}\right)F_{SW} \quad \text{(EQ. 36)}$$

At turn on, the upper MOSFET begins to conduct and this transition occurs over a time $t_2$. In Equation 37, the approximate power loss is $P_{UP,2}$.

$$P_{UP,2} \approx V_{IN}\left(\frac{I_M}{N}-\frac{I_{p-p}}{2}\right)\left(\frac{t_2}{2}\right)F_{SW} \quad \text{(EQ. 37)}$$

A third component involves the lower MOSFET's reverse-recovery charge, $Q_{rr}$. Since the inductor current has fully commutated to the upper MOSFET before the lower MOSFET's body diode can draw all of $Q_{rr}$, it is conducted through the upper MOSFET across $V_{IN}$. The power dissipated as a result is $P_{UP,3}$ and is approximated in Equation 38:

$$P_{UP,3} = V_{IN}Q_{rr}F_{SW} \quad \text{(EQ. 38)}$$

The resistive part of the upper MOSFET's is given in Equation 33 as $P_{UP,4}$.

$$P_{UP,4} \approx r_{DS(ON)}\left[\left(\frac{I_M}{N}\right)^2 + \frac{I_{p-p}^2}{12}\right]\cdot d \quad \text{(EQ. 39)}$$

Equation 40 accounts for some power loss due to the drain-source parasitic inductance ($L_{DS}$, including PCB parasitic inductance) of the upper MOSFETs, although it is not the exact:

$$P_{UP,5} \approx L_{DS}\left(\frac{I_M}{N}+\frac{I_{p-p}}{2}\right)^2 \quad \text{(EQ. 40)}$$

Finally, the power loss of output capacitance of the upper MOSFET is approximated in Equation 41:

$$P_{UP,6} \approx \frac{2}{3}\cdot V_{IN}^{1.5}\cdot C_{OSS_UP}\cdot\sqrt{V_{DS_UP}}\cdot F_{SW} \quad \text{(EQ. 41)}$$

where $C_{OSS_UP}$ is the output capacitance of lower MOSFET at test voltage of $V_{DS_UP}$. Depending on the amount of ringing, the actual power dissipation will be slightly higher than this.

The total power dissipated by the upper MOSFET at full load can now be approximated as the summation of the results from Equations 36 to 41. Since the power equations depend on MOSFET parameters, choosing the correct MOSFETs can be an iterative process involving repetitive solutions to the loss equations for different MOSFETs and different switching frequencies.

## Current Sensing Resistor

The resistors connected to the ISEN+ pins determine the gains in the load-line regulation loop and the channel-current balance loop as well as setting the overcurrent trip point. Select values for these resistors by using Equation 42:

$$R_{ISEN} = \frac{R_X}{100\times10^{-6}}\frac{I_{OCP}}{N} \quad \text{(EQ. 42)}$$

where $R_{ISEN}$ is the sense resistor connected to the ISEN+ pin, N is the active channel number, $R_X$ is the resistance of the current

sense element, either the DCR of the inductor or $R_{SENSE}$ depending on the sensing method, and $I_{OCP}$ is the desired overcurrent trip point. Typically, $I_{OCP}$ can be chosen to be 1.2 times the maximum load current of the specific application.

With integrated temperature compensation, the sensed current signal is independent of the operational temperature of the power stage, i.e. the temperature effect on the current sense element $R_X$ is cancelled by the integrated temperature compensation function. $R_X$ in Equation 42 should be the resistance of the current sense element at the room temperature.

When the integrated temperature compensation function is disabled by selecting “OFF” TCOMP code, the sensed current will be dependent on the operational temperature of the power stage, since the DC resistance of the current sense element may be changed according to the operational temperature. $R_X$ in Equation 42 should be the maximum DC resistance of the current sense element at the all operational temperature.

In certain circumstances, especially for a design with an unsymmetrical layout, it may be necessary to adjust the value of one or more ISEN resistors for VR. When the components of one or more channels are inhibited from effectively dissipating their heat so that the affected channels run cooler than the average, choose new, larger values of $R_{ISEN}$ for the affected phases (see the section entitled “Current Sensing” on page 18). Choose $R_{ISEN,2}$ in proportion to the desired increase in temperature rise in order to cause proportionally more current to flow in the cooler phase, as shown in Equation 43:

$$R_{ISEN,2} = R_{ISEN}\frac{\Delta T_2}{\Delta T_1} \quad \text{(EQ. 43)}$$

$$\Delta R_{ISEN} = R_{ISEN,2} - R_{ISEN}$$

In Equation 43, make sure that $\Delta T_2$ is the desired temperature rise above the ambient temperature, and $\Delta T_1$ is the measured temperature rise above the ambient temperature. Since all channels’ $R_{ISEN}$ are integrated and set by one RSET, a resistor ($\Delta R_{ISEN}$) can be in series with the cooler channel’s ISEN+ pin to raise this phase current. However, the ISL6398 can adjust the thermal/current balance of the VR via registers F7 to FC.

## Load-line Regulation Resistor

The load-line regulation resistor is labelled $R_{FB}$ in Figure 11. Its value depends on the desired loadline requirement of the application.

The desired loadline can be calculated using Equation 44:

$$R_{LL} = \frac{V_{DROOP}}{I_{FL}} \quad \text{(EQ. 44)}$$

where $I_{FL}$ is the full load current of the specific application, and $VR_{DROOP}$ is the desired voltage droop under the full load condition.

Based on the desired loadline $R_{LL}$, the loadline regulation resistor can be calculated using Equation 45:

$$R_{FB} = \frac{N \cdot R_{ISEN} \cdot R_{LL}}{R_X} \quad \text{(EQ. 45)}$$

where N is the active channel number, $R_{ISEN}$ is the sense resistor connected to the ISEN+ pin, and $R_X$ is the resistance of the current sense element, either the DCR of the inductor or $R_{SEN}$ depending on the sensing method.

If one or more of the current sense resistors are adjusted for thermal balance (as in Equation 43), the load-line regulation resistor should be selected based on the average value of the current sensing resistors, as given in Equation 46:

$$R_{FB} = \frac{R_{LL}}{R_X}\sum_n R_{ISEN(n)} \quad \text{(EQ. 46)}$$

where $R_{ISEN(n)}$ is the current sensing resistor connected to the $n^{th}$ ISEN+ pin.

## Output Filter Design

The output inductors and the output capacitor bank together to form a low-pass filter responsible for smoothing the pulsating voltage at the phase nodes. The output filter also must provide the transient energy until the regulator can respond. Because it has a low bandwidth compared to the switching frequency, the output filter necessarily limits the system transient response. The output capacitor must supply or sink load current while the current in the output inductors increases or decreases to meet the demand.

In high-speed converters, the output capacitor bank is usually the most costly (and often the largest) part of the circuit. Output filter design begins with minimizing the cost of this part of the circuit. The critical load parameters in choosing the output capacitors are the maximum size of the load step, DI; the load-current slew rate, di/dt; and the maximum allowable output-voltage deviation under transient loading, $DV_{MAX}$. Capacitors are characterized according to their capacitance, ESR, and ESL (equivalent series inductance).

At the beginning of the load transient, the output capacitors supply all of the transient current. The output voltage will initially deviate by an amount approximated by the voltage drop across the ESL. As the load current increases, the voltage drop across the ESR increases linearly until the load current reaches its final value. The capacitors selected must have sufficiently low ESL and ESR so that the total output-voltage deviation is less than the allowable maximum. Neglecting the contribution of inductor current and regulator response, the output voltage initially deviates by an amount, as shown in Equation 47:

$$\Delta V \approx (ESL)\frac{di}{dt} + (ESR)\Delta I \quad \text{(EQ. 47)}$$

The filter capacitor must have sufficiently low ESL and ESR so that $\Delta V < \Delta V_{MAX}$.

Most capacitor solutions rely on a mixture of high-frequency capacitors with relatively low capacitance in combination with bulk capacitors having high capacitance but limited high frequency performance. Minimizing the ESL of the high frequency capacitors allows them to support the output voltage as the current increases. Minimizing the ESR of the bulk capacitors allows them to supply the increased current with less output voltage deviation.

The ESR of the bulk capacitors also creates the majority of the output-voltage ripple. As the bulk capacitors sink and source the

inductor AC ripple current (see "Interleaving" on page 15 and Equation 2), a voltage develops across the bulk-capacitor ESR equal to $I_{c(p-p)}$ (ESR). Thus, once the output capacitors are selected, the maximum allowable ripple voltage, $V_{P-P(MAX)}$, determines the lower limit on the inductance, as shown in Equation 48.

$$L \geq ESR \cdot \frac{V_{OUT} \cdot K_{RCM}}{F_{SW} \cdot V_{IN} \cdot V_{PP(MAX)}} \quad \text{(EQ. 48)}$$

Since the capacitors are supplying a decreasing portion of the load current while the regulator recovers from the transient, the capacitor voltage becomes slightly depleted. The output inductors must be capable of assuming the entire load current before the output voltage decreases more than $DV_{MAX}$. This places an upper limit on inductance.

Equation 49 gives the upper limit on L for the cases when the trailing edge of the current transient causes a greater output-voltage deviation than the leading edge. Equation 50 addresses the leading edge. Normally, the trailing edge dictates the selection of L because duty cycles are usually less than 50%. Nevertheless, both inequalities should be evaluated, and L should be selected based on the lower of the two results. In each equation, L is the per-channel inductance, C is the total output capacitance, and N is the number of active channels.

$$L \leq \frac{2 \cdot N \cdot C \cdot V_{OUT}}{(\Delta I)^2}\left[\Delta V_{MAX} - \Delta I \cdot ESR\right] \quad \text{(EQ. 49)}$$

$$L \leq \frac{1.25 \cdot N \cdot C}{(\Delta I)^2}\left[\Delta V_{MAX} - \Delta I \cdot ESR\right]\left(V_{IN} - V_{OUT}\right) \quad \text{(EQ. 50)}$$

## Switching Frequency Selection

There are a number of variables to consider when choosing the switching frequency, as there are considerable effects on the upper-MOSFET loss calculation. These effects are outlined in "MOSFETs" on page 49, and they establish the upper limit for the switching frequency. The lower limit is established by the requirement for fast transient response and small output-voltage ripple as outlined in "Output Filter Design" on page 51. Choose the lowest switching frequency that allows the regulator to meet the transient-response and output-voltage ripple requirements.

## Input Capacitor Selection

The input capacitors are responsible for sourcing the AC component of the input current flowing into the upper MOSFETs. Their RMS current capacity must be sufficient to handle the AC component of the current drawn by the upper MOSFETs which is related to duty cycle and the number of active phases. The input RMS current can be calculated with Equation 51.

$$I_{IN,RMS} = \sqrt{K_{IN,CM}^2 \bullet Io^2 + K_{RAMP,CM}^2 \bullet I_{Lo,p-p}^2} \quad \text{(EQ. 51)}$$

$$K_{IN,CM} = \sqrt{\frac{(N \bullet D - m + 1) \bullet (m - N \bullet D)}{N^2}} \quad \text{(EQ. 52)}$$

$$K_{RAMP,CM} = \sqrt{\frac{m^2(N \bullet D - m + 1)^3 + (m-1)^2(m - N \bullet D)^3}{12N^2D^2}} \quad \text{(EQ. 53)}$$

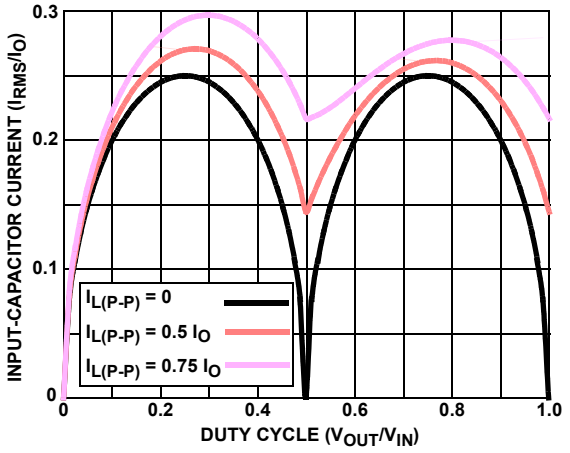


FIGURE 37. NORMALIZED INPUT-CAPACITOR RMS CURRENT vs DUTY CYCLE FOR 2-PHASE CONVERTER

For a 2-phase design, use Figure 37 to determine the input capacitor RMS current requirement given the duty cycle, maximum sustained output current ($I_O$), and the ratio of the per-phase peak-to-peak inductor current ($I_{L(P-)P}$) to $I_O$. Select a bulk capacitor with a ripple current rating which will minimize the total number of input capacitors required to support the RMS current calculated. The voltage rating of the capacitors should also be at least 1.25 times greater than the maximum input voltage.

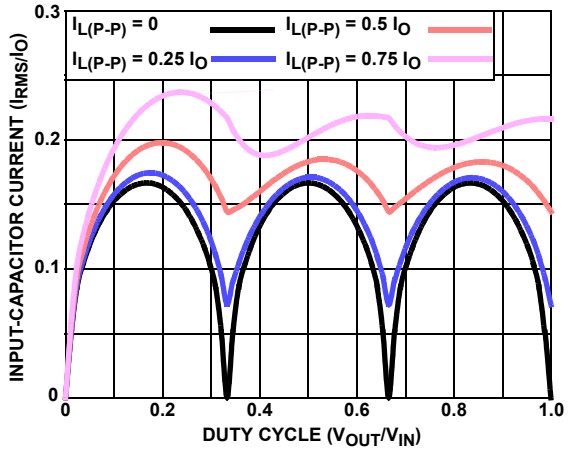


FIGURE 38. NORMALIZED INPUT-CAPACITOR RMS CURRENT vs DUTY CYCLE FOR 3-PHASE CONVERTER

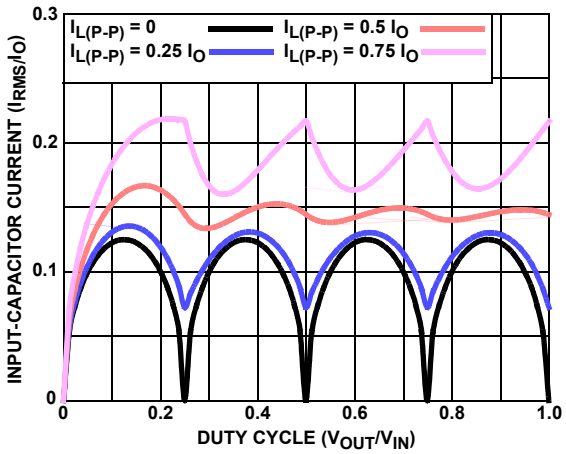


FIGURE 39. NORMALIZED INPUT-CAPACITOR RMS CURRENT vs DUTY CYCLE FOR 4-PHASE CONVERTER

Figures 38 and 39 provide the same input RMS current information for 3 and 4-phase designs respectively. Use the same approach to selecting the bulk capacitor type and number as previously described.

Low capacitance, high-frequency ceramic capacitors are needed in addition to the bulk capacitors to suppress leading and falling edge voltage spikes. The result from the high current slew rates produced by the upper MOSFETs turn on and off. Select low ESL ceramic capacitors and place one as close as possible to each upper MOSFET drain to minimize board parasitic impedances and maximize noise suppression.

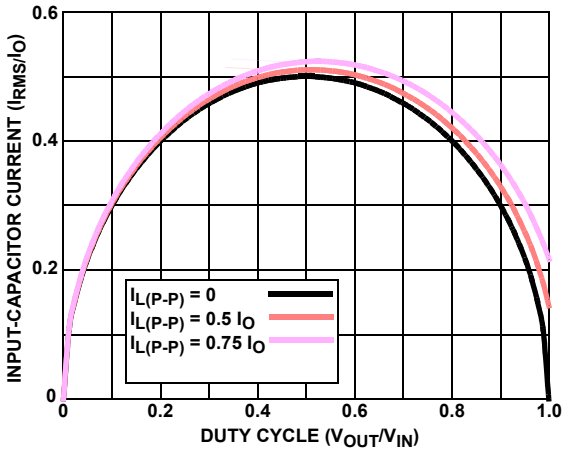


FIGURE 40. NORMALIZED INPUT-CAPACITOR RMS CURRENT vs DUTY CYCLE FOR SINGLE-PHASE CONVERTER

### MULTIPHASE RMS IMPROVEMENT

Figure 40 is provided as a reference to demonstrate the dramatic reductions in input-capacitor RMS current upon the implementation of the multiphase topology. For example, compare the input RMS current requirements of a 2-phase converter versus that of a single phase. Assume both converters have a duty cycle of 0.25, maximum sustained output current of 40A, and a ratio of $I_{L,PP}$ to $I_O$ of 0.5. The single phase converter would require 17.3$A_{RMS}$ current capacity while the 2-phase converter would only require 10.9$A_{RMS}$. The advantages become even more pronounced when output current is increased and additional phases are added to keep the component cost down relative to the single phase approach.

# Layout and Design Considerations

The following layout and design strategies are intended to minimize the noise coupling, the impact of board parasitic impedances on converter performance and to optimize the heat-dissipating capabilities of the printed-circuit board. This section highlights some important practices which should be followed during the layout process. A layout check list is available for use.

## Pin Noise Sensitivity, Design and Layout Consideration

Table 19 shows the noise sensitivity of each pin and their design and layout consideration. All pins and external components should not be across switching nodes and should be placed in general proximity to the controller.

TABLE 19. PIN DESIGN AND/OR LAYOUT CONSIDERATION

| PIN NAME | NOISE SENSITIVE | DESCRIPTION |
|---|---|---|
| ISENIN- | Yes | Connect to input supply side of the input inductor or resistor pin with L/DCR or ESL/R matching network in close proximity to the controller. Place NTC in the close proximity to input inductor for thermal compensation. A local 10nF decoupling capacitor between ISENIN+ and ISENIN- is preferred. DCR sensing with thermal compensation will yield no load offset reading. Resistor sensing is preferred for accurate input current reporting. > 40 µs time constant $[C*R_{IN1}*R_{IN2})/(R_{IN1}+R_{IN2})]$ might be needed if the average input current reporting is preferred; and it also reduces chance to trigger CFP during heavy load transient. |
| ISENIN+ | Yes | Connects to the Drain of High-side MOSFET side of the input inductor or resistor pin. A local 0.1µF ceramic capacitor is recommended. When not used, connect ISENIN+ to $V_{IN}$ and a resistor divider with a ratio of 1/3 on ISENIN± pin, say 499kΩ in between ISENIN± pins and then 1.5MΩ from ISENIN- to ground (see Figure 29). The voltage of this pin is used feed-forward compensation. |
| EN_PWR_CFP | Yes | There is an internal 1µs filter. Decoupling capacitor is NOT needed, but if needed, use a low time constant one to avoid too large a shut-down delay. It will also be the output of CFP function: 34Ω strong pull-up. 25 mils spacing from other traces. |
| RGND | Yes | Pair up (within 20 mils) with the positive rail remote sensing line that connected to FB resistor, and routing them to the load sensing points. |
| VSEN | Yes | Pair up (within 20 mils) with the negative rail of remote sensing line that connected to RGND, and route them to the load sensing points. |

**TABLE 19. PIN DESIGN AND/OR LAYOUT CONSIDERATION (Continued)**

| PIN NAME | NOISE SENSITIVE | DESCRIPTION |
|---|---|---|
| VSEN_OVP | Yes | Used for Overvoltage protection sensing. |
| VRSEL_ADDR<br><br>NVM_BANK_BT | No | Register setting is locked prior to soft-start. Since the external resistor-divider ratio compares with the internal resistor ratio of the $V_{CC}$, their rail should be exactly tied to the same point as $V_{CC}$ pin, not through an RC filter. DON'T use decoupling capacitors on these pins. |
| VR_RDY | No | Open drain and high dv/dt pin. Avoid its pull-up higher than $V_{CC}$. Tie it to ground when not used. |
| IMON | Yes | Refer to GND, not RGND. Place R and C in general proximity to the controller. The time constant of RC should be sufficient, typically 200µs, as an averaging function for the digital IOUT. |
| VR_HOT# | No | Open drain and high dv/dt pin during transitions. Avoid its pull-up rail higher than $V_{CC}$ . 30 mils spacing from other traces. |
| SM_PM_I2CL<br>SM_PM_I2DA | Yes | 50kHz to 1.5MHz signal when the SMBus, PMBus, or $I^2C$ is sending commands, pairing up with PMALERT# and routing carefully back to SMBus, PMBus or $I^2C$. 20 mils spacing within I2DATA, PMALERT#, and I2CLK; and more than 30 mils to all other signals. Refer to the SMBus, PMBus or $I^2C$ design guidelines and place proper terminated (pull-up) resistance for impedance matching. Ground them when not used. |
| PMALERT# | No | Open drain and high dv/dt pin during transitions. Route it in the middle of I2DATA and I2LK. Also see above. Leave it open or tie it ground when not used. |
| BUF_COMP | Yes | Buffer output of internal Comp Signal. |
| TM_EN_OTP | Yes | Place NTC in close proximity to the output inductor of Channel 1 and to the output rail, not close to MOSFET side (see Figure 24); the return trace should be 25 mils away from other traces. Place 1kΩ pull-up and decoupling capacitor (typically 0.1µF) in close proximity to the controller. The pull-up resistor should be exactly tied to the same point as $V_{CC}$ pin, not through an RC filter. If not used, connect this pin to 1M Ω/2M Ω resistor divider, or tie to $V_{CC}$ . |
| AUTO | Yes | Program AUTO phase shedding threshold a resistor from this pin to GND. AUTO phase shedding is disabled when this pin tied to GND. |
| RSET | Yes | Place the R in close proximity to the controller. DON'T use decoupling capacitor on this pin. |

**TABLE 19. PIN DESIGN AND/OR LAYOUT CONSIDERATION (Continued)**

| PIN NAME | NOISE SENSITIVE | DESCRIPTION |
|---|---|---|
| $V_{CC}$ | Yes | Place a high quality ceramic capacitor (~ 1µF) in close proximity to the controller. |
| PWM1-6 | NO | Avoid the respective PWM routing across or under other phase's power trains/planes and current sensing network. Don't make them across or under external components of the controller. Keep them at least 20mils away from any other traces. |
| ISEN[6:1]+ | Yes | Connect to the output rail side of the respective channel's output inductor or resistor pin. Decoupling is optional and might be required for long sense traces and a poor layout. |
| ISEN[6:1]- | Yes | Connect to the phase node side of the respective channel's output inductor or resistor pin with L/DCR or ESL/$R_{SEN}$ matching network in close proximity to the ISEN± pins of VR. Differentially routing back to the controller by paring with respective ISEN+; at least 20 mils spacing between pairs and away from other traces. Each pair should not cross or go under the other channel's switching nodes [PHASE, UGATE, LGATE] and power planes even though they are not in the same layer. |
| GND | Yes | This EPAD is the return of PWM output drivers and PMBus. Use 4 or more vias to directly connect the EPAD to the power ground plane. Avoid using only single via or 0Ω resistor connection to the power ground plane. Also connect pins 13, 14 and 15 to ground plane. |
| General Comments | | The layer next to the Top or Bottom layer is preferred to be ground players, while the signal layers can be sandwiched in the ground layers if possible. |

## Component Placement

Within the allotted implementation area, orient the switching components first. The switching components are the most critical because they carry large amounts of energy and tend to generate high levels of noise. Switching component placement should take into account power dissipation. Align the output inductors and MOSFETs such that space between the components is minimized while creating the PHASE plane. Place the Intersil MOSFET driver IC as close as possible to the MOSFETs they control to reduce the parasitic impedances due to trace length between critical driver input and output signals. If possible, duplicate the same placement of these components for each phase.

Next, place the input and output capacitors. Position the high frequency ceramic input capacitors next to each upper MOSFET drain. Place the bulk input capacitors as close to the upper MOSFET drains as dictated by the component size and dimensions. Long distances between input capacitors and MOSFET drains result in too much trace inductance and a reduction in capacitor performance. Locate the output capacitors between the inductors and the load, while keeping ceramic capacitors in close proximity to the microprocessor socket.

To improve the chance of first pass success, it is very important to take time to follow the above outlined design guidelines and Intersil generated layout check list, see more details in “Voltage Regulator (VR) Design Materials” on page 55. Proper planning for the layout is as important as designing the circuits. Running things in a hurry, you could end up spending weeks and months to debug a poorly-designed and improperly laid out board.

# Powering Up And Open-Loop Test

The ISL6398 features very easy debugging and powering up. For first-time powering up, an open-loop test can be done by applying sufficient voltage (current limiting to 0.25A) to $V_{CC}$, signal high to TM_EN_OTP (>1.05V) and EN_PWR_CFP (>0.9V and less than 3.5V) pins with the input voltage (VIN) disconnected.

1. Each PWM output should operate at maximum duty cycle and correct switching frequency.
2. Read data in DC and DD of PMBus to confirm its proper setting.
3. If 5V drivers are used and share the same rail as $V_{CC}$, the proper switching on UGATEs and LGATEs should be seen.
4. If 12V drivers are used and can be disconnected from VIN and sourced by an external 12V supply, the proper switching on UGATEs and LGATEs should be observed.
5. If the above is not properly operating, you should check soldering joint, resistor register setting, Power Train connection or damage, i.e, shorted gates, drain and source. Sometimes the gate might measure short due to residual gate charge. Therefore, a measured short gate with ohmmeter cannot validate if the MOSFET is damaged unless the Drain to Source is also measured short.
6. When re-work is needed for the L/DCR matching network, use an ohmmeter across the C to see if the correct R value is measured before powering the VR up; otherwise, the current imbalance due to improper re-work could damage the power trains.
7. After everything is checked, apply low input voltage (1-5V) with appropriate current limiting (~0.5A). All phases should be switching evenly when AUTO disabled.
8. Remove the pull-up from EN_PWR_CFP pin, using bench power supplies, power-up $V_{CC}$ with current limiting (typically ~ 0.25A if 5V drivers included) and slowly increase Input Voltage with current limiting. For typical application, $V_{CC}$ limited to 0.25A, VIN limited to 0.5A should be safe for powering up with no load. High core-loss inductors likely need to increase the input current limiting. All phases should be switching evenly.

# Voltage Regulator (VR) Design Materials

To support VR design and layout, Intersil also developed a set of worksheets and evaluation boards, as listed in Tables 20 and 21, respectively. The tolerance band calculation (TOB) worksheets for VR output regulation and IMON have been developed using the Root Sum Squared (RSS) method with 3 sigma distribution point of the related components and parameters. Note that the “Electrical Specifications” table beginning on page 10 specifies no less than 6 sigma distribution point, not suitable for RSS TOB calculation. Contact Intersil’s local office or field support for the latest available information.

**TABLE 20. AVAILABLE DESIGN ASSISTANCE MATERIALS**

| ITEM | DESCRIPTION |
|---|---|
| 0 | Design and Validation |
| 1 | Design Worksheet for Compensation and Component Selection |
| 2 | SMBus/PMBus/$I^2C$ Communication Tool with Software |
| 3 | Resistor Register Calculator |
| 4 | Layout Design Guidelines |
| 5 | Evaluation Board Schematics in OrCAD Format and Layout in Allegro Format |

NOTE: For worksheets, please contact Intersil Application support at www.intersil.com/design/.

**TABLE 21. AVAILABLE EVALUATION BOARDS**

| EVALUATION BOARDS | PACKAGE | TARGETED APPLICATIONS | SMBus/PMBus/$I^2C$ | PEAK EFFICIENCY | ICCMAX (A) |
|---|---|---|---|---|---|
| ISL6398EVAL1Z | 5x5 40Ld | 3-Phase POL with ISL99140, 6x6 DrMOS Digital Compensation with NVM | Yes | 93%, 1.2V@40A | 100A |
| ISL6398EVAL2Z | 5x5 40Ld | 6-Phase with ISL99140, 6x6 DrMOS Digital Compensation with NVM | Yes | 94%, 1.8V@50A | 215A |

# Revision History

The revision history provided is for informational purposes only and is believed to be accurate, but not warranted. Please go to web to make sure you have the latest revision.

| DATE | REVISION | CHANGE |
|---|---|---|
| August 13, 2015 | FN8575.1 | Updated “SMBus/PMBus/$I^2C$” section of Electrical Specification table on page 13.<br>-Added PMBus specs Signal Input Low Voltage, Signal Input High Voltage and Signal Output Low Voltage.<br>-Added min/max Time-out spec<br>-Changed the Time-out typical from “35” to “30”.<br>Updated the second sentence under “Soft-start” on page 25.<br>Updated Table 9 on page 33 by splitting PMBus (DC) and PMBus (DD) (now Table 10) into two different tables, also updated $R_{DW}$ value for 80h from “10” to “499”.<br>Updated third paragraph under “SMBus, PMBus and $I^2C$ Operation” on page 35.<br>Updated Figure 33 on page 35.<br>Updated Figure 35 on page 36.<br>Updated Figure 36 on page 37.<br>Updated DFh[8:0] description in Table 14 on page 41 and changed bit from “[7:0]” to “[8:0]”.<br>Updated POD to current revision. Changes from revision 1 to revision 2 are as follows:<br>Added tolerance ± values. |
| April 18, 2014 | FN8575.0 | Initial release |

# About Intersil

Intersil Corporation is a leading provider of innovative power management and precision analog solutions. The company's products address some of the largest markets within the industrial and infrastructure, mobile computing and high-end consumer markets.

For the most updated datasheet, application notes, related documentation and related parts, please see the respective product information page found at www.intersil.com.

You may report errors or suggestions for improving this datasheet by visiting www.intersil.com/ask.

Reliability reports are also available from our website at www.intersil.com/support

© Copyright Intersil Americas LLC 2014-2015. All Rights Reserved.
All trademarks and registered trademarks are the property of their respective owners.

For additional products, see www.intersil.com/en/products.html

Intersil products are manufactured, assembled and tested utilizing ISO9001 quality systems as noted in the quality certifications found at www.intersil.com/en/support/qualandreliability.html

*Intersil products are sold by description only. Intersil may modify the circuit design and/or specifications of products at any time without notice, provided that such modification does not, in Intersil's sole judgment, affect the form, fit or function of the product. Accordingly, the reader is cautioned to verify that datasheets are current before placing orders. Information furnished by Intersil is believed to be accurate and reliable. However, no responsibility is assumed by Intersil or its subsidiaries for its use; nor for any infringements of patents or other rights of third parties which may result from its use. No license is granted by implication or otherwise under any patent or patent rights of Intersil or its subsidiaries.*

For information regarding Intersil Corporation and its products, see www.intersil.com

# Package Outline Drawing

## L40.5x5

**40 LEAD THIN QUAD FLAT NO-LEAD PLASTIC PACKAGE**

**Rev 2, 7/14**

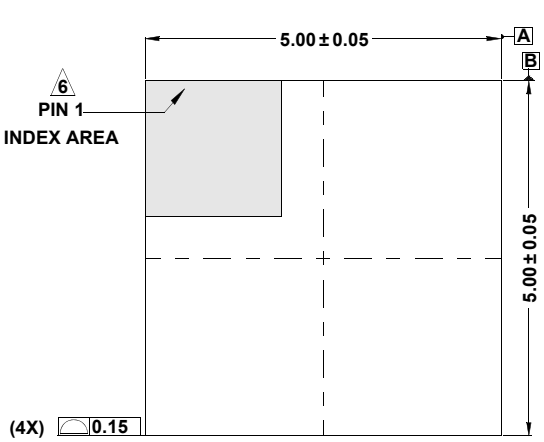


TOP VIEW

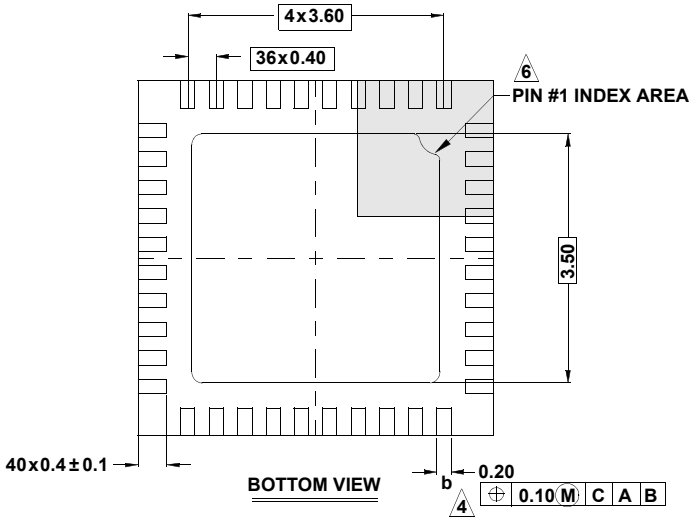


BOTTOM VIEW

PACKAGE OUTLINE

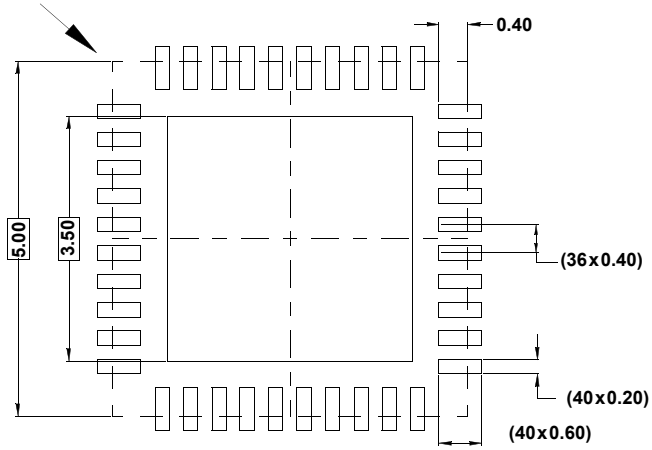


TYPICAL RECOMMENDED LAND PATTERN

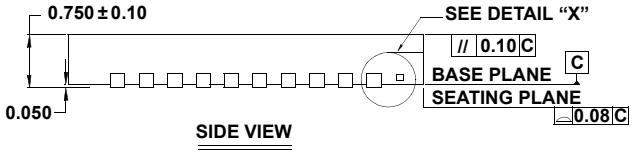


SIDE VIEW

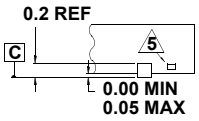


DETAIL "X"

**NOTES:**

1. Dimensions are in millimeters.
   Dimensions in ( ) for Reference Only.
2. Dimensioning and tolerancing conform to AMSE Y14.5m-1994.
3. Unless otherwise specified, tolerance: Decimal ± 0.05
4. Dimension b applies to the metallized terminal and is measured between 0.15mm and 0.27mm from the terminal tip.
5. Tiebar shown (if present) is a non-functional feature.
6. The configuration of the pin #1 identifier is optional, but must be located within the zone indicated. The pin #1 identifier may be either a mold or mark feature.
7. JEDEC reference drawing: MO-220WHHE-1