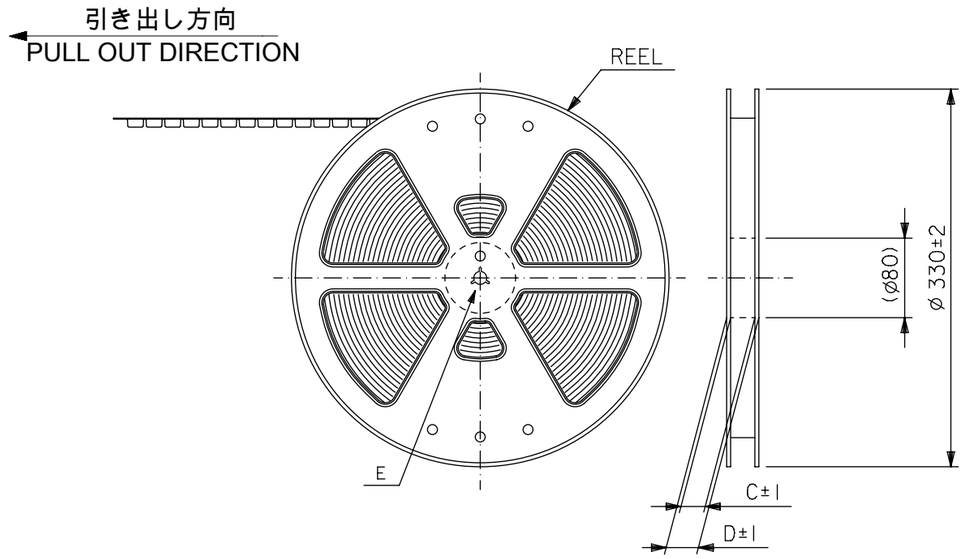

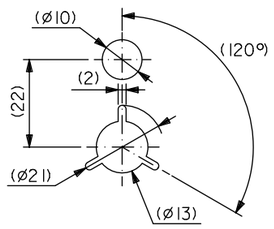

DETAIL E

注記 NOTES

1. 梱包数量：1000個/リール　NUMBER OF CONNECTORS : 1000PCS/REEL

2. リードテープ長さ　LEAD TAPE LENGTH

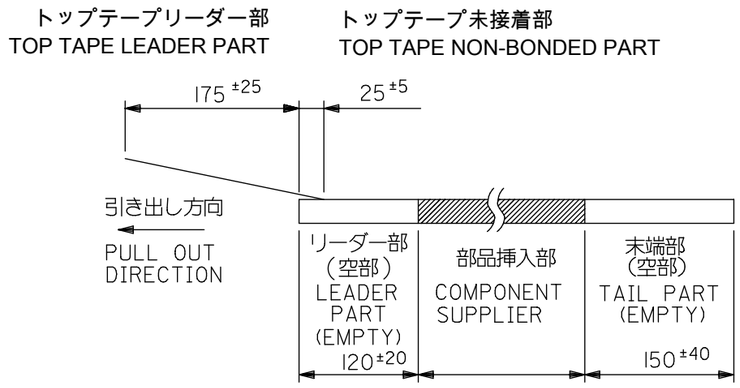

3. トップテープの剥離強度についてはIEC60286-3に準拠。
TOP TAPE PEEL FORCE IS DEFINED BY IEC60286-3.

4. 材料　キャリアテープ：ポリプロピレン (PP)
トップテープ：PET, PE, PEF
リール：ポリスチレン (PS) < リサイクル材を含む >
MATERIAL
CARRIER TAPE : POLYPROPYLENE
TOP TAPE : PET, PE, PEF
REEL : POLYSTYRENE (PS) < CONTAINED RECYCLE MATERIAL >

5. 本製品は53307-**91の鉛フリー品である。
THIS PRODUCT IS LEAD FREE OF 53307-**91.

THIS DRAWING CONTAINS INFORMATION THAT IS PROPRIETARY TO MOLEX ELECTRONIC TECHNOLOGIES, LLC AND SHOULD NOT BE USED WITHOUT WRITTEN PERMISSION

DIMENSION UNITS	SCALE
mm	NTS

GENERAL TOLERANCES (UNLESS SPECIFIED)

ANGULAR TOL	±	30 °
4 PLACES	±	0.2
3 PLACES	±	0.25
2 PLACES	±	0.3
1 PLACE	±	
0 PLACES	±	

DRAFT WHERE APPLICABLE MUST REMAIN WITHIN DIMENSIONS

CURRENT REV DESC: REMOVED OBSOLETED PART NUMBER AS PER PCN#516685

EC NO: 830087
DRWN: PONNAM 2025/07/25
CHK'D: GGA 2025/08/05
APPR: GGA 2025/08/05

INITIAL REVISION:
DRWN: HSHIMABUKURO 2004/03/03
APPR: MSASAO 2004/03/05

molex

0.8 MM PITCH B-TO-B CONN.
PLUG (WITHOUT BOSS) EMBOSS TAPE PACKAGE

PRODUCT CUSTOMER DRAWING

DOCUMENT NUMBER	DOC TYPE	DOC PART	REVISION
SD-53307-014	PSD	001	B1

THIRD ANGLE PROJECTION	DRAWING	SERIES	MATERIAL NUMBER	CUSTOMER	SHEET NUMBER
	A3-SIZE	53307	SEE TABLE	GENERAL MARKET	1 OF 3

DOCUMENT STATUS	P1	RELEASE DATE	2025/08/05 13:01:48

FORMAT: master-tb-prod-A3
REVISION: J1
DATE: 2021/05/01

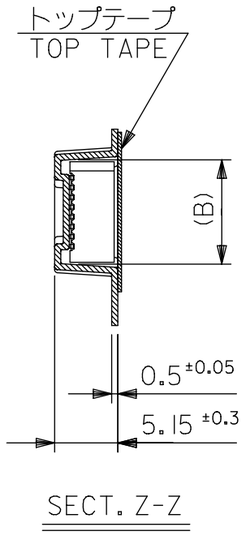

SECT. Z-Z

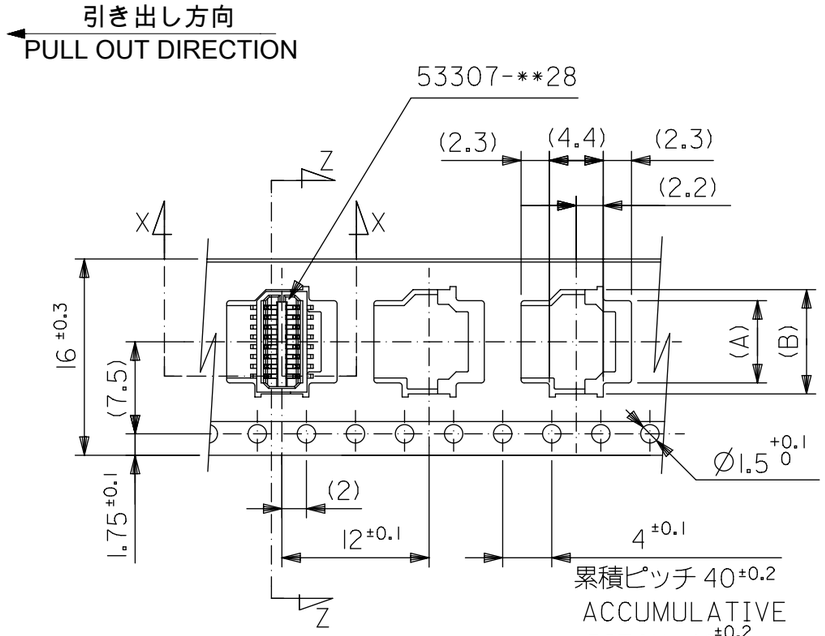

１６mm幅キャリアテープ

16mm WIDTH CARRIER TAPE

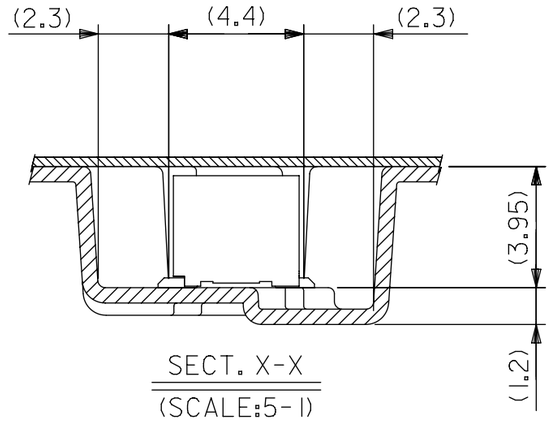

SECT. X-X
(SCALE:5-1)

キャリアテープ幅 CARRIER TAPE WIDTH	D	C	(B)	(A)	EMBOSSED TAPE PACKAGE ORDER NO	極数 CIRCUITS
16	21.4	17.4	9.3	7.5	53307-1871	18
			8.5	6.7	53307-1671	16
			7.7	5.9	53307-1471	14
			6.9	5.1	53307-1271	12
			6.1	4.3	53307-1071	10

THIS DRAWING CONTAINS INFORMATION THAT IS PROPRIETARY TO MOLEX ELECTRONIC TECHNOLOGIES, LLC AND SHOULD NOT BE USED WITHOUT WRITTEN PERMISSION

DIMENSION UNITS: mm
SCALE: NTS

GENERAL TOLERANCES (UNLESS SPECIFIED)

ANGULAR TOL	±	0 °
4 PLACES	±	0.2
3 PLACES	±	0.25
2 PLACES	±	0.3
1 PLACE	±	
0 PLACES	±	

DRAFT WHERE APPLICABLE MUST REMAIN WITHIN DIMENSIONS

CURRENT REV DESC: REMOVED OBSOLETED PART NUMBER AS PER PCN#516685

EC NO: 830087
DRWN: PONNAM 2025/07/25
CHK'D: GGA 2025/08/05
APPR: GGA 2025/08/05

INITIAL REVISION:
DRWN: HSHIMABUKURO 2004/03/03
APPR: MSASAO 2004/03/05

molex

0.8 MM PITCH B-TO-B CONN.
PLUG (WITHOUT BOSS) EMBOSS TAPE PACKAGE

PRODUCT CUSTOMER DRAWING

DOCUMENT NUMBER	DOC TYPE	DOC PART	REVISION
SD-53307-014	PSD	001	B1

THIRD ANGLE PROJECTION | DRAWING: A3-SIZE | SERIES: 53307

MATERIAL NUMBER	CUSTOMER	SHEET NUMBER
SEE TABLE	GENERAL MARKET	2 OF 3

DOCUMENT STATUS	P1	RELEASE DATE	2025/08/05 13:01:48

FORMAT: master-lb-prod-A3
REVISION: J1
DATE: 2021/05/01

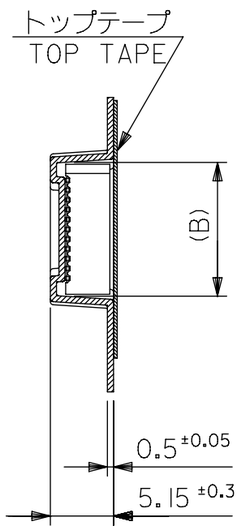

SECT. Y-Y

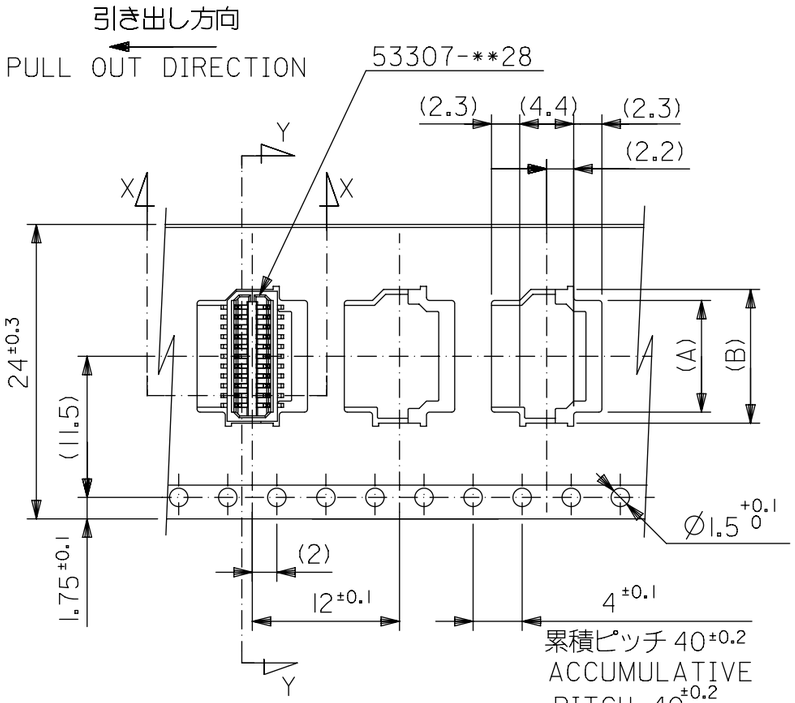

24mm幅キャリアテープ

24mm WIDTH CARRIER TAPE

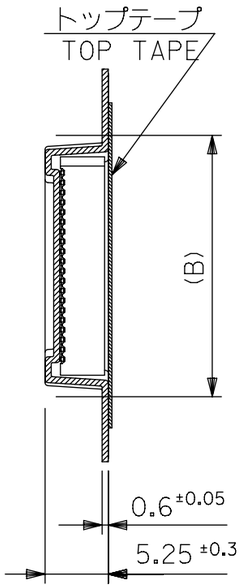

SECT. Z-Z

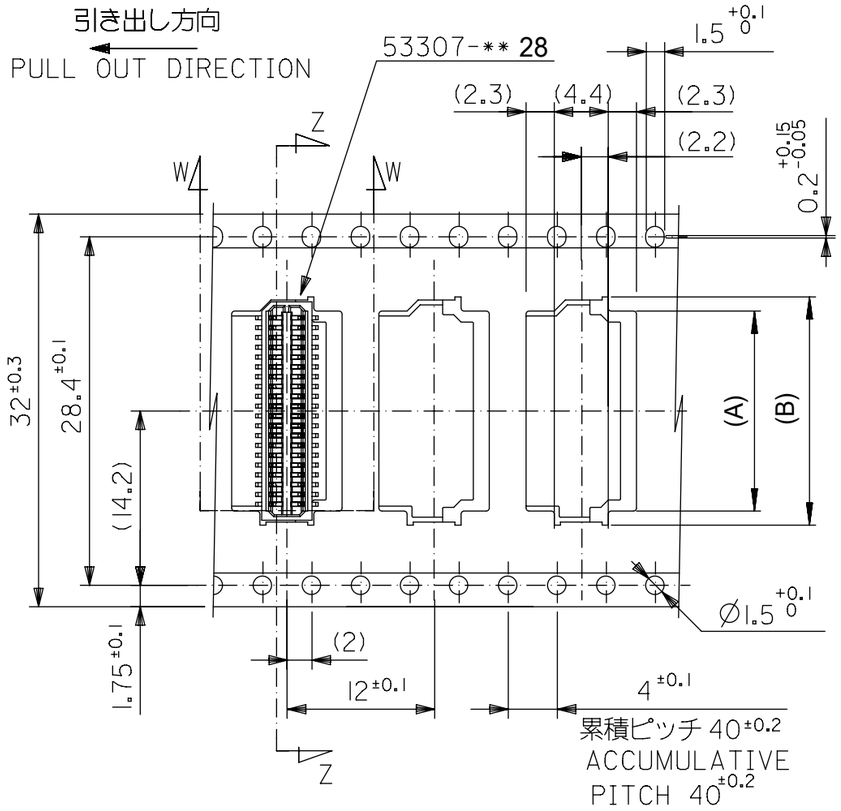

32mm幅キャリアテープ

32mm WIDTH CARRIER TAPE

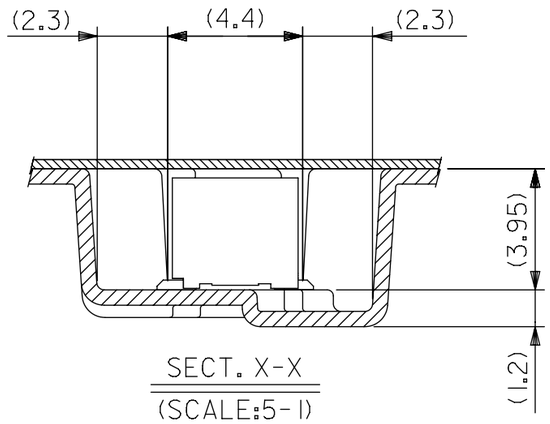

SECT. X-X

(SCALE:5-1)

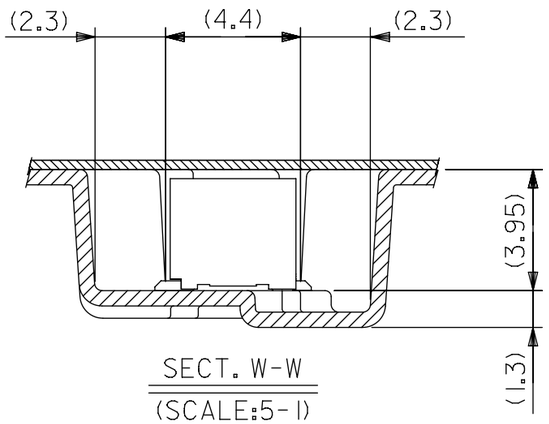

SECT. W-W

(SCALE:5-1)

キャリアテープ幅 CARRIER TAPE WIDTH	D	C	(B)	(A)	EMBOSSED TAPE PACKAGE ORDER NO	極数 CIRCUITS
32	37.4	33.4	18.1	16.3	53307-4071	40
24	29.4	25.4	16.5	14.7	53307-3671	36
			14.1	12.3	53307-3071	30
			13.3	11.5	53307-2871	28
			12.5	10.7	53307-2671	26
			11.7	9.9	53307-2471	24
			10.9	9.1	53307-2271	22
			10.1	8.3	53307-2071	20

THIS DRAWING CONTAINS INFORMATION THAT IS PROPRIETARY TO MOLEX ELECTRONIC TECHNOLOGIES, LLC AND SHOULD NOT BE USED WITHOUT WRITTEN PERMISSION

DIMENSION UNITS	SCALE
mm	NTS

GENERAL TOLERANCES (UNLESS SPECIFIED)

ANGULAR TOL	±	1.0 °
4 PLACES	±	0.2
3 PLACES	±	0.25
2 PLACES	±	0.3
1 PLACE	±	
0 PLACES	±	

DRAFT WHERE APPLICABLE MUST REMAIN WITHIN DIMENSIONS

CURRENT REV DESC: REMOVED OBSOLETED PART NUMBER AS PER PCN#516685

EC NO: 830087

DRWN:	PONNAM	2025/07/25
CHK'D:	GGA	2025/08/05
APPR:	GGA	2025/08/05

INITIAL REVISION:

DRWN:	HSHIMABUKURO	2004/03/03
APPR:	MSASAO	2004/03/05

molex

0.8 MM PITCH B-TO-B CONN.
PLUG (WITHOUT BOSS) EMBOSS TAPE PACKAGE

PRODUCT CUSTOMER DRAWING

DOCUMENT NUMBER	DOC TYPE	DOC PART	REVISION
SD-53307-014	PSD	001	B1

THIRD ANGLE PROJECTION	DRAWING	SERIES
	A3-SIZE	53307

MATERIAL NUMBER	CUSTOMER	SHEET NUMBER
SEE TABLE	GENERAL MARKET	3 OF 3

DOCUMENT STATUS	P1	RELEASE DATE	2025/08/05 13:01:48

FORMAT: master-tb-prod-A3
REVISION: J1
DATE: 2021/05/01

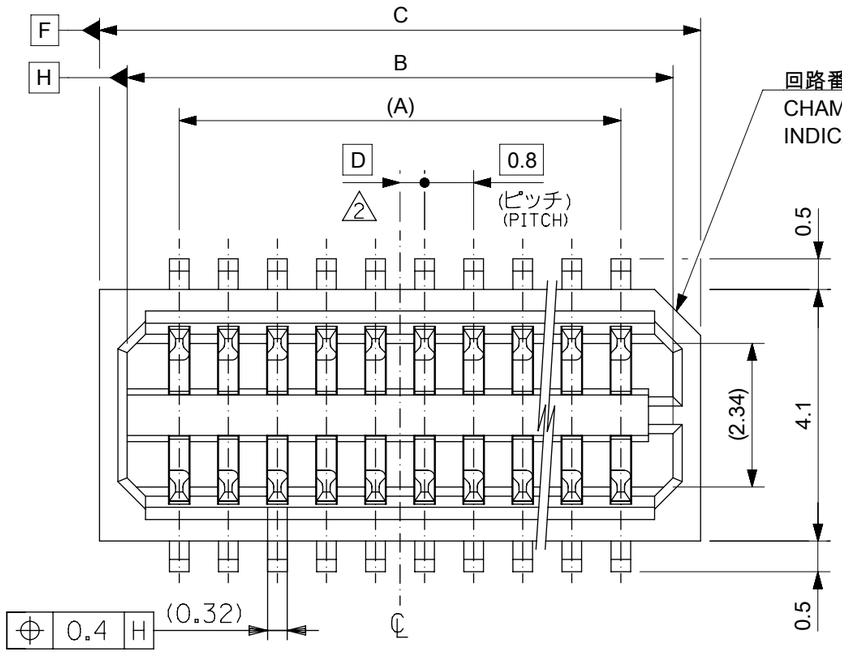

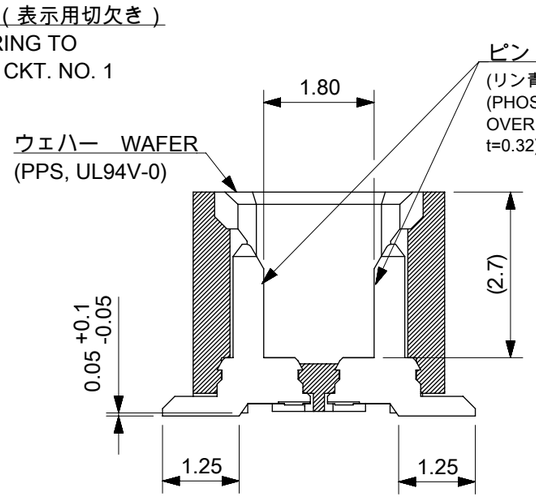

SECT. G-G

注記 NOTES

1 嵌合相手：52465シリーズ
MATE WITH : 52465 SERIES

△2 ウェハーの℄から隣接するピンの℄迄の位置を示す。
SHOW POSITION FROM ℄OF WAFER TO ℄OF ADJACENT PINS.

3 本製品は 53307-**27 の鉛フリー品である。
THIS PRODUCT IS LEAD FREE OF 53307-**27.

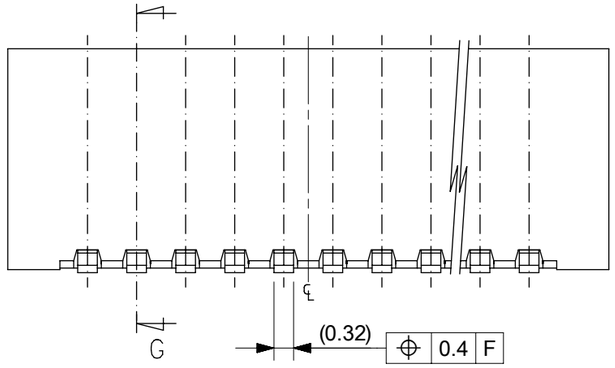

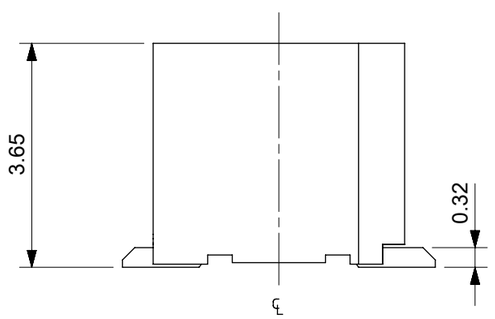

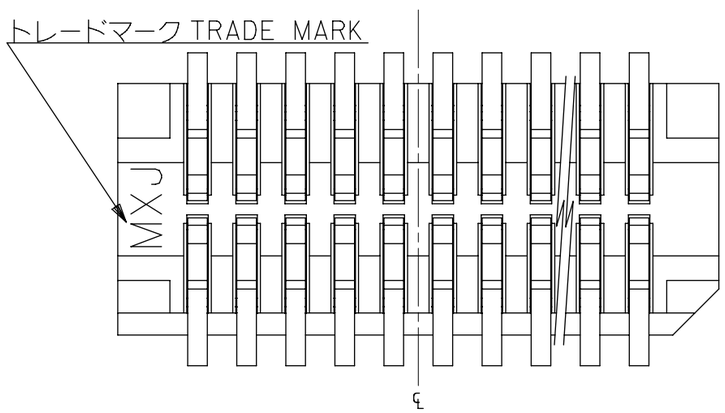

D	C	B	A	EMBOSSED TAPE PACKAGE	極数
				ORDER NO	CIRCUITS
0.4	17.8	16.9	15.2	53307-4071	40
0.4	16.2	15.3	13.6	53307-3671	36
0.8	13.8	12.9	11.2	53307-3071	30
0.4	13.0	12.1	10.4	53307-2871	28
0.8	12.2	11.3	9.6	53307-2671	26
0.4	11.4	10.5	8.8	53307-2471	24
0.8	10.6	9.7	8.0	53307-2271	22
0.4	9.8	8.9	7.2	53307-2071	20
0.8	9.0	8.1	6.4	53307-1871	18
0.4	8.2	7.3	5.6	53307-1671	16
0.8	7.4	6.5	4.8	53307-1471	14
0.4	6.6	5.7	4.0	53307-1271	12
0.8	5.8	4.9	3.2	53307-1071	10

THIS DRAWING CONTAINS INFORMATION THAT IS PROPRIETARY TO MOLEX ELECTRONIC TECHNOLOGIES, LLC AND SHOULD NOT BE USED WITHOUT WRITTEN PERMISSION

GENERAL TOLERANCES (UNLESS SPECIFIED)	
10^{UNDER}	±0.2
$10^{OVER}30^{UNDER}$	±0.25
30^{OVER}	±0.3
ANGULAR	±3°

DRAFT WHERE APPLICABLE MUST REMAIN WITHIN DIMENSIONS

GENERAL TOLERANCES (UNLESS SPECIFIED)	
ANGULAR TOL	± 3.0 °
4 PLACES	± 0.2
3 PLACES	± 0.25
2 PLACES	± 0.3
1 PLACE	±
0 PLACES	±

DRAFT WHERE APPLICABLE MUST REMAIN WITHIN DIMENSIONS

DIMENSION UNITS: mm | SCALE: NTS

CURRENT REV DESC: REMOVED OBSOLETED PART NUMBER AS PER PCN#516685

EC NO: 830087
DRWN: PONNAM 2025/07/25
CHK'D: GGA 2025/08/05
APPR: GGA 2025/08/05

INITIAL REVISION:
DRWN: HSHIMABUKURO 2004/03/03
APPR: MSASAO 2004/03/05

molex

0.8 MM PITCH B-TO-B CONN.
PLUG (WITHOUT BOSS)

PRODUCT CUSTOMER DRAWING

DOCUMENT NUMBER	DOC TYPE	DOC PART	REVISION
SD-53307-015	PSD	001	E1

THIRD ANGLE PROJECTION | DRAWING: A3-SIZE | SERIES: 53307

MATERIAL NUMBER	CUSTOMER	SHEET NUMBER
SEE TABLE	GENERAL MARKET	1 OF 2

DOCUMENT STATUS	P1	RELEASE DATE	2025/08/05 13:01:49

FORMAT: master-ib-prod-A3
REVISION: J1
DATE: 2021/05/01

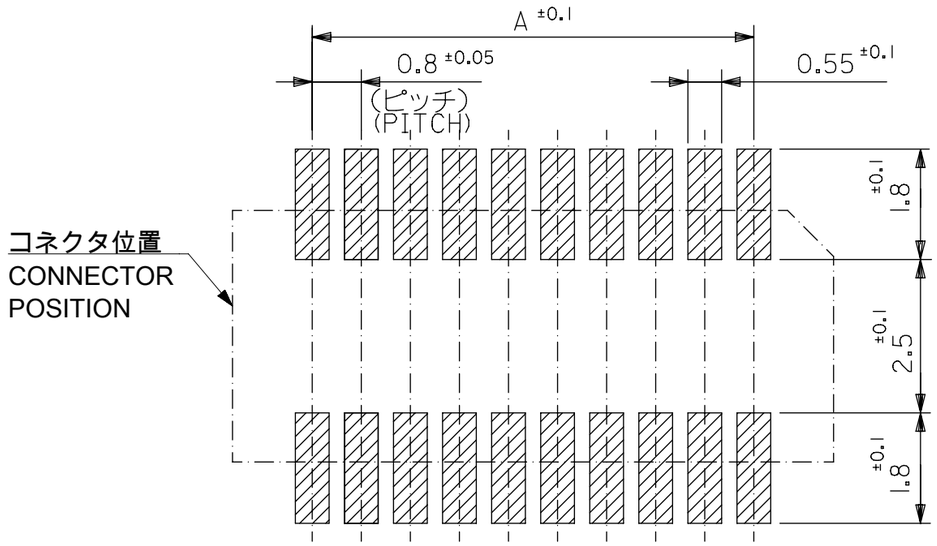

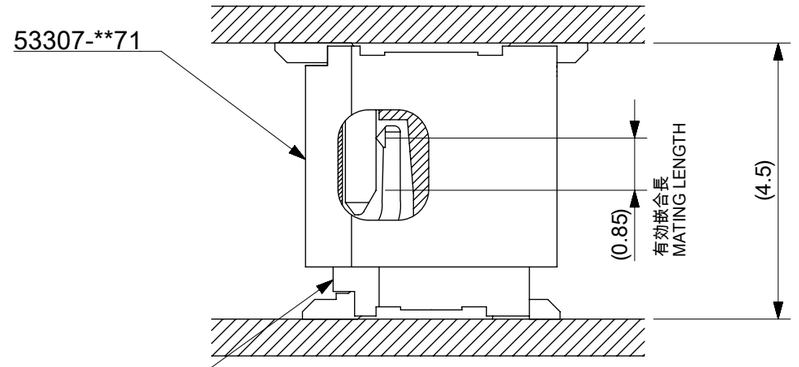

参考基板レイアウト (マウント面)
P.C.B PATTERN LAYOUT (REF.) (MOUNT AREA)

嵌合状態図 (参考)
MATED DRAWING (REF.)

THIS DRAWING CONTAINS INFORMATION THAT IS PROPRIETARY TO MOLEX ELECTRONIC TECHNOLOGIES, LLC AND SHOULD NOT BE USED WITHOUT WRITTEN PERMISSION

GENERAL TOLERANCES (UNLESS SPECIFIED)	
10 UNDER	±0.2
10 OVER 30 UNDER	±0.25
30 OVER	±0.3
ANGULAR	±3°

DRAFT WHERE APPLICABLE MUST REMAIN WITHIN DIMENSIONS

DIMENSION UNITS	SCALE
mm	NTS

GENERAL TOLERANCES (UNLESS SPECIFIED)		
ANGULAR TOL	±	3.0 °
4 PLACES	±	0.2
3 PLACES	±	0.25
2 PLACES	±	0.3
1 PLACE	±	
0 PLACES	±	

DRAFT WHERE APPLICABLE MUST REMAIN WITHIN DIMENSIONS

CURRENT REV DESC: REMOVED OBSOLETED PART NUMBER AS PER PCN#516685

EC NO: 830087
DRWN: PONNAM 2025/07/25
CHK'D: GGA 2025/08/05
APPR: GGA 2025/08/05

INITIAL REVISION:
DRWN: HSHIMABUKURO 2004/03/03
APPR: MSASAO 2004/03/05

THIRD ANGLE PROJECTION | DRAWING: A3-SIZE | SERIES: 53307

molex

0.8 MM PITCH B-TO-B CONN.
PLUG (WITHOUT BOSS)

PRODUCT CUSTOMER DRAWING

DOCUMENT NUMBER	DOC TYPE	DOC PART	REVISION
SD-53307-015	PSD	001	E1

MATERIAL NUMBER	CUSTOMER	SHEET NUMBER
SEE TABLE	GENERAL MARKET	2 OF 2

DOCUMENT STATUS	P1	RELEASE DATE	2025/08/05 13:01:49

FORMAT: master-tb-prod-A3
REVISION: J1
DATE: 2021/05/01