Revision Record					
Control No.	**Revision**	**Description**	**Date**	**Drawn**	**Approved**
	A0	Initial release TMAX-0530-4R7-M	2018/10/23	Heter	Roger
	A1	Add TMAX-0530-100-M	2018/10/29	Heter	Roger
	A2	Add TMAX-0530-1R0-M	2018/11/14	Heter	Roger
	A3	Add TMAX-0530-R33-M TMAX-0530-R68-M TMAX-0530-2R2-M TMAX-0530-3R3-M TMAX-0530-6R8-M	2018/11/21	Heter	Roger

TMAX-0530-XXX-M Molded Power Inductor

Features

- Low profile
- Low core loss and low DCR
- High rated current
- High performance (Isat) realized by metal dust core
- RoHS compliant and Halogen Free
- Low EMI and low noise

Applications

- Voltage Regulator Module
- DC/DC converters
- Thin type on-board power supply module for exchanger
- Graphics cards
- Laptops and PCs
- SSD modules

Product Description

TMAX - 0530 - 1R0 - M

Tolerance	M=±20%
Inductance	1R0=1.0μH
Dimensions	
Product Series	

Dimensions in millimeters

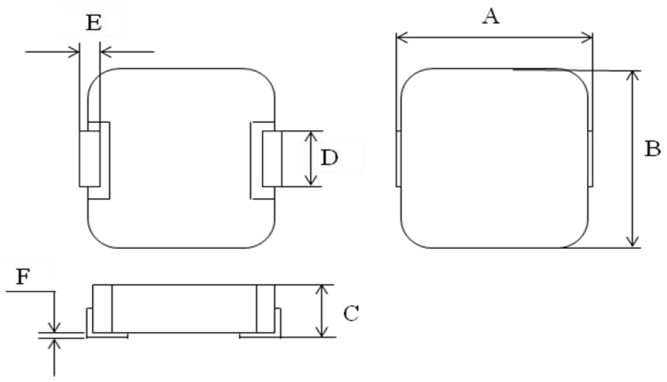

A	**5.4±0.30**
B	**5.2±0.20**
C	**3.0 Max.**
D	**2.1±0.20**
E	**1.2±0.20**
F	**0~0.15**

Recommend Land Pattern Dimensions in millimeters

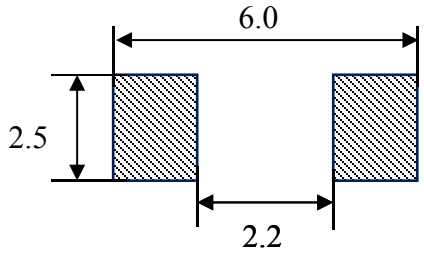

Marking

- The inductor is marked with a 3-digit code by ink.
- For example: 1R0→ 1.0μH, R10→ 0.1μH.

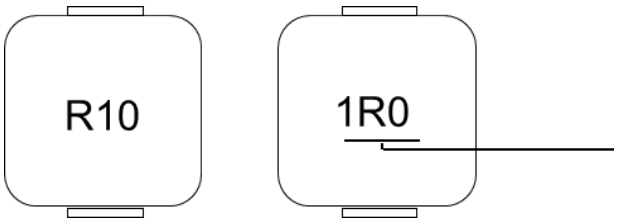

Inductance:
1.0μH

Specifications

Part No.	Inductance		DCR (mΩ)		Saturation Current	Heat Rating Current
					Isat (Amps.)	Idc (Amps.)
	L_0(μH)	Tolerance	Typ.	Max.	Typ.	Typ.
TMAX-0530-R33-M	0.33	±20%	4.55	5.15	19	14
TMAX-0530-R68-M	0.68	±20%	9.0	10.0	13	11
TMAX-0530-1R0-M	1.0	±20%	12	13.5	11	9.0
TMAX-0530-2R2-M	2.2	±20%	25	29	9.0	6.5
TMAX-0530-3R3-M	3.3	±20%	33	38	8.0	5.5
TMAX-0530-4R7-M	4.7	±20%	51	60	6.0	4.5
TMAX-0530-6R8-M	6.8	±20%	80	90	4.5	3.5
TMAX-0530-100-M	10.0	±20%	110	125	4.0	3.0

Notes:

1. All test data is referenced to 23±3 °C and 45%RH to 70%RH ambient.
2. Test Instruments：3260B LCR Meter, 3265B Bias Current Source（100kHz,1V），EUCOL-U2516B DC Low ohm meter.
3. Operating temperature range - 55 °C to + 125 °C（ambient + self-temp. rise）.
4. Isat: DC current (A) that will cause L_0 to drop approximately 30 %.
5. Idc: DC current (A) that will cause an approximate ΔT of 40 °C.
6. The part temperature (ambient + temp. rise) should not exceed 125 °C under worst case operating conditions. Circuit design, component placement, PWB trace size and thickness, airflow and other cooling provisions all affect the part temperature. Part temperature should be verified in the end application.
7. The rated current as listed is either the saturation current or the heat rating current depending on which value is lower.

Inductance and Temperature Rise vs. DC Current

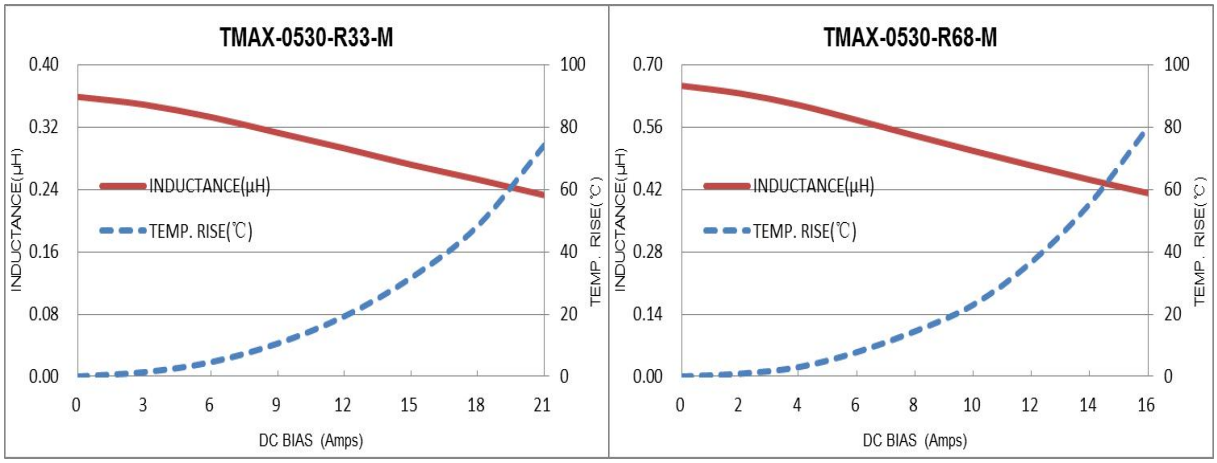

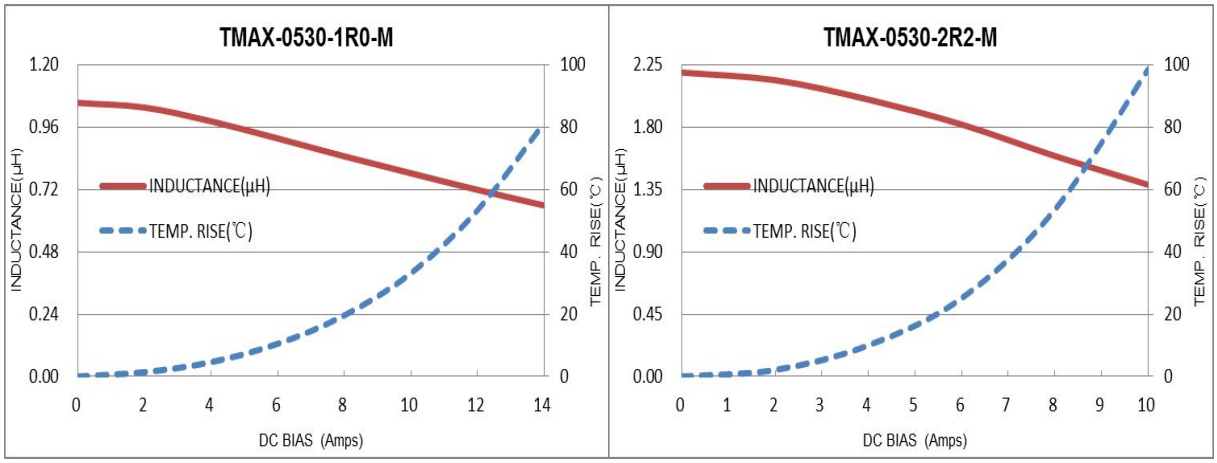

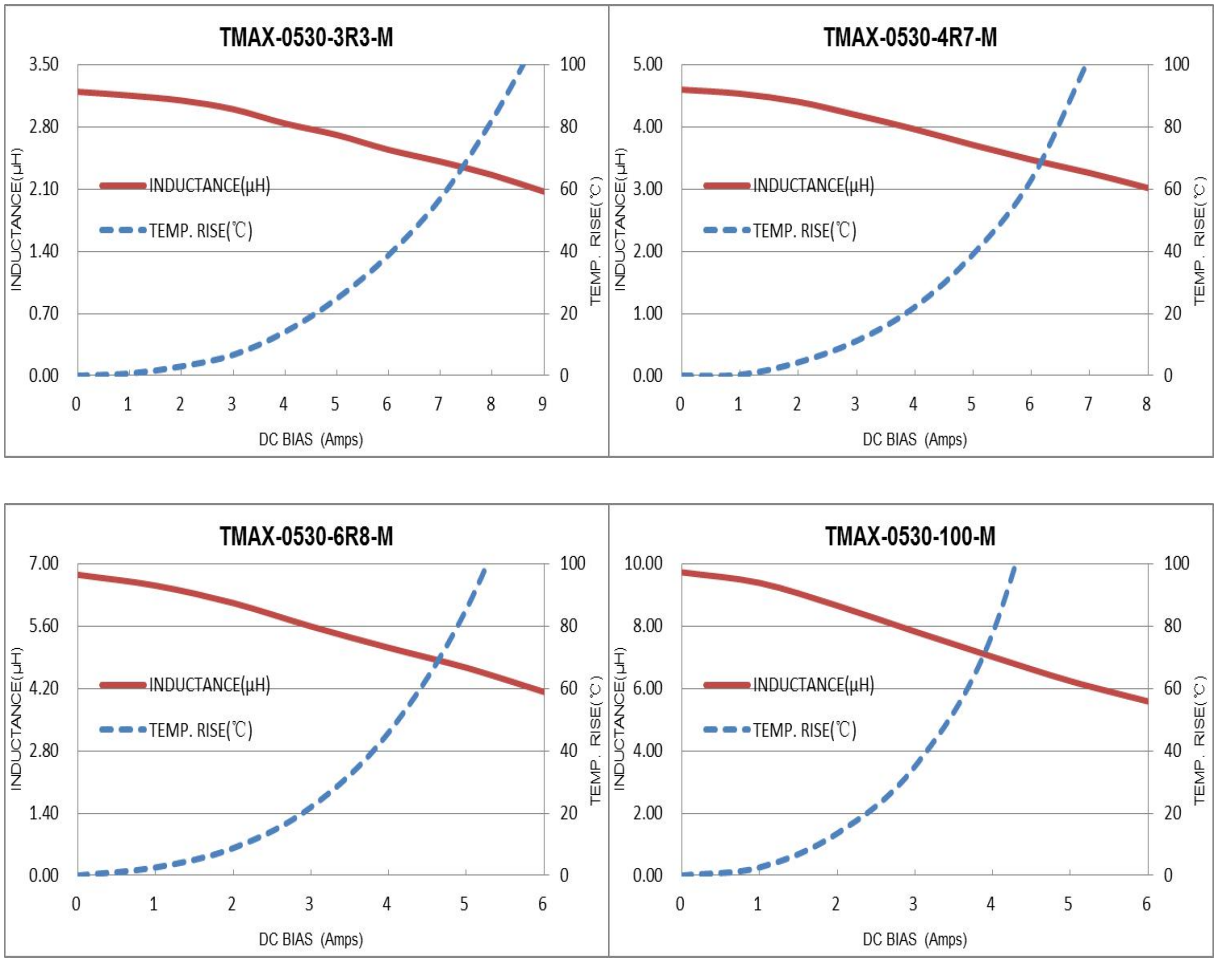
TMAX-0530-3R3-M
INDUCTANCE(μH)
TEMP. RISE(℃)
DC BIAS (Amps)
TMAX-0530-4R7-M
INDUCTANCE(μH)
TEMP. RISE(℃)
DC BIAS (Amps)
TMAX-0530-6R8-M
INDUCTANCE(μH)
TEMP. RISE(℃)
DC BIAS (Amps)
TMAX-0530-100-M
INDUCTANCE(μH)
TEMP. RISE(℃)
DC BIAS (Amps)

Reliability:

Item	Test Method	Specification and Requirement
Solderability	Solder heat proof : 1.Preheating: 160 ± 10°C for 90 seconds 2.Retention time: 245 ± 5℃ for 2 ± 0.5 seconds	The surface of terminal immersed shall be minimum of 95% covered with a new coating of solder.
Vibration	1.Vibration frequency: (10Hz to 55Hz to10Hz) in 60 seconds as a period 2.Vibration time: period cycled for 2 hours in each of 3 mutual perpendicular directions 3.Amplitude: 1.5mm max.	$\Delta L/L_0 \leq \pm 5\%$ No mechanical damage such as break.
Shock	1.Peak value: 100 G 2.Duration of pulse: 11ms 3.3 times in each positive and negative direction of 3 mutual perpendicular directions	

Reliability:

Item	Test Method	Specification and Requirement
Thermal Shock	1.Repeat 100 cycle as follow: (-55 ± 2°C,30 ± 3minutes) →(Room temperature, 5 minutes)→(+125 ± 2°C,30 ± 3minutes)→ (Room temperature, 5 minutes) 2.Recovery: 48 + 4 / - 0 hours of recovery under the standard condition after the test	$\Delta L/L_0 \leq \pm 5\%$ No distinct damage in appearance.
High Temperature Resistance	1.Environment Temperature : 85 ± 2°C 2.Applied Current: Rated current 3.Duration : 1,000 + 4 / - 0 hours	
Humidity Resistance	1.Environment Temperature: 60 ± 2°C 2.Relative Humidity: 90~95% 3.Duration: 1,000 + 4 / - 0 hours	
Low Temperature Store	1.Store temperature: -55 ± 2°C for total 1,000 + 4 / - 0 hours	
High Temperature Store	1.Store temperature: +125 ± 2°C for total 1,000 + 4 / - 0 hours	

Packaging Dimensions in millimeters

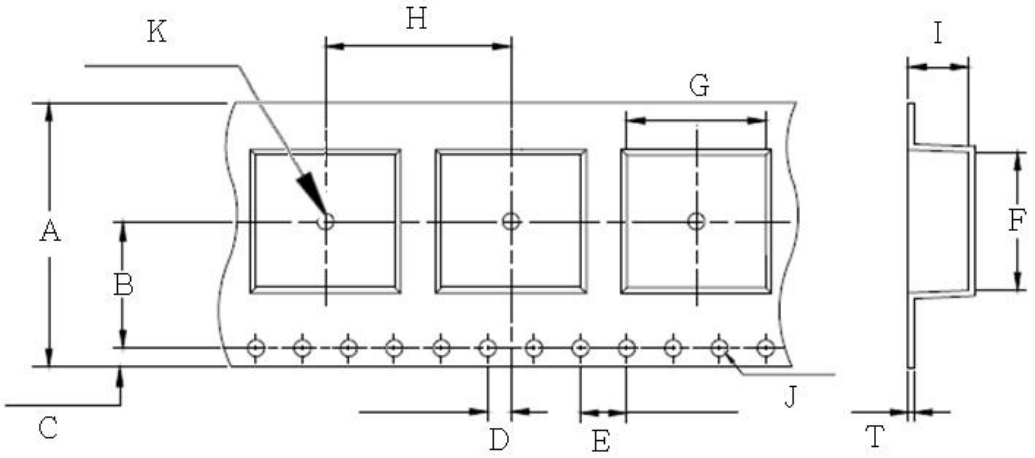

G	F	I	T	H	A
5.4 ± 0.1	5.8± 0.1	3.5 ± 0.15	0.35 ± 0.05	8.0 ± 0.1	12 ± 0.2
J	K	D	E	B	C
φ1.5± 0.1	φ1.5± 0.1	2.0 ± 0.1	4.0 ± 0.1	5.5 ± 0.1	1.75± 0.1

Reel Dimensions in millimeters

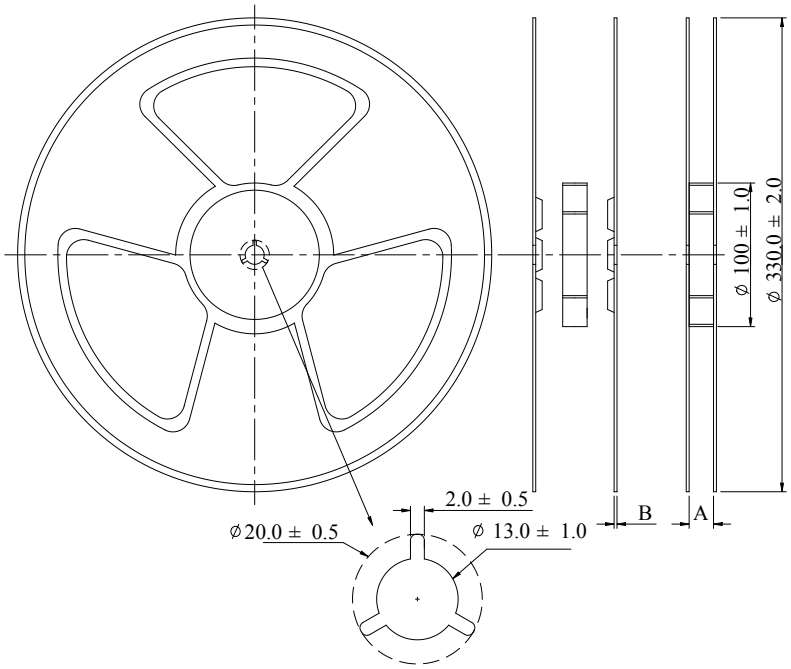

A	B	Color
12.5 ± 0.2	2.0 ± 0.2	Blue

Peeling of top cover tape

- The peeling speed shall be about 300 mm/minute.
- The peeling force shall be between 0.1 to 0.7 N.

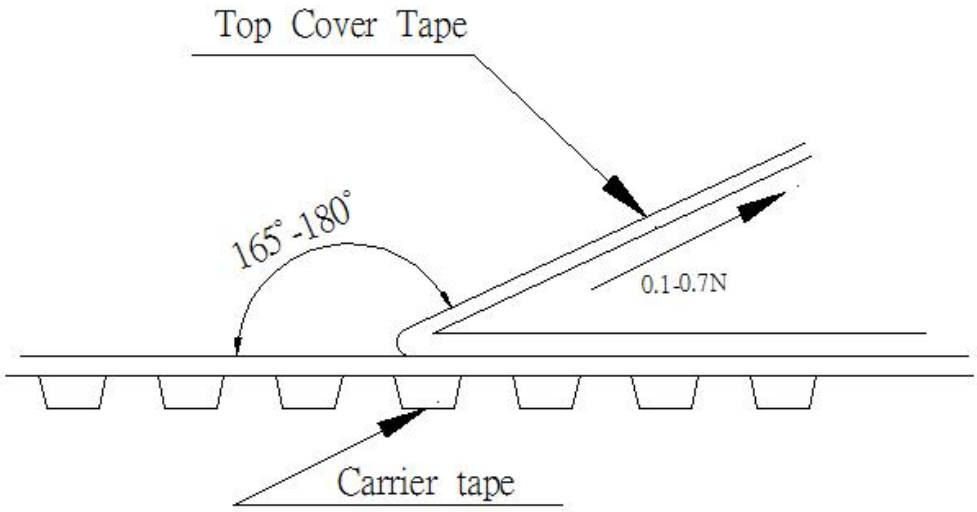

Reflow Profile

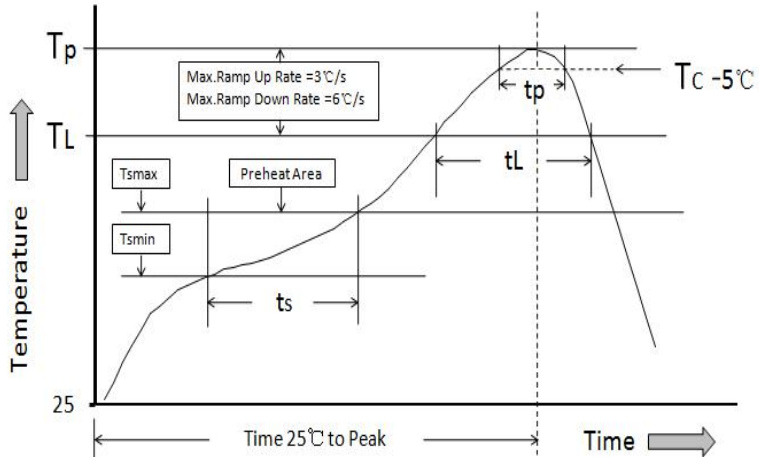

Table1-StandardSnPb Solder(Tc)

Package Thickness	Volume mm^3 <350	Volume mm^3 ≧350
<2.5mm	235℃	220℃
≧2.5mm	220℃	220℃

Table2-Lead(Pb)Free Solder(Tc)

Package Thickness	Volume mm^3 <350	Volume mm^3 350-2000	Volume mm^3 >2000
<1.6mm	260℃	260℃	260℃
1.6-2.5mm	260℃	250℃	245℃
>2.5mm	250℃	245℃	245℃

Reference JDEC J-STD-020(latest revision)

Profile Feature		Standard SnPb solder	Lead(Pb) Free Solder
Preheat and Soak	●Temperature min.(Tsmin)	100℃	150℃
	●Temperature max.(Tsmax)	150℃	200℃
	●Time(ts):Tsmin to Tsmax	60-120 Seconds	60-120 Seconds
Average ramp up rate TL to Tp		3℃/Second Max.	3℃/Second Max.
Liquidous temperature(TL) Time at liquidous (tL)		183℃ 60-150 Seconds	183℃ 60-150 Seconds
Peak package body temperature(Tp)*		Table 1	Table 2
Time (tp)**within 5 ℃ of the specified classification temperature(Tc)		20seconds**	30seconds**
Average ramp-down rate Tp to TL		6℃/Second Max.	6℃/Second Max.
Time 25℃ to Peak Temperature		6 Minutes Max.	8 Minutes Max.

*Tolerance for peak profile temperature (Tp) is defined as a supplier minimum and a user maximum.

** Tolerance for time at peak profile temperature (tp) is defined as a supplier minimum and a user maximum.

Numbers of taping

- 2,000 pieces/reel

Label marking

- The following items shall be marked on the production and shipping
- Label on the reel

Production Label

- ✓ Part No.
- ✓ Description
- ✓ Quantity
- ✓ Produce No.
- ✓ Taping No.

Shipping Label

- ✓ Customer's Name
- ✓ Customer's Part No.
- ✓ Manufacturer's Part No.
- ✓ Manufacturer's Name
- ✓ Manufacturer's Country

Care note for use

➢ **Storage Condition**: Temperature 25 to 35°C, Humidity 45 to 75% RH

➢ **Use Temperature**:

✓ Minimum Temperature: -55°C Ambient temperature of molded power inductor.

✓ Maximum Temperature: +125°C The value of temperature including ambient of the transformer and temperature rise of molded power inductor.

✓ There is not a problem from -55°C ~ +125°C in a reliability test.

✓ However, this is not meant a temperature grade guarantee of UL.

➢ **Model**: When this molded power inductor was used in a similar or new product to the original one, sometimes it might be unable to satisfy the specifications due to difference of condition of usage.

➢ **Drop**: If the molded power inductor suffered mechanical stress such as drop, characteristics may become poor (due to damage on coil bobbin, etc.).Never use such stressed molded power inductor.

Care note for Safety

- Provision to Abnormal Condition

This molded power inductor itself does not have any protective function in abnormal condition such as overload, short-circuit and open-circuit conditions, etc. Therefore, it shall be confirmed as the end product that there is no risk of smoking, fire, dielectric withstand voltage, insulation resistance, etc. in abnormal conditions to provide protective devices and/or protection circuit in the end product.

- Temperature Rise

Temperature rise of molded power inductor depends on the installation condition on end products. It shall be confirmed on the actual end product that temperature rise of molded power inductor is in the limit of specified temperature class.

- Dielectric Strength

Dielectric withstanding test with higher voltage than specific value will damage insulating material and shorten its life.

- Water

This molded power inductor must not be used in wet condition by water, coffee or any liquid because insulation strength becomes very low on the condition.

- Potting

If this molded power inductor is potted in some compound, coating material of magnet wire might be occasionally damaged. Please ask us if you intend to pot this molding.

- Detergent

Please consult our company once in case of this because the confirmation of reliability etc. is needed when the washing medicine is used for the molded power inductor.

- Notes

This electronic component has been designed and developed for usage in general electronic equipment only, not for usage in areas such as military, aerospace, aviation, transportation (automotive control, train control, ship control) etc.. TDG Holding Co., Ltd. must be informed about the intent of such usage before the design-in stage and the parties must have executed an agreement specifically governing such use. In addition, sufficient reliability evaluation checks for safety must be performed on every electronic component.