TM06N03MI

N-Channel Enhancement Mosfet

General Description

- Low $R_{DS(ON)}$
- RoHS and Halogen-Free Compliant

Applications

- Load switch
- PWM

General Features

V_{DS} = 30V I_D =6.0A

$R_{DS(ON)}$= 24mΩ(typ.)@ V_{GS}=10V

100% UIS Tested

100% R_g Tested

Green Product

MI:SOT-23-3L

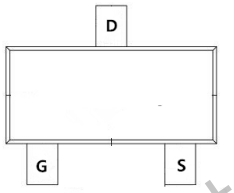

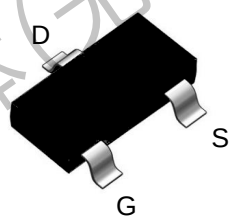

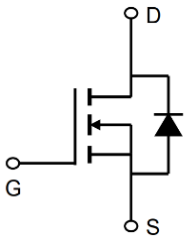

Marking: XO

Absolute Maximum Ratings (T_C=25℃unless otherwise noted)

Symbol	Parameter	Rating	Units
V_{DS}	Drain-Source Voltage	30	V
V_{GS}	Gate-Source Voltage	±12	V
I_D@T_A=25℃	Continuous Drain Current, V_{GS} @ 4.5V[1]	6.0	A
I_D@T_A=70℃	Continuous Drain Current, V_{GS} @ 4.5V[1]	4.9	A
I_{DM}	Pulsed Drain Current[2]	20	A
P_D@T_A=25℃	Total Power Dissipation[3]	1.0	W
T_{STG}	Storage Temperature Range	-55 to 150	℃
T_J	Operating Junction Temperature Range	-55 to 150	℃

Thermal Data

Symbol	Parameter	Typ.	Max.	Unit
$R_{\theta JA}$	Thermal Resistance Junction-ambient [1]	---	170	℃/W
$R_{\theta JC}$	Thermal Resistance Junction-Case[1]	---	---	℃/W

台懋半导体(无锡)有限公司

© 2018 Tritech-MOS Technology Corporation

TM06N03MI

N-Channel Enhancement Mosfet

Electrical Characteristics (T_J=25 ℃, unless otherwise noted)

Symbol	Parameter	Conditions	Min.	Typ.	Max.	Unit
BV_{DSS}	Drain-Source Breakdown Voltage	V_{GS}=0V , I_D=250uA	30	---	---	V
$\triangle BV_{DSS}/\triangle T_J$	BVDSS Temperature Coefficient	Reference to 25℃ , I_D=1mA	---	0.029	---	V/℃
$R_{DS(ON)}$	Static Drain-Source On-Resistance[2]	V_{GS}=10V , I_D=5A	---	24	26	mΩ
		V_{GS}=4.5V , I_D=3A	---	27	29	
$V_{GS(th)}$	Gate Threshold Voltage	V_{GS}=V_{DS} , I_D =250uA	0.5	0.9	1.2	V
$\triangle V_{GS(th)}$	$V_{GS(th)}$ Temperature Coefficient		---	-2.82	---	mV/℃
I_{DSS}	Drain-Source Leakage Current	V_{DS}=24V , V_{GS}=0V , T_J=25℃	---	---	1	uA
		V_{DS}=24V , V_{GS}=0V , T_J=55℃	---	---	5	
I_{GSS}	Gate-Source Leakage Current	V_{GS}=±12V , V_{DS}=0V	---	---	±100	nA
gfs	Forward Transconductance	V_{DS}=5V , I_D=5A	---	25	---	S
R_g	Gate Resistance	V_{DS}=0V , V_{GS}=0V , f=1MHz	---	1.5	---	Ω
Q_g	Total Gate Charge (4.5V)	V_{DS}=15V , V_{GS}=4.5V , I_D=5.8A	---	11.5	---	nC
Q_{gs}	Gate-Source Charge		---	1.6	---	
Q_{gd}	Gate-Drain Charge		---	2.9	---	
$T_{d(on)}$	Turn-On Delay Time	V_{DD}=15V , V_{GS}=10V , R_G=3Ω I_D=5A	---	5	---	ns
T_r	Rise Time		---	47.	---	
$T_{d(off)}$	Turn-Off Delay Time		---	26	---	
T_f	Fall Time		---	8	---	
C_{iss}	Input Capacitance	V_{DS}=15V , V_{GS}=0V , f=1MHz	---	490	---	pF
C_{oss}	Output Capacitance		---	130	---	
C_{rss}	Reverse Transfer Capacitance		---	36	---	
I_S	Continuous Source Current[1,4]	V_G=V_D=0V , Force Current	---	---	6.0	A
V_{SD}	Diode Forward Voltage[2]	V_{GS}=0V , I_S=1A , T_J=25℃	---	---	1.2	V

Note :

1、The data tested by surface mounted on a 1 inch^2 FR-4 board with 2OZ copper.

2、The data tested by pulsed , pulse width ≦ 300us , duty cycle ≦ 2%

3、The power dissipation is limited by 150℃ junction temperature

4 、The data is theoretically the same as I_D and I_{DM} , in real applications , should be limited by total power dissipation.

台懋半导体(无锡)有限公司

TM06N03MI

N-Channel Enhancement Mosfet

Typical Characteristics

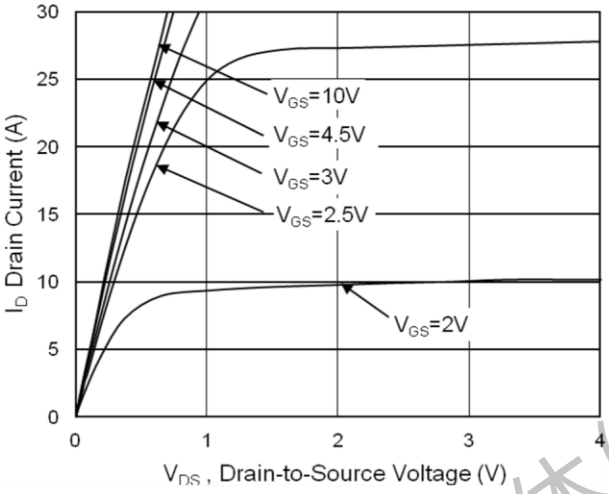

Fig.1 Typical Output Characteristics

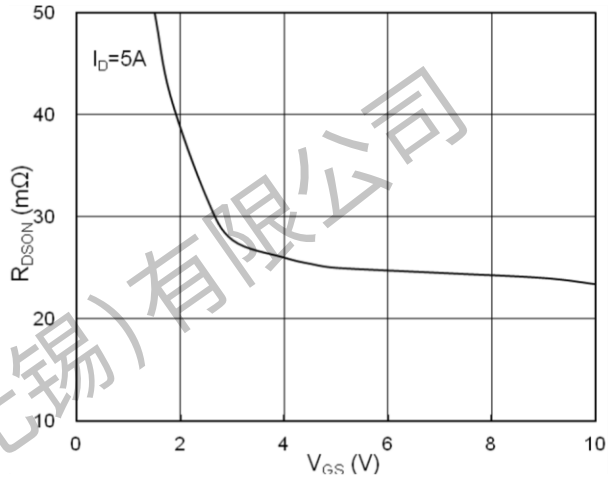

Fig.2 On-Resistance vs. Gate-Source

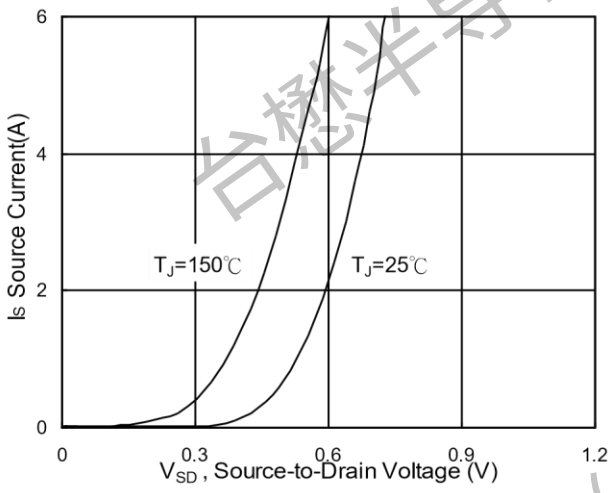

Fig.3 Forward Characteristics Of Reverse

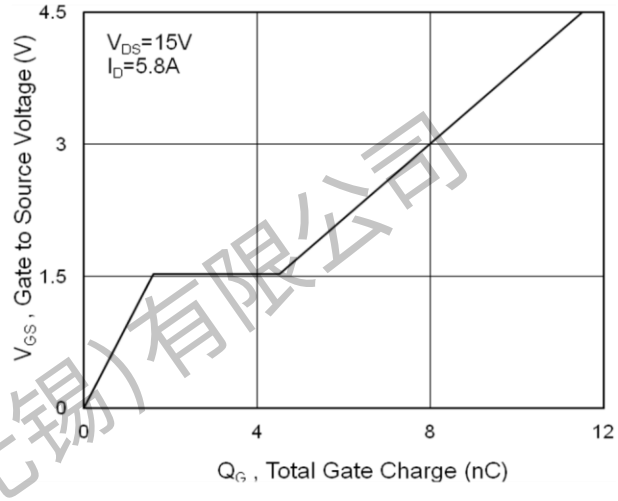

Fig.4 Gate-Charge Characteristics

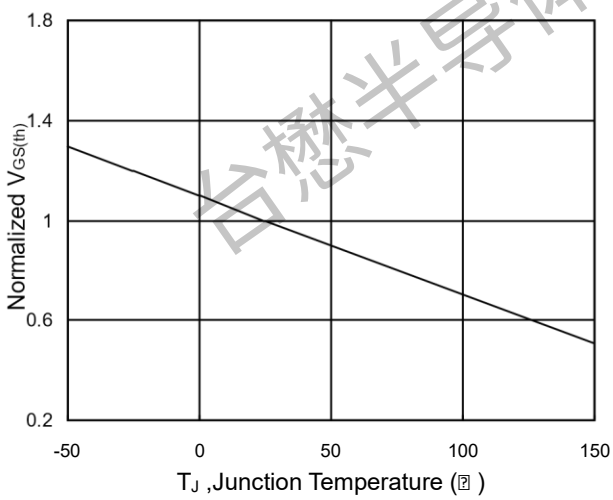

Fig.5 Normalized $V_{GS(th)}$ vs. T_J

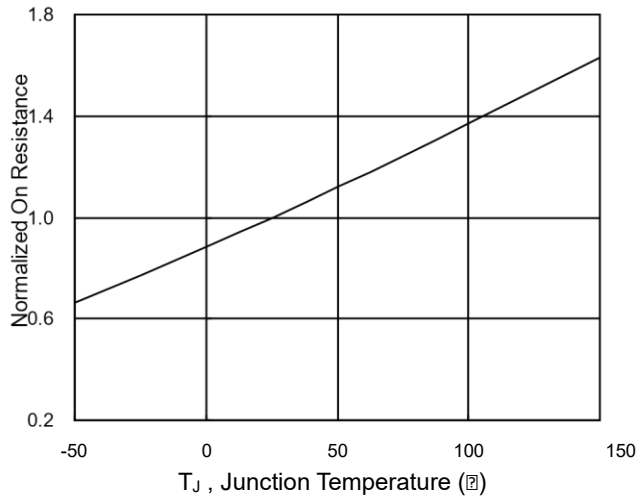

Fig.6 Normalized R_{DSON} vs. T_J

台懋半导体(无锡)有限公司

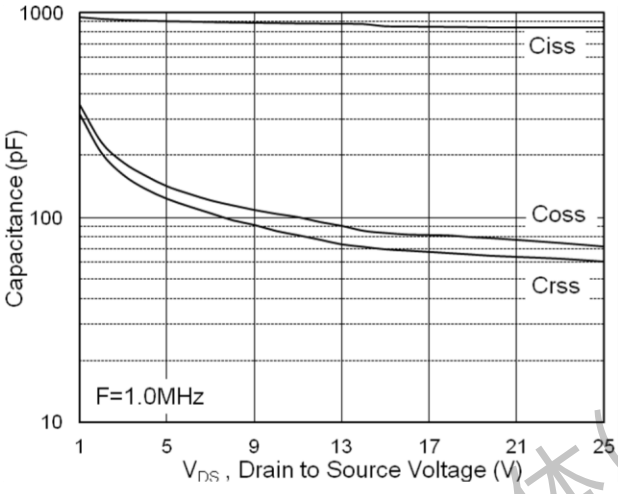

Fig.7 Capacitance

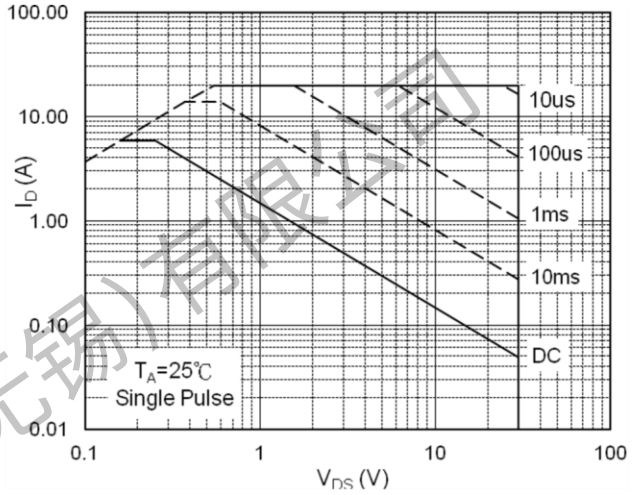

Fig.8 Safe Operating Area

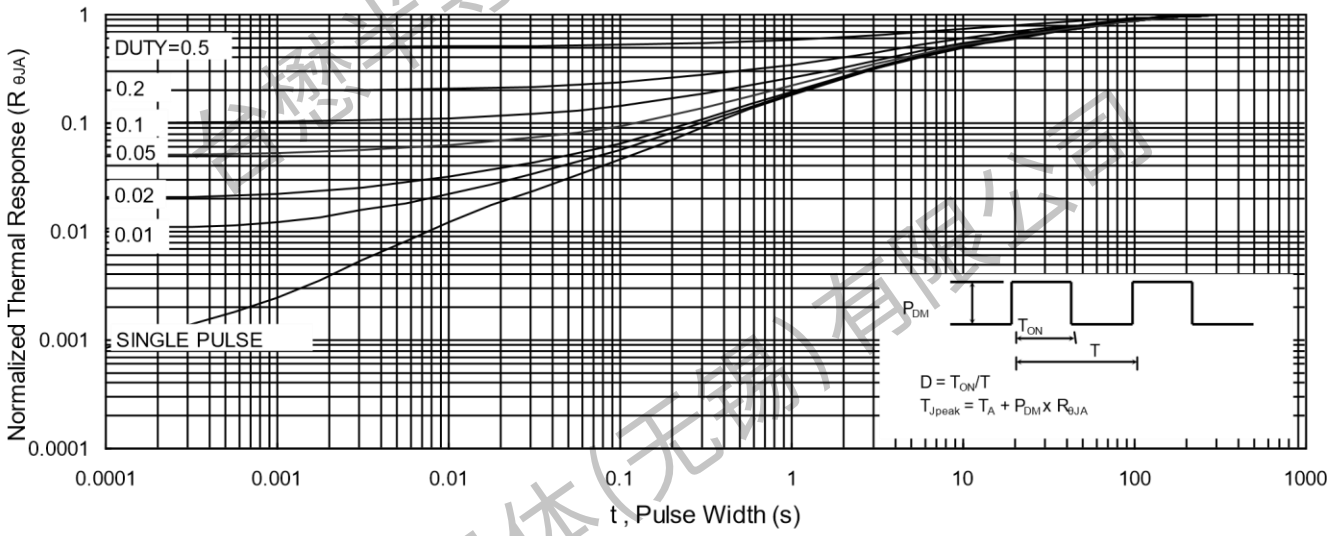

Fig.9 Normalized Maximum Transient Thermal Impedance

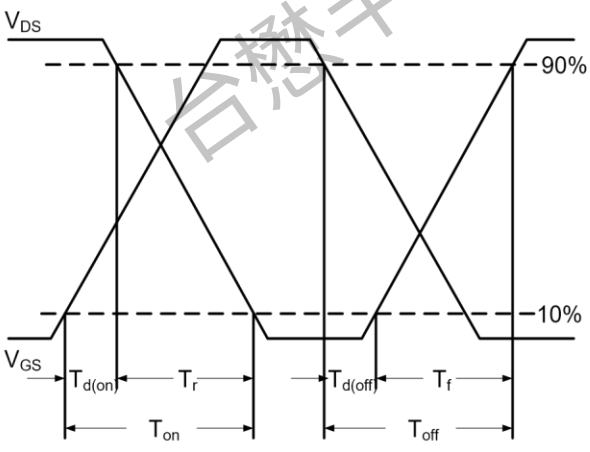

Fig.10 Switching Time Waveform

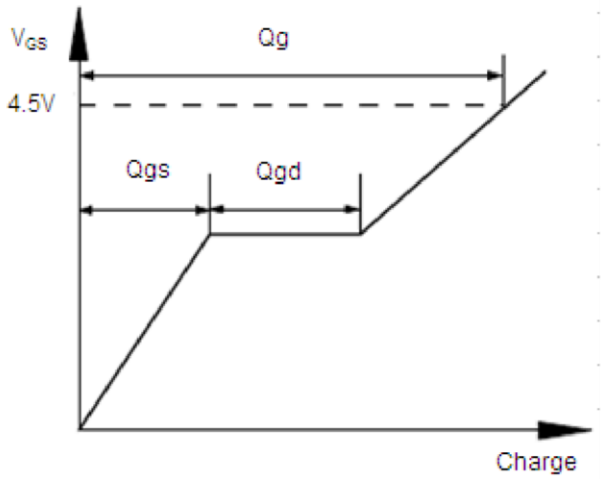

Fig.11 Gate Charge Waveform

台懋半导体(无锡)有限公司

Package Mechanical Data:SOT-23-3L

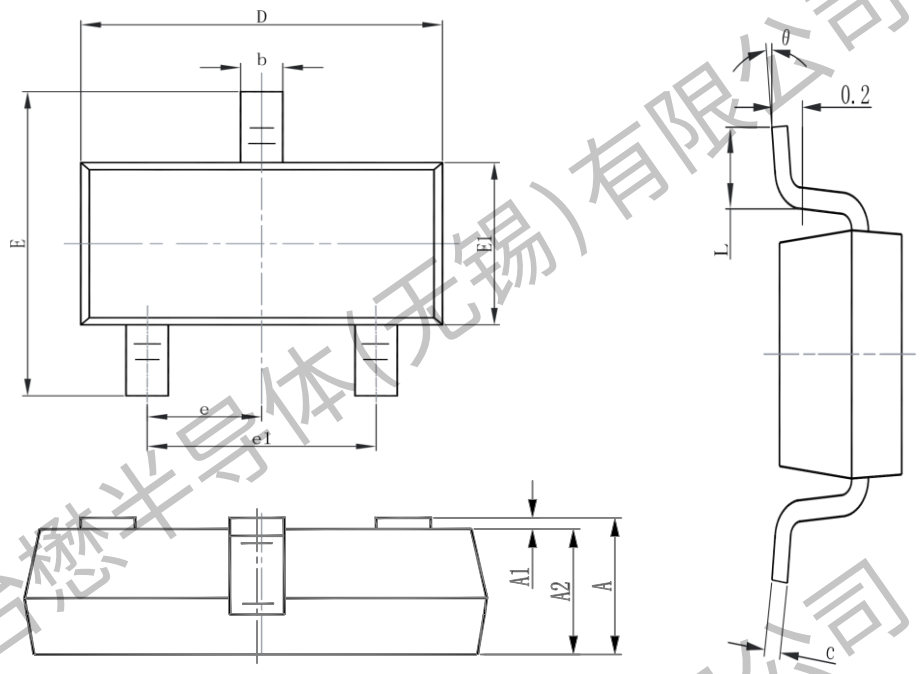

Symbol	Dimensions In Millimeters		Dimensions In Inches	
	Min.	Max.	Min.	Max.
A	1.050	1.250	0.041	0.049
A1	0.000	0.100	0.000	0.004
A2	1.050	1.150	0.041	0.045
b	0.300	0.500	0.012	0.020
c	0.100	0.200	0.004	0.008
D	2.820	3.020	0.111	0.119
E1	1.500	1.700	0.059	0.067
E	2.650	2.950	0.104	0.116
e	0.950(BSC)		0.037(BSC)	
e1	1.800	2.000	0.071	0.079
L	0.300	0.600	0.012	0.024
θ	0°	8°	0°	8°

台懋半导体(无锡)有限公司

TM06N03MI **N-Channel Enhancement Mosfet**

SOT-23-3L Packing

1.The method of packaging and dimension are shown as below figure. (Dimension in mm)

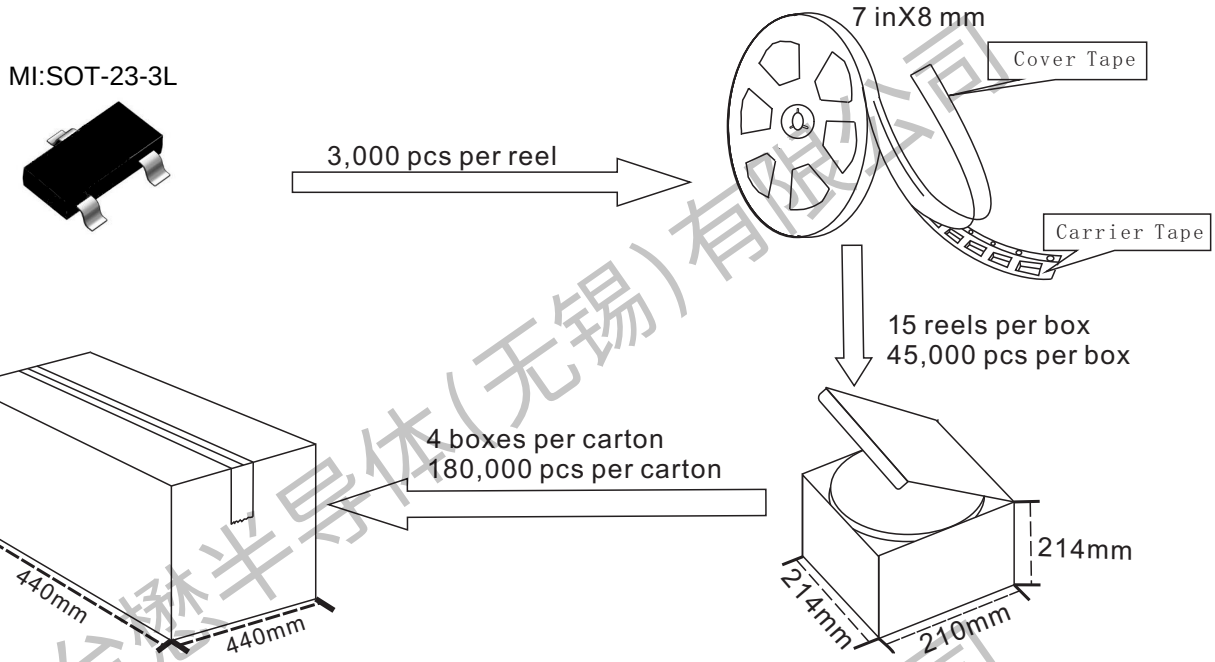

SOT-23-3L Embossed Carrier Tape

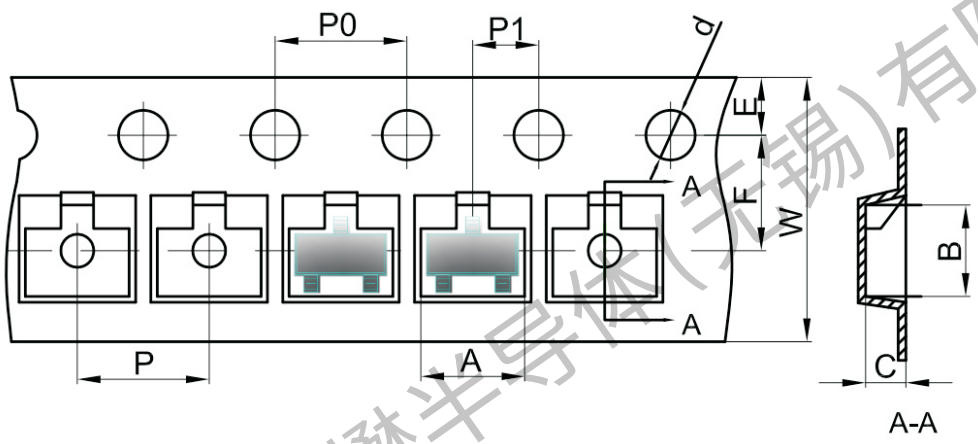

Dimensions are in millimeter										
Pkg type	A	B	C	d	E	F	P0	P	P1	W
SOT-23	3.15	2.77	1.22	Ø1.50	1.75	3.50	4.00	4.00	2.00	8.00

SOT-23-3L Tape Leader and Trailer

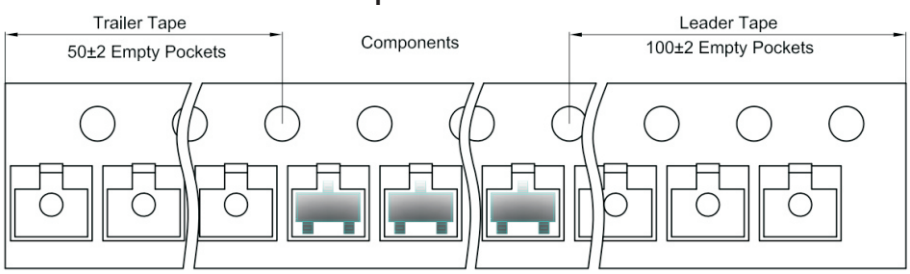

© 2018 Tritech-MOS Technology Corporation

Important Notices and Disclaimers

- Tritech-MOS Technology Corp.reserves the right to change thisdocument, its products, and specifications at any time without prior notice.
- Before final design, purchase, or use, customers should obtain and confirm the latest product information and specifications.
- Tritech-MOS Technology Corp. makes no warranties, representations or warranties regarding the suitability of its products for any specific purpose, and Tritech-MOS Technology Corp. does not assume any responsibility for application assistance or customer product design.
- Tritech-MOS Technology Corp. does not guarantee or assume any responsibility for the purchase or use of any unexpected or unauthorized products.
- Any intellectual property rights of Tritech-MOS Technology Corp. are not licensed through implicate or other means.
- Products of Tritech-MOS Technology Corp. are not included as critical components in life support equipment or systems without explicit written approval from Tritech-MOS Technology Corp.

Revision history:

Date	Rev	Description	Page
2023.06.04	23.06	Original	

台懋半导体(无锡)有限公司
台懋半导体(无锡)有限公司