RoHS compliant
by exemption

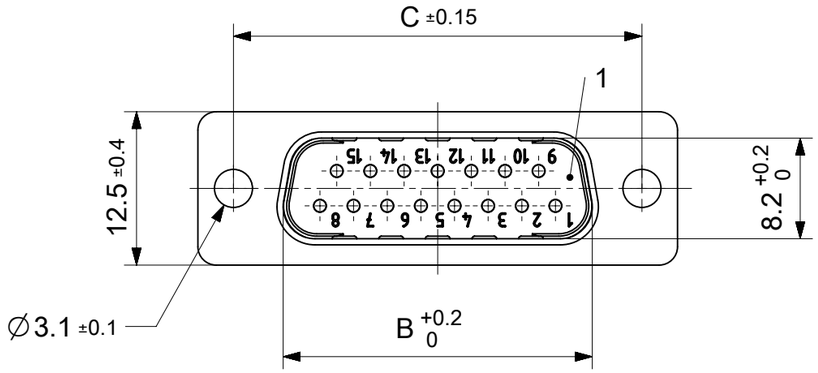

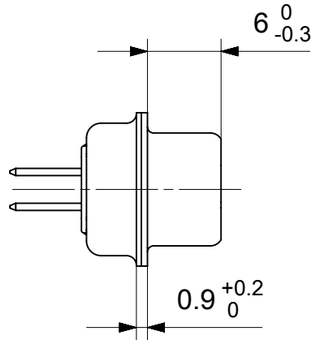

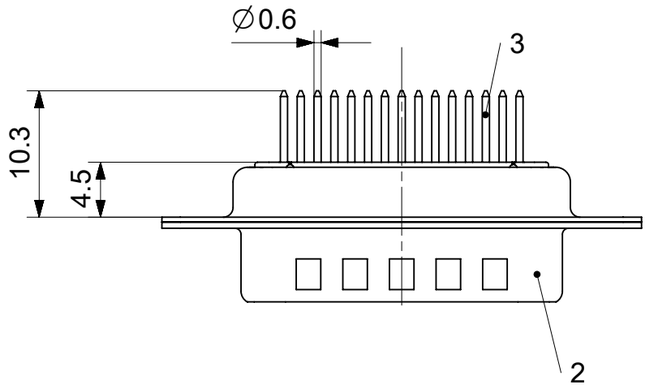

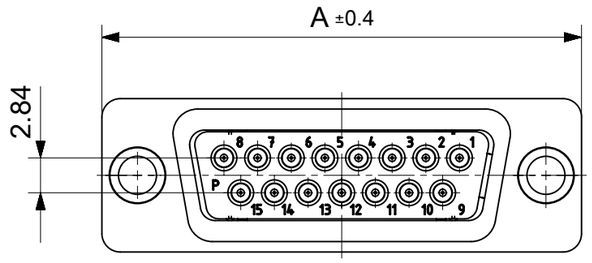

FCT Part number:

Fxx*1)P1y*2)

e.g. F15P1G1

*1) xx No. of contacts 09, 15, 25 or 37

*2) y for performance classes 1, 2 or 3
(contact cycle for G1/G2/G3 = 500/200/50)

Material Number	xx*1)	y*2)	A[mm]	B[mm]	C[mm]	*E[mm]
1727040074	09	G1	30.8	16.9	25	∅1
1731090121		G2				
1727040062	15	G1	39.1	25.2	33.3	
1731090122		G2				
1727040066	25	G1	53	38.9	47.04	
1731090123		G2				
1727040071	37	G1	69.3	55.3	63.5	
1731090124		G2				

*PCB hole patterns ∅E see document 2195600023

No.	Pc.	Part	Type Description/Material	Surface plating/ Color/Class
3	xx	Signal contact	P1 / Brass	G1 / G2
2	1	Shell	Steel	tin plated
1	1	Insulator	PBT (-55°C to +125°C) acc. UL94V-0	white

MEASUREMENTS WITHOUT TOLERANCE ACC TO ISO 2768-m

REPLACEMENT FOR DOCUMENT NUMBER: FxxP1Gy

THIS DRAWING CONTAINS INFORMATION THAT IS PROPRIETARY TO MOLEX ELECTRONIC TECHNOLOGIES, LLC AND SHOULD NOT BE USED WITHOUT WRITTEN PERMISSION

FUNCTIONAL SYMBOLS: FA = 0, FC = 0, FP = 0

DIVISIONAL SYMBOLS

DIMENSION UNITS: mm | SCALE: 2:1

GENERAL TOLERANCES (UNLESS SPECIFIED)

ANGULAR TOL	± °
4 PLACES	±
3 PLACES	±
2 PLACES	±
1 PLACE	±
0 PLACES	±

DRAFT WHERE APPLICABLE MUST REMAIN WITHIN DIMENSIONS

CURRENT REV DESC:

EC NO: 713729
DRWN: MTEUBEL 2022/07/11
CHK'D: MSTEINBRUECK 2022/07/11
APPR: MSTEINBRUECK 2022/07/11

INITIAL REVISION:
DRWN: GOOLAM 2021/11/24
APPR: MTEUBEL 2022/05/11

FIRST ANGLE PROJECTION | DRAWING: A3-SIZE | SERIES: 172704

molex

FCT D-SUB MINIATURE CONNECTOR

PRODUCT CUSTOMER DRAWING

DOCUMENT NUMBER	DOC TYPE	DOC PART	REVISION
1727040074	PSD	000	A1

MATERIAL NUMBER	CUSTOMER	SHEET NUMBER
SEE TABLE	GENERAL MARKET	1 OF 1

DOCUMENT STATUS	P1	RELEASE DATE	2022/07/11 09:15:25

FORMAT: master_format-A3
REVISION: J1
DATE: 2021/05/05

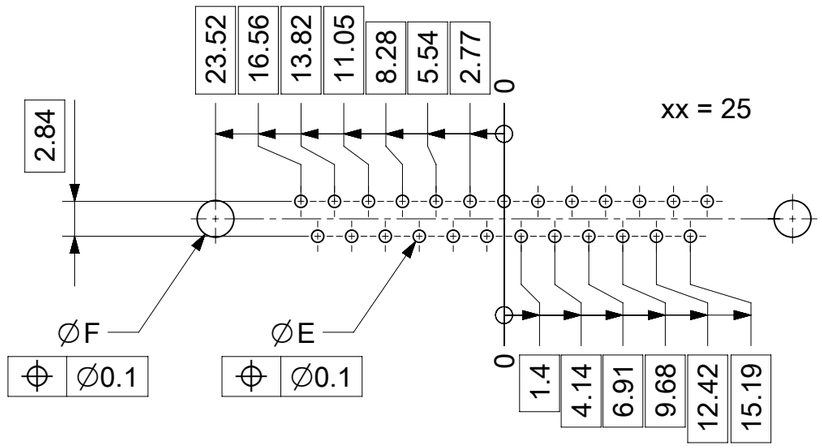

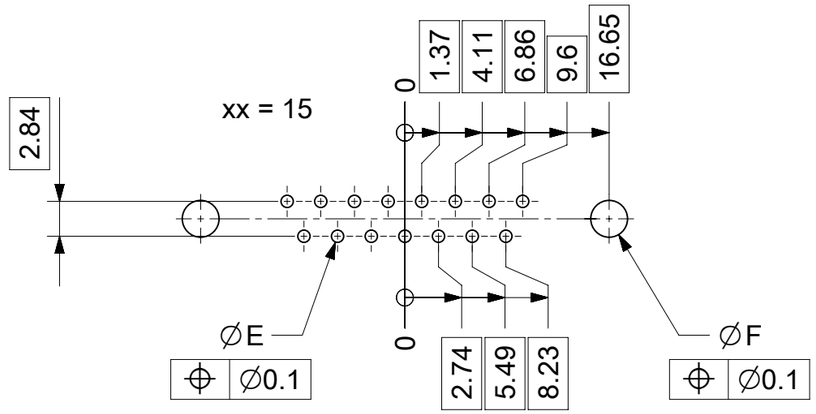

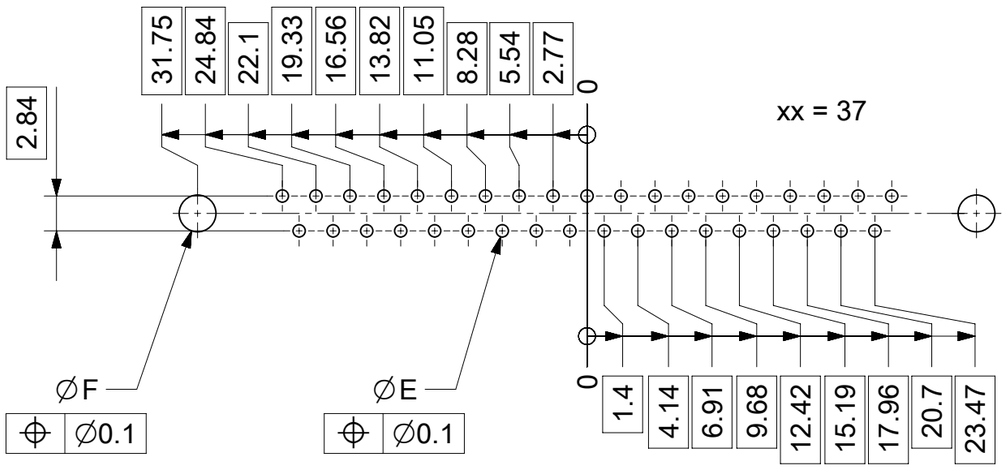

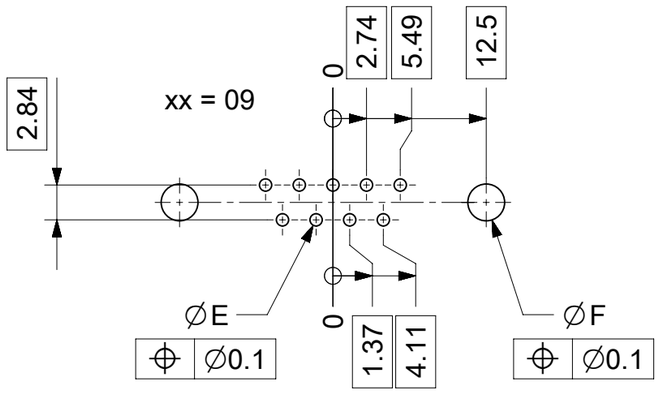

øE, øF see data sheet incl. connector
øF connectors with accessories only

MEASUREMENTS WITHOUT TOLERANCE ACC TO ISO 2768-m

REPLACEMENT FOR DOCUMENT NUMBER: AM0023

THIS DRAWING CONTAINS INFORMATION THAT IS PROPRIETARY TO MOLEX ELECTRONIC TECHNOLOGIES, LLC AND SHOULD NOT BE USED WITHOUT WRITTEN PERMISSION

FUNCTIONAL SYMBOLS: FA = 0, FC = 0, FP = 0

DIVISIONAL SYMBOLS

DIMENSION UNITS	SCALE
mm	2:1

GENERAL TOLERANCES (UNLESS SPECIFIED)

ANGULAR TOL	± °
4 PLACES	±
3 PLACES	±
2 PLACES	±
1 PLACE	±
0 PLACES	±

DRAFT WHERE APPLICABLE MUST REMAIN WITHIN DIMENSIONS

CURRENT REV DESC:

EC NO: 713905
DRWN: SKANDB 2022/05/16
CHK'D: MTEUBEL 2022/07/12
APPR: MTEUBEL 2022/07/12

INITIAL REVISION:
DRWN: SKANDB 2022/05/16
APPR: MTEUBEL 2022/07/12

FIRST ANGLE PROJECTION

DRAWING	SERIES
A3-SIZE	219560

molex

FCT PCB HOLE PATTERN STRAIGHT CONTACT
NO. OF CONTACTS 09-37

PRODUCT CUSTOMER DRAWING

DOCUMENT NUMBER	DOC TYPE	DOC PART	REVISION
2195600023	PSD	000	A

MATERIAL NUMBER	CUSTOMER	SHEET NUMBER
219560	GENERAL MARKET	1 OF 1

DOCUMENT STATUS	P1	RELEASE DATE	2022/07/12 08:25:55

FORMAT: master-tb-mod-A3
REVISION: J1
DATE: 2021/05/01