K9GBG08U0A
K9LCG08U1A
K9HDG08U5A

Final

32Gb A-die NAND Flash

Multi-Level-Cell (2bit/cell)

datasheet

SAMSUNG ELECTRONICS RESERVES THE RIGHT TO CHANGE PRODUCTS, INFORMATION AND SPECIFICATIONS WITHOUT NOTICE.

Products and specifications discussed herein are for reference purposes only. All information discussed herein is provided on an "AS IS" basis, without warranties of any kind.

This document and all information discussed herein remain the sole and exclusive property of Samsung Electronics. No license of any patent, copyright, mask work, trademark or any other intellectual property right is granted by one party to the other party under this document, by implication, estoppel or otherwise.

Samsung products are not intended for use in life support, critical care, medical, safety equipment, or similar applications where product failure could result in loss of life or personal or physical harm, or any military or defense application, or any governmental procurement to which special terms or provisions may apply.

For updates or additional information about Samsung products, contact your nearest Samsung office.

All brand names, trademarks and registered trademarks belong to their respective owners.

ⓒ 2009 Samsung Electronics Co., Ltd. All rights reserved.

Revision History

Revision No.	History	Draft Date	Remark	Editor
0.0	1. Initial issue	Nov. 12, 2009	Draft	S.M.Lee
0.1	1. Value of Random Read is changed. 2. Package size is amended. (14x18 -> 13x18) 3. Package configuration for K9HDG08U5A-L and K9PFG08U5A-L is amended. 4. Pin descriptions for VccQ and VssQ are added. 5. Voltage on any pin relative to V_{SS} for VccQ=1.8V is added in table 2.1. 6. Temperature Under Bias(T_{BIAS}) is deleted. 7. Table 2.3 DC AND OPERATING CHARACTERISTICS is modified. (VccQ=1.8V added) 8. Frequency condition of Capacitance is changed from 1.0Mhz to 100Mhz. 9. Dummy Busy Time for Intelligent Copy-Back Read(tCBSY2) is added. 10. Dummy Busy Time for Intelligent Copy-Back Program(tDCBSYR2) is added. 11. Max. value of Cache Busy in Read Cache(tDCBSYR) is changed from 400us to 90us. 12. $\overline{RE}$ Pulse Width(tRP) is changed from 15ns to 12ns. 13. Read Cycle Time is changed from 30ns to 25ns. 14. $\overline{RE}$ Access Time(tREA) is changed from 25ns to 20ns. 15. $\overline{CE}$ Access Time(tCEA) is changed from 35ns to 25ns. 16. $\overline{WE}$ High to $\overline{RE}$ Low for Random data out(tWHR2) is changed from 300ns to 180ns. 17. Set feature command(EFh) is added. 18. Get feature command(EEh) is added.	Nov. 25, 2009	Draft	S.M.Lee
0.2	1. Product list is amended. 2. VccQ=1.8V is deleted. 3. Part ID of 52-LGA is fixed from K8XXG08UXA-LCB0/LIB0 to K8XXG08UXA-MCB0/MIB0. 4. Package thickness of K9HDB08U5A is fixed from 0.65mm to 0.75mm. 5. Description for Interleaving operation is deleted. 6. F2h command is deleted. 7. Meaning is swapped between tCBSY2 and tDCBSYR2. 8. tCWAW is added. 9. Value of tWHR2 is changed from 180ns to 300ns. 10. tFEAT is added. 11. Additional res iction of Addressing for Program operation is described.	Dec. 12, 2009	Draft	S.M.Lee
0.3	1. Description of tWW is amended. 2. The value of tCBSY2 is changed from 5ms to 500us. 3. The value of tDCBSYR2 is changed from 500us to 5ms. 4. Two-plane Copy-Back Program command is fixed. 5. Description of Status read for Intelligent Copy-Back Program is added.	Dec. 29, 2009	Draft	H.K.Kim
1.0	1. Pin Configuration of 48 TSOP is added. 2. 4.26 00h address ID Cycle is added. 3. 4.27 40h address ID Cycle is added. 4. 40h address ID definition table is added. 5. tCWAW at the register read out model is added. 6. Random read Time(tR) is changed from 80 μs to 250 μs.	May. 17, 2010	Final	Y.E.Yoon

The attached data sheets are prepared and approved by SAMSUNG Electronics. SAMSUNG Electronics CO., LTD. reserve the right to change the specifications. SAMSUNG Electronics will evaluate and reply to your requests and questions about device. If you have any questions, please contact the SAMSUNG branch office near your office.

Table Of Contents

32Gb A-die NAND Flash 1

1.0 Introduction 5
1.1 Product List 5
1.2 Features 5
1.3 General Description 5
1.4 Pin Configuration (52LGA) 6
1.4.1 Package Dimensions 6
1.5 Package Configuration (52LGA) 7
1.5.1 Package Dimensions 7
1.6 Package Configuration (52LGA) 8
1.6.1 Package Dimensions 8
1.7 Pin Configuration (48TSOP, mono) 9
1.7.1 Package Dimensions 9
1.8 Pin Configuration (48TSOP, DDP) 10
1.8.1 Package Dimensions 10
1.9 Pin Configuration (48TSOP, QDP) 11
1.9.1 Package Dimensions 11
1.10 Pin Description 12

2.0 PRODUCT INTRODUCTION 15
2.1 Absolute Maximum Ratings 16
2.2 Recommended Operating Conditions 16
2.3 DC And Operating Characteristics(Recommended operating conditions otherwise noted.) 16
2.4 Valid Block 17
2.5 AC Test Condition 17
2.6 Capacitance(TA=25°C, VCC=3.3V, f=100MHz) 17
2.7 Mode Selection 18
2.8 Program/Erase Characteristics 18
2.9 AC Timing Characteristics for Command / Address / Data Input 19
2.10 AC Characteristics for Operation 19

3.0 NAND Flash Technical Notes 20
3.1 Initial Invalid Block(s) 20
3.2 Identifying Initial Invalid Block(s) 20
3.3 Error in write or read operation 21
3.4 Addressing for program operation 23
3.5 System Interface Using CE don't-care. 25

4.0 TIMING DIAGRAMS 26
4.1 Command Latch Cycle 26
4.2 Address Latch Cycle 26
4.3 Input Data Latch Cycle 27
4.4 * Serial Access Cycle after Read(CLE=L, WE=H, ALE=L) 27
4.5 Serial Access Cycle after Read(EDO Type, CLE=L, WE=H, ALE=L) 28
4.6 Status Read Cycle 28
4.7 Read Operation 29
4.8 Read Operation(Intercepted by CE) 29
4.9 Random Data Output In a Page 30
4.10 Cache Read Operation 31
4.11 Two-Plane Page Read Operation with Two-Plane Random Data Out 32
4.12 Two-Plane Cache Read Operation with Two-Plane Random Data Out (1/2) 33
4.13 Two-Plane Cache Read Operation with Two-Plane Random Data Out (2/2) 34
4.14 Page Program Operation 34
4.15 Page Program Operation with Random Data Input 35
4.16 Copy-Back Program Operation with Random Data Input 36
4.17 Intelligent Copy-Back Program(1/2) 37
4.18 Cache Program Operation(available only within a block) 39
4.19 Two-Plane Copy-Back Program 40
4.20 Two-Plane Intelligent Copy-Back Program(1/3) 41
4.21 Two-Plane Page Program Operation 44
4.22 Two-Plane Cache Program Operation 45
4.23 Block Erase Operation 46
4.24 Two-Plane Block Erase Operation 47

4.25 Read ID Operation 48
4.26 00h Address ID Cycle 48
4.27 40h Address ID Cycle 48
4.27.1 ID Definition Table 49

5.0 DEVICE OPERATION 51
5.1 Page Read 51
5.2 Cache Read 52
5.3 Two-plane Page Read 54
5.4 Two-plane Cache Read 55
5.5 Page Program 56
5.6 Copy-back Program 57
5.7 Intelligent Copy-Back Program 58
5.8 Cache Program 59
5.9 Register Read Out Mode 1 62
5.10 Register Read Out Mode 2 62
5.11 Two-plane Register Read Out Mode 1 63
5.12 Two-plane Register Read Out Mode 2 64
5.13 Two-plane Page Program 65
5.14 Two-plane Copy-back Program 66
5.15 Two-Plane Intelligent Copy-back Program(1/2) 69
5.16 Two-plane Cache Program 72
5.17 Block Erase 73
5.18 Two-plane Block Erase 73
5.19 Read Status 74
5.20 Read Id 75
5.21 Reset 75
5.22 Output driver setting 76
5.23 Ready/busy 78
5.24 00h Address ID Cycle 79
5.25 40h Address ID Cycle 79
5.26 Device Identification Table Read Operation 79

6.0 DATA PROTECTION & POWER UP SEQUENCE 81
6.1 WP AC Timing guide 82

1.0 Introduction

1.1 Product List

Part Number	Density	Interface	VccQ Range	Vcc Range	Organization	PKG Type
K9GBG08U0A-M	32Gb	Conventional	2.7V ~ 3.6V	2.7V ~ 3.6V	x8	52LGA 48TSOP
K9LCG08U1A-M	64Gb					
K9HDG08U5A-M	128Gb					

1.2 Features

- Voltage Supply
  - Core voltage : 3.3V(2.7V ~ 3.6V)
  - I/O voltage : 3.3V(2.7V~ 3.6V)
- Organization of Single die
  - Memory Cell Array : 8,832 x 519K x 8bit
  - Data Register : (8K + 640) x 8bit
- Automatic Program and Erase
  - Page Program : (8K + 640)Byte
  - Block Erase : (1M + 80K)Byte
- Page Read Operation
  - Page Size : (8K + 640)Byte
  - Random Read(tR) : 250μs(Average Typ.), 300μs(Average Max.)
  - Serial Access : 25ns(Min.)
- Memory Cell : 2bit / Memory Cell
- Write Cycle Time
  - Program time : 1.3ms(Typ.)
  - Block Erase Time : 1.5ms(Typ.)
- Command/Address/Data Multiplexed I/O Port
- Hardware Data Protection
  - Program/Erase Lockout During Power Transitions
- Reliable CMOS Floating-Gate Technology
  - ECC : 40bit/(1K+80)Byte
  - Endurance & Data Retention : Please refer to the Qualification report
- Command Register Operation
- Unique ID for Copyright Protection

- Package :
  - K9GBG08U0A-MCB0/MIB0 : Pb/Halogen-Free Package
    52-Pin LGA (13 x 18 / 1.00 mm pitch)
  - K9LCG08U1A-MCB0/MIB0 : Pb/Halogen-Free Package
    52-Pin LGA (13 x 18 / 1.00 mm pitch)
  - K9HDG08U5A-MCB0/MIB0 : Pb/Halogen-Free Package
    52-Pin LGA (13 x 18 / 1.00 mm pitch)
  - K9GBG08U0A-SCB0/SIB : Pb/Halogen-Free Package
    48-Pin TSOP (12 x 20 / 1.00 mm pitch)
  - K9LCG08U0A-SCB0/SIB0 : Pb/Halogen-Free Package
    48-Pin TSOP (12 x 20 / 1.00 mm pitch)
  - K9HDG08U1A-SCB0/SIB0 : Pb/Halogen-Free Package
    48-Pin TSOP (12 x 20 / 1.00 mm pitch)

1.3 General Description

The device is offered in 3.3V Vcc. Its NAND cell provides the most cost-effective solution for the solid state mass storage market. A program operation can be performed in typical 1.3ms on the 8,832-byte page and an erase operation can be performed in typical 1.5ms on a (1M+80K)byte block. Data in the data register can be read out at Read cycle time(tRC) per byte. The I/O pins serve as the ports for address and data input/output as well as command input. The on-chip write controller automates all program and erase functions including pulse repetition, where required, and internal verification and margining of data. Even the write-intensive systems can take advantage of the K9XXG08XXA′s extended reliability of P/E cycles which are presented in the Qualification report by providing ECC(Error Correcting Code) with real time mapping-out algorithm. These NAND devices are an optimum solution for large nonvolatile storage applications such as solid state file storage and other portable applications requiring non-volatility.

1.4 Pin Configuration (52LGA)

K9GBG08U0A-MCB0/MIB0

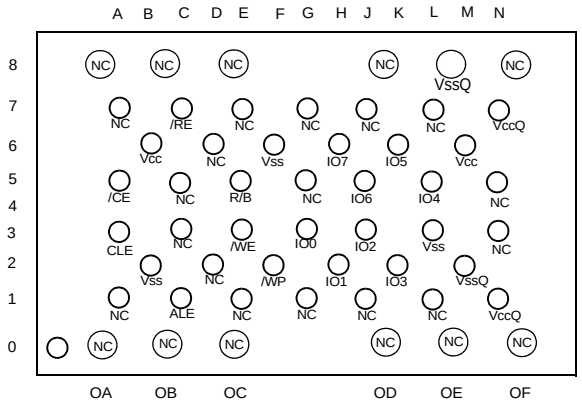

1.4.1 Package Dimensions

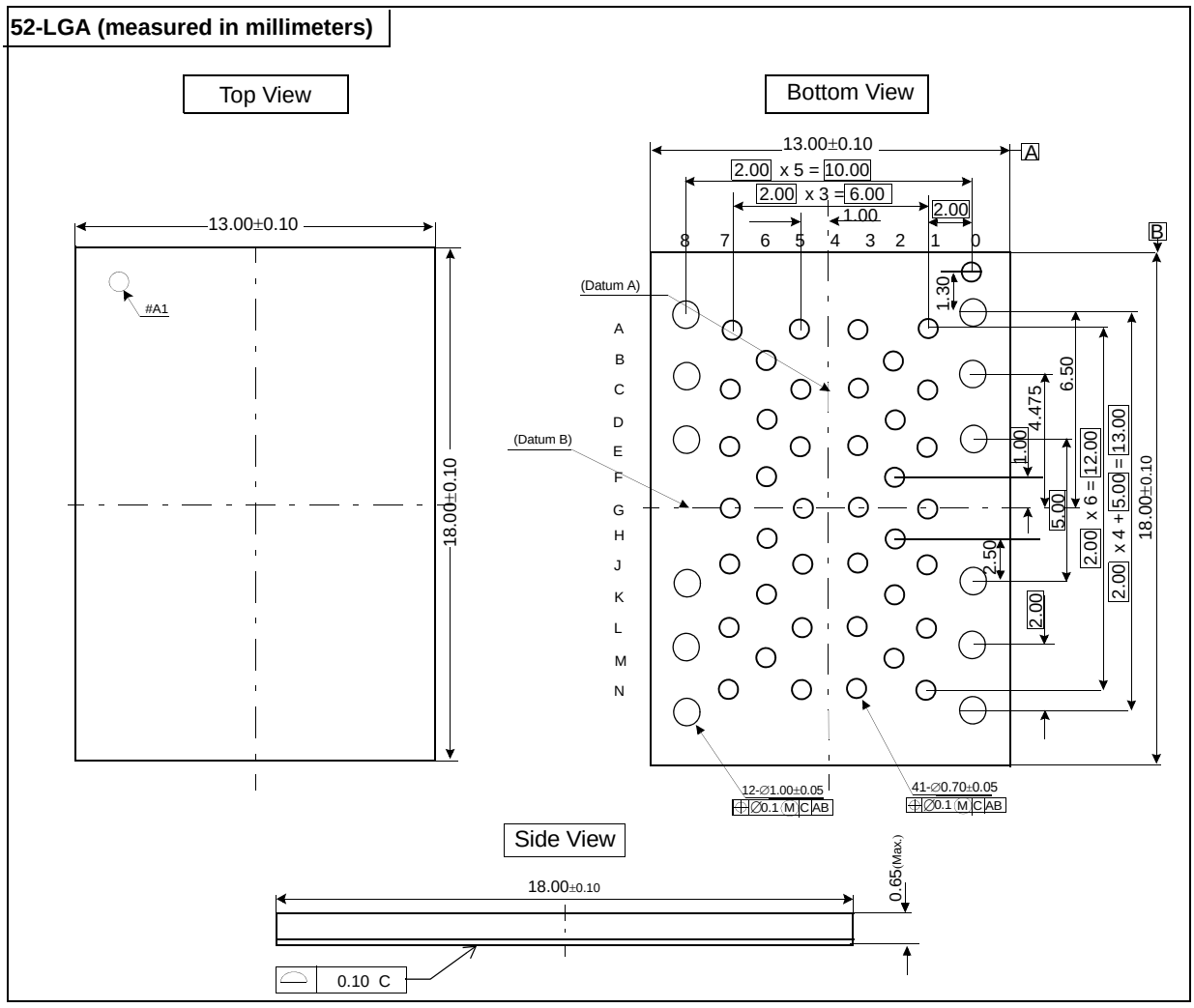

1.5 Package Configuration (52LGA)

K9LCG08U1A-MCB0/MIB0

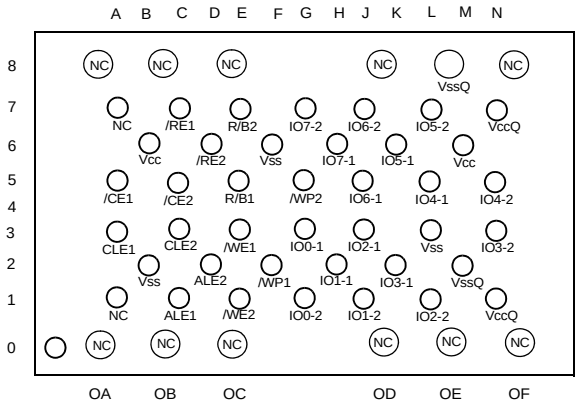

1.5.1 Package Dimensions

52-LGA (measured in millimeters)

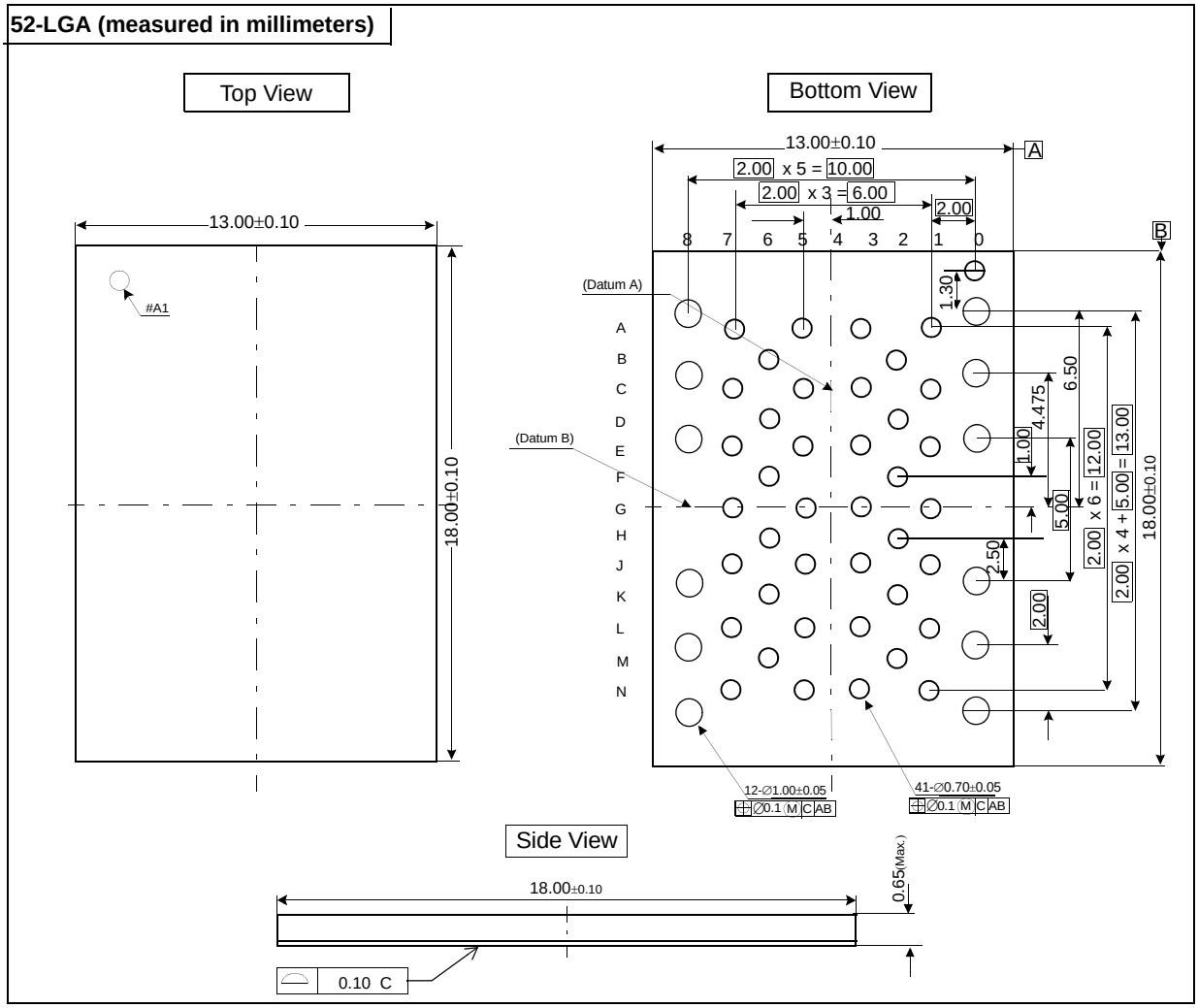

1.6 Package Configuration (52LGA)

K9HDG08U5A-MCB0/MIB0

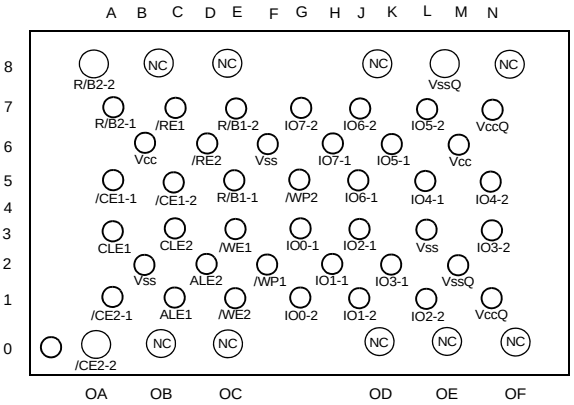

1.6.1 Package Dimensions

52-LGA (measured in millimeters)

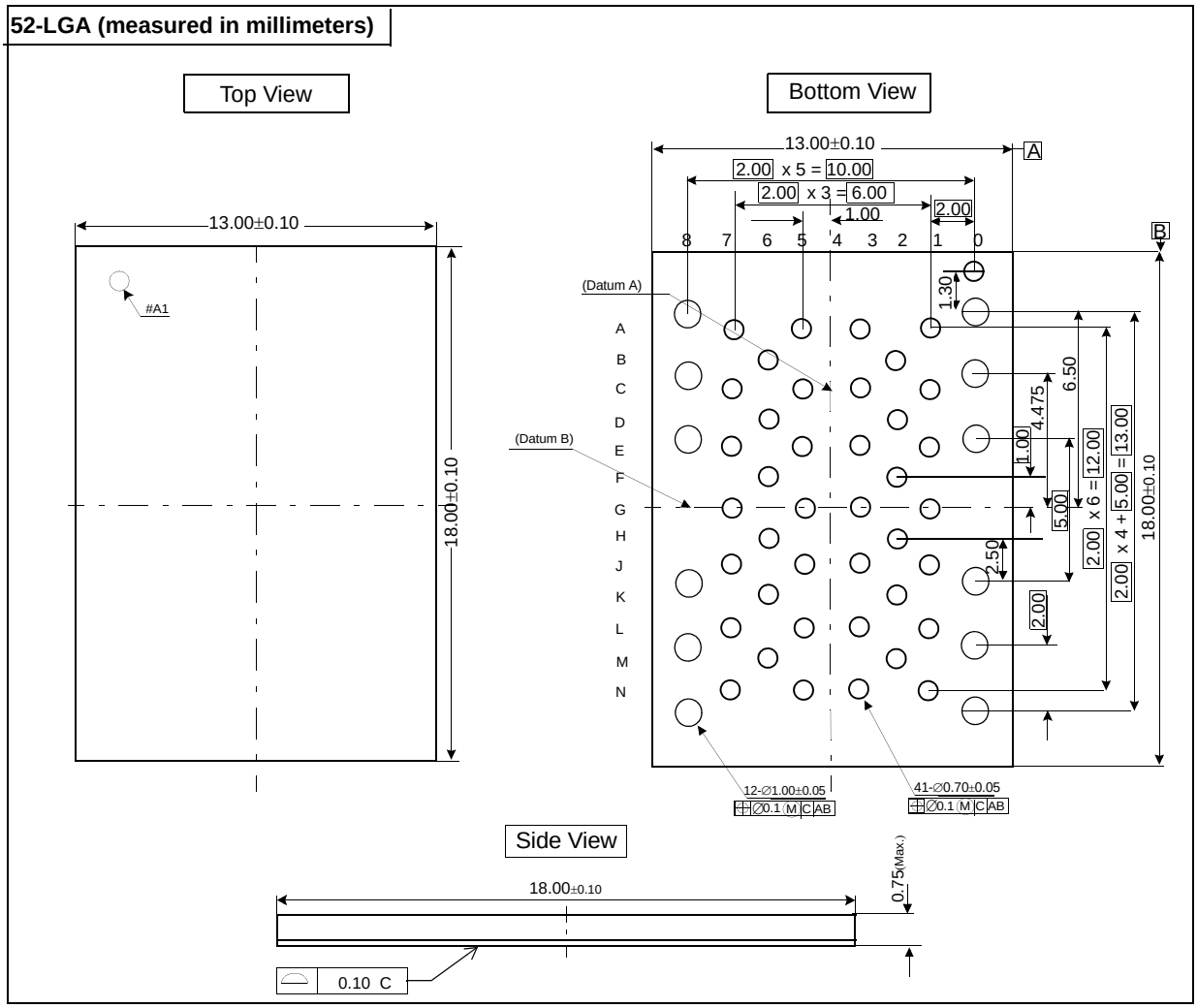

1.7 Pin Configuration (48TSOP, mono)

K9GBG08U0A-SCB0/SIB0

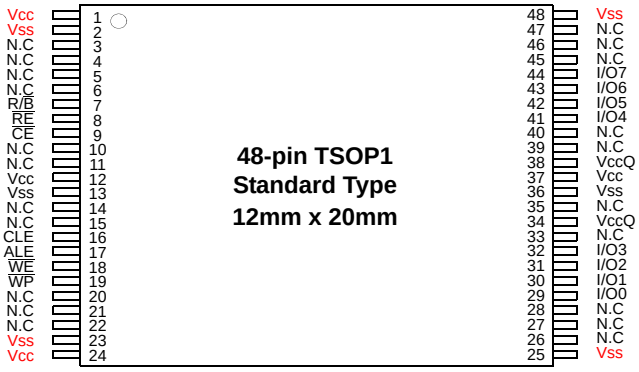

1.7.1 Package Dimensions

48-PIN LEAD FREE PLASTIC THIN SMALL OUT-LINE PACKAGE TYPE(I)

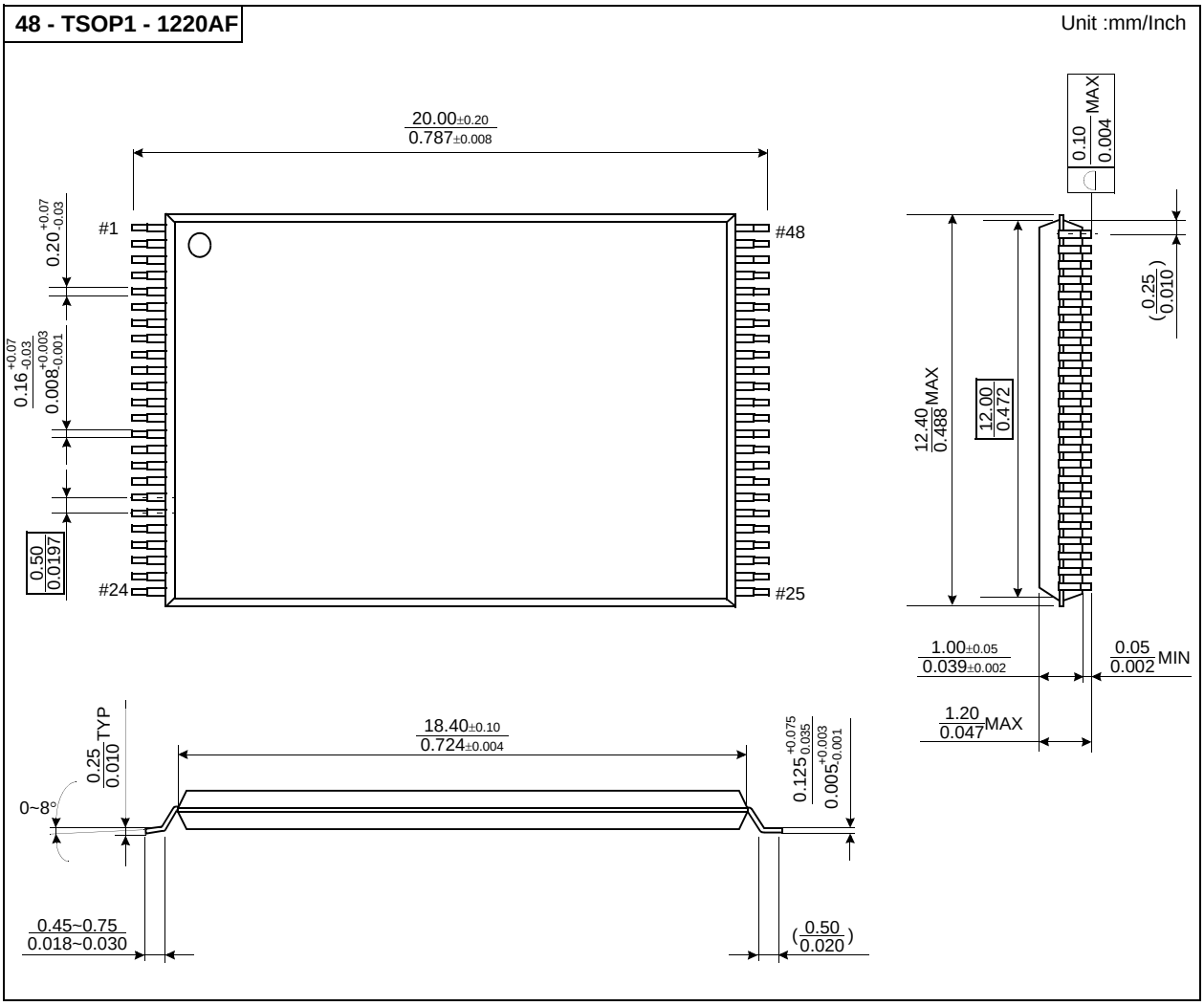

1.8 Pin Configuration (48TSOP, DDP)

K9LBG08U0A-SCB0/SIB0

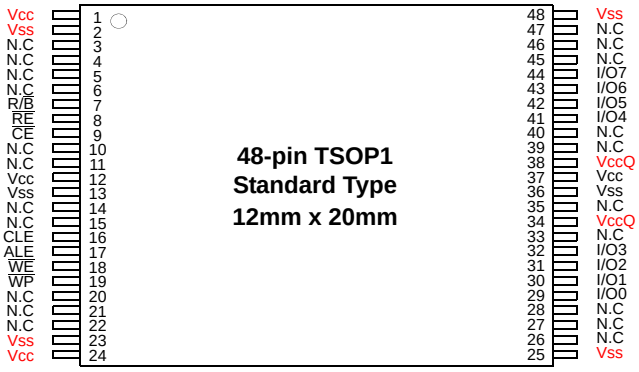

1.8.1 Package Dimensions

48-PIN LEAD/LEAD FREE PLASTIC THIN SMALL OUT-LINE PACKAGE TYPE(I)

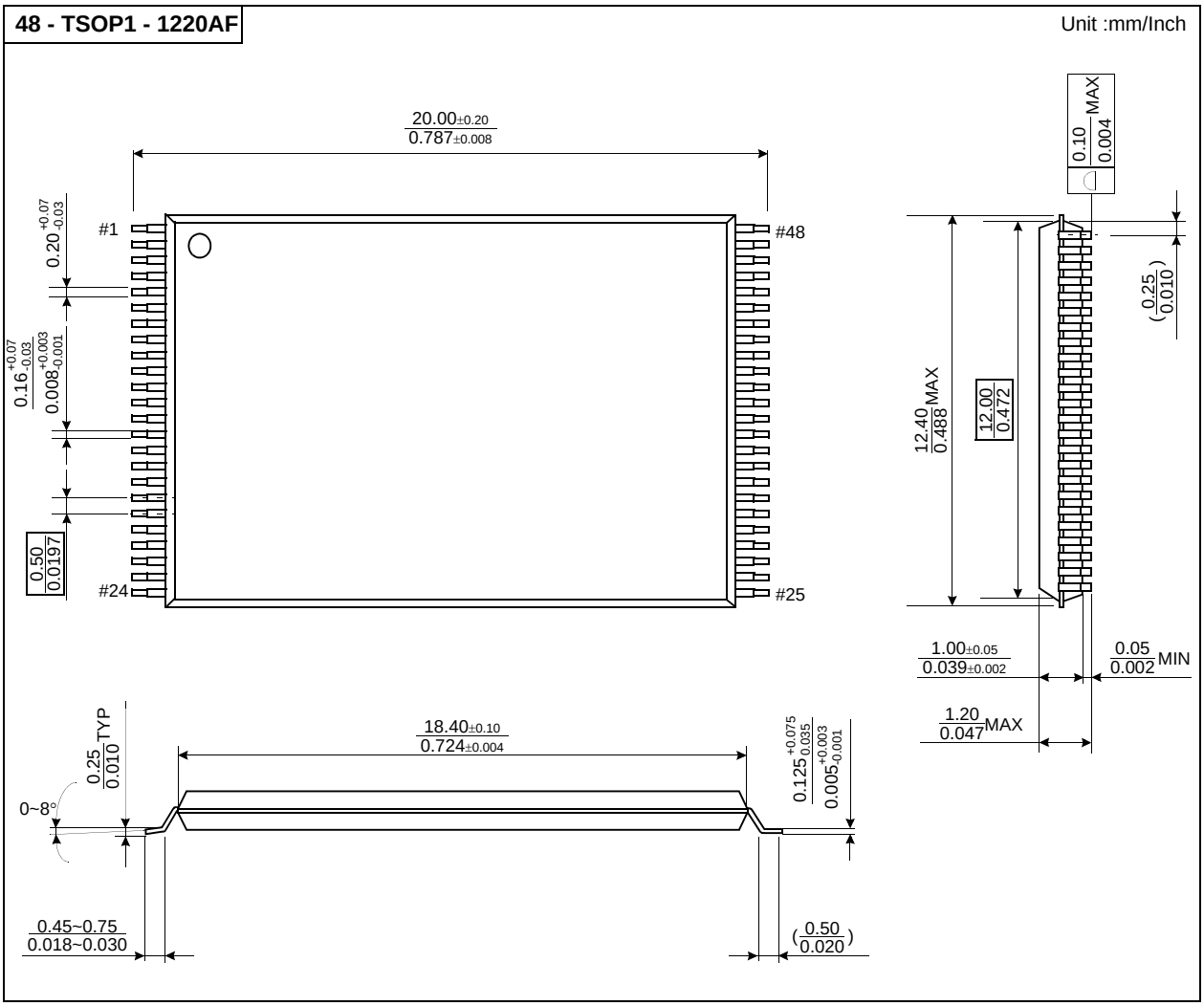

1.9 Pin Configuration (48TSOP, QDP)

K9HBG08U1A-SCB0/SIB0

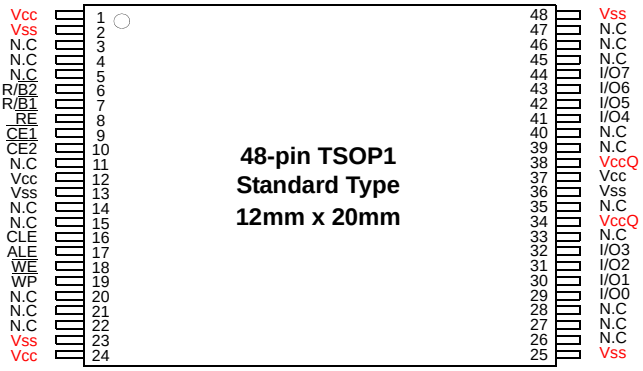

1.9.1 Package Dimensions

48-PIN LEAD/LEAD FREE PLASTIC THIN SMALL OUT-LINE PACKAGE TYPE(I)

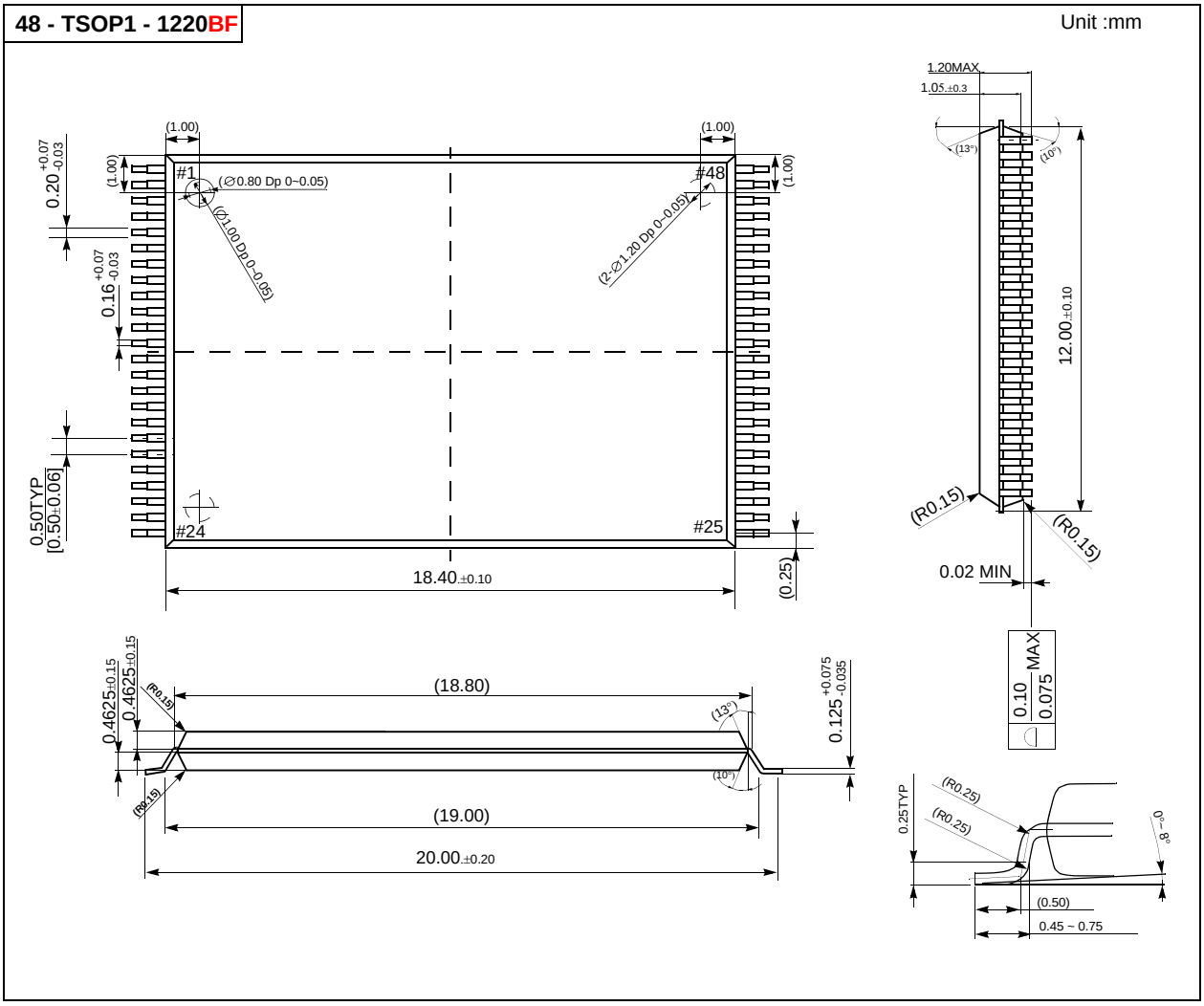

1.10 Pin Description

Pin Name	Pin Function
I/O_0 ~ I/O_7	**DATA INPUTS/OUTPUTS** The I/O pins are used to input command, address and data, and to output data during read operations. The I/O pins float to high-z when the chip is deselected or when the outputs are disabled.
CLE	**COMMAND LATCH ENABLE** The CLE input controls the activating path for commands sent to the command register. When active high, commands are latched into the command register through the I/O ports on the rising edge of the $\overline{WE}$ signal.
ALE	**ADDRESS LATCH ENABLE** The ALE input controls the activating path for address to the internal address registers. Addresses are latched on the rising edge of $\overline{WE}$ with ALE high.
$\overline{CE}$	**CHIP ENABLE** The $\overline{CE}$ input is the device selection control. When the device is in the Busy state, $\overline{CE}$ high is ignored, and the device does not return to standby mode in program or erase operation.
$\overline{RE}$	**READ ENABLE** The $\overline{RE}$ input is the serial data-out control, and when active drives the data onto the I/O bus. Data is valid tREA after the falling edge of $\overline{RE}$ which also increments the internal column address counter by one.
$\overline{WE}$	**WRITE ENABLE** The $\overline{WE}$ input controls writes to the I/O port. Commands, address and data are latched on the rising edge of the $\overline{WE}$ pulse.
$\overline{WP}$	**WRITE PROTECT** The $\overline{WP}$ pin provides inadvertent program/erase protection during power transitions. The internal high voltage generator is reset when the $\overline{WP}$ pin is active low.
R/$\overline{B}$	**READY/BUSY OUTPUT** The R/$\overline{B}$ output indicates the status of the device operation. When low, it indicates that a program, erase or random read operation is in process and returns to high state upon completion. It is an open drain output and does not float to high-z condition when the chip is deselected or when outputs are disabled.
Vcc	**POWER** Vcc is the power supply for device.
VccQ	**I/O POWER** The VccQ is the power supply for input and/or output signals.
Vss	**GROUND**
VssQ	**I/O GROUND** The VssQ is the power supply ground
N.C	**NO CONNECTION** Lead is not internally connected.

NOTE :
Connect all Vcc and Vss pins of each device to common power supply outputs.
Do not leave either Vcc or Vss disconnected.

The K9GBG08U0A has one $\overline{CE}$ pins($\overline{CE}$) and R/$\overline{B}$ pins(R/$\overline{B}$).
The K9LCG08U1A has two $\overline{CE}$ pins($\overline{CE}$1 to $\overline{CE}$2) and R/$\overline{B}$ pins(R/$\overline{B}$1 to R/$\overline{B}$2).
The K9HDG08U5A has four $\overline{CE}$ pins($\overline{CE}$1-1 to $\overline{CE}$2-2) and R/$\overline{B}$ pins(R/$\overline{B}$1-1 to R/$\overline{B}$2-2).

For K9HDG08X5A,
$\overline{CE}$1-1, $\overline{CE}$2-1 and R/$\overline{B}$1-1, R/$\overline{B}$2-1 are mapped to I/O0-1 ~ I/O7-1.
$\overline{CE}$1-2, $\overline{CE}$2-2 and R/$\overline{B}$1-2, R/$\overline{B}$2-2 are mapped to I/O0-2 ~ I/O7-2.

Functional Block Diagram

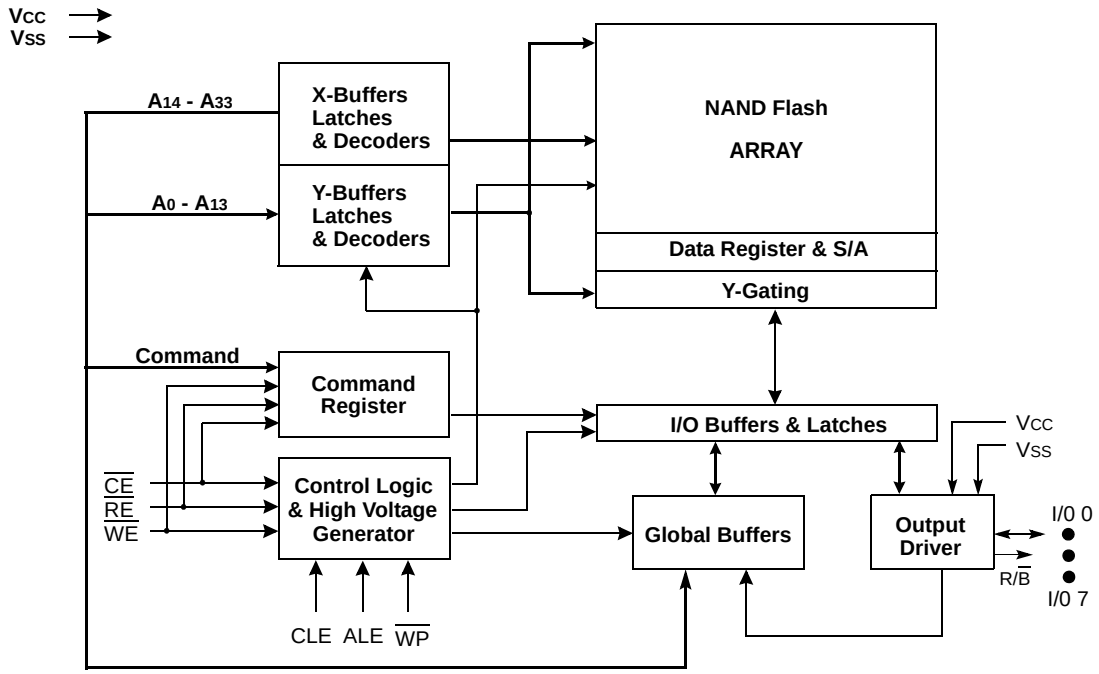

Array Organization of Single Die

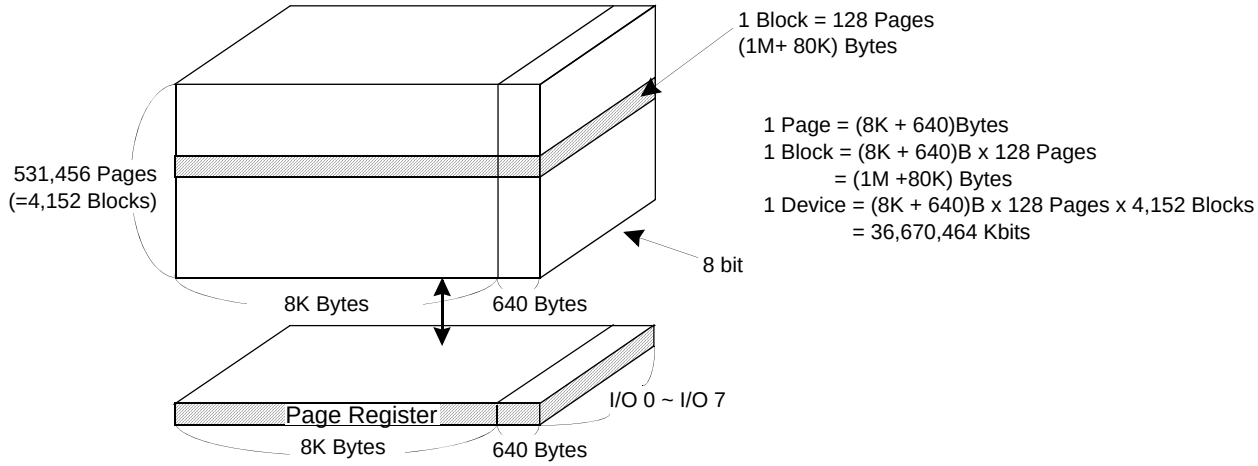

	I/O 0	I/O 1	I/O 2	I/O 3	I/O 4	I/O 5	I/O 6	I/O 7
1st Cycle	A0	A1	A2	A3	A4	A5	A6	A7
2nd Cycle	A8	A9	A10	A11	A12	A13	*L	*L
3rd Cycle	A14	A15	A16	A17	A18	A19	A20	A21
4th Cycle	A22	A23	A24	A25	A26	A27	A28	A29
5th Cycle	A30	A31	A32	A33	*L	*L	*L	*L

Column Address

Row Address;
Page Address : A14 ~ A20
Plane Address : A21
Block Address : A22 ~ A33

NOTE :

Column Address : Starting Address of the Register.

* L must be set to "Low".

* The device ignores any additional input of address cycles than required.

* Row Address consists of Page address (A14 ~ A20) & Plane address(A21) & Block address(A22 ~ the last address)

Spare Blocks Arrangement

The device has 56 spare blocks to increase valid blocks. Extended blocks can be accessed by the following address.

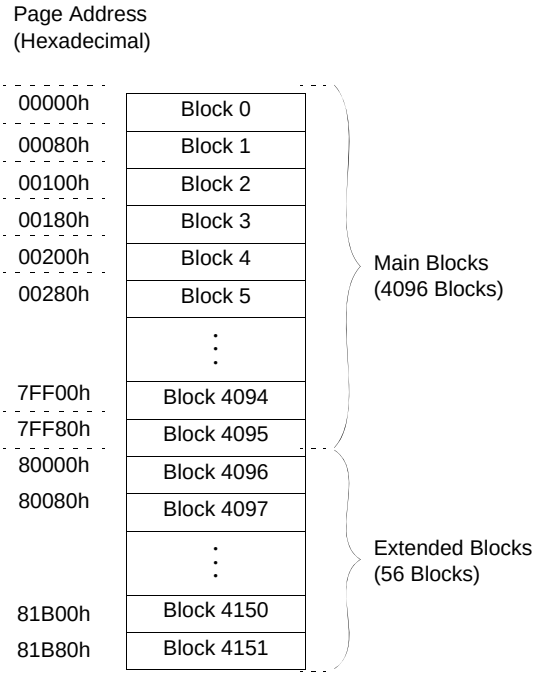

2.0 PRODUCT INTRODUCTION

NAND Flash Memory has addresses multiplexed into 8 I/Os. This scheme dramatically reduces pin counts and allows system upgrades to future densities by maintaining consistency in system board design. Command, address and data are all written through I/O's by bringing $\overline{WE}$ to low while $\overline{CE}$ is low. Those are latched on the rising edge of $\overline{WE}$. Command Latch Enable(CLE) and Address Latch Enable(ALE) are used to multiplex command and address respectively, via the I/O pins. Some commands require one bus cycle. For example, Reset Command, Status Read Command, etc. require just one cycle bus. Some other commands, like page read and block erase and page program, require two cycles: one cycle for setup and the other cycle for execution. Page Read and Page Program need the same five address cycles following the required command input. In Block Erase operation, however, only the three row address cycles are used. Device operations are selected by writing specific commands into the command register. The table below defines the specific commands of the K9XXG08UXA.

Command Sets

Function	1st Set	2nd Set	Acceptable Command during busy
Read	00h	30h	
Read for Copy-Back	00h	35h	
Intelligent Copy-Back Read	00h	3Ah	
Cache Read	31h	-	
Read Start for Last Page Cache Read	3Fh	-	
Page Program	80h	10h	
Cache Program	80h	15h	
Copy-Back Program	85h	10h	
Intelligent Copy-Back Program	8Ch	15h	
Block Erase	60h	D0h	
Random Data Input(1)	85h	-	
Random Data Output(1)	05h	E0h	
Two-Plane Read (3)	60h----60h	30h	
Two-Plane Read for Copy-Back(3)	60h----60h	35h	
Two-Plane Intelligent Copy-Back Read	60h----60h	3Ah	
Two-Plane Random Data Output (1) (3)	00h----05h	E0h	
Two-Plane Cache Read(3)	60h----60h	33h	
Two-Plane Page Program(2)	80h----11h	81h----10h	
Two-Plane Copy-Back Program(2)	85h----11h	81h----10h	
Two-Plane Intelligent Copy-Back Program	8Ch----11h	8Ch----15h	
Two-Plane Cache Program(2)	80h----11h	81h----15h	
Two-Plane Block Erase	60h----60h	D0h	
Read ID	90h	-	
Read Status	70h	-	O
Read Status1	F1h	-	O
Set Feature	EFh	-	
Get Feature	EEh	-	
Reset	FFh	-	O

NOTE :

1) Random Data Input/Output can be executed in a page.

2) Any command between 11h and 80h/81h/85h is prohibited except 70h/F1h and FFh.

3) Two-Plane Random Data out must be used after Two-Plane Read or Two-Plane Cache Read operation

Caution :

Any undefined command inputs are prohibited except for above command set.

2.1 Absolute Maximum Ratings

Parameter		Symbol		Rating	Unit
Voltage on any pin relative to V_{SS}		V_{CC}		-0.6 to +4.6	V
		V_{IN}	VccQ=3.3V	-0.6 to +4.6	
		$V_{I/O}$	VccQ=3.3V	-0.6 to +4.6	
Storage Temperature	K9XXG08XXA-XCB0/XIB0	T_{STG}		-65 to +100	°C
Short Circuit Current		Ios		5	mA

NOTE :
1) Minimum DC voltage is -0.6V on input/output pins. During transitions, this level may undershoot to -2.0V for periods <30ns.
Maximum DC voltage on input/output pins is VCC+0.3V which, during transitions, may overshoot to VCC+2.0V for periods <20ns.
2) Permanent device damage may occur if ABSOLUTE MAXIMUM RATINGS are exceeded. Functional operation should be restricted to the conditions as detailed in the operational sections of this data sheet. Exposure to absolute maximum rating conditions for extended periods may affect reliability.

2.2 Recommended Operating Conditions

(Voltage reference to GND, K9XXG08UXA-XCB0 :T_A=0 to 70°C(1), K9XXG08UXA-XIB :vT_A=-40 to 85°C(1))

Parameter	Symbol	Min	Typ.	Max	Unit
Supply Voltage	V_{CC}	2.7	3.3	3.6	V
Supply Voltage	V_{SS}	0	0	0	
I/O Voltage	VccQ(3.3V)	2.7	3.3	3.6	
I/O Voltage	VssQ	0	0	0	

NOTE:
1) Data retention is not guaranteed on the operating condition temperature under/over.

2.3 DC And Operating Characteristics(Recommended operating conditions otherwise noted.)

Parameter		Symbol	Test Conditions	VccQ=3.3V			Unit
				Min	Typ	Max	
Operating Current	Page Read with Serial Access	I_{CC1}	tRC=25ns $\overline{CE}$=V_{IL}, I_{OUT}=0mA	-	30	50	mA
	Program	I_{CC2}	-				
	Erase	I_{CC3}	-				
Stand-by Current(CMOS)		I_{SB}(1)	$\overline{CE}$=VccQ-0.2, $\overline{WP}$=0V/VccQ	-	10	50	µA
Input Leakage Current		I_{LI}(2)	V_{IN}=0 to VccQ(max)	-	-	±10	
Output Leakage Current		I_{LO}(2)	V_{OUT}=0 to VccQ(max)	-	-	±10	
Input High Voltage		V_{IH}(3)	-	0.8 xVccQ	-	VccQ +0.3	V
Input Low Voltage, All inputs		V_{IL}(3)	-	-0.3	-	0.2 xVccQ	
Output High Voltage Level		V_{OH}	I_{OH}=-400µA	2.4	-	-	
Output Low Voltage Level		V_{OL}	I_{OL}=2.1mA	-	-	0.4	
Output Low Current(R/$\overline{B}$)		I_{OL}(R/$\overline{B}$)	V_{OL}=0.4V	8	10	-	mA

NOTE :
1) The typical value of the K9LCG08U1A's I_{SB} is 20µA and the maximum value is 100µA.
The typical value of the K9HDG08U5A's I_{SB} is 40µA and the maximum value is 200µA.
2) The maximum value of K9HDG08U5A's are ±20µA.
3) VIL can undershoot to -0.4V and VIH can overshoot to VCC +0.4V for durations of 20 ns or less.
4) Typical value is measured at Vcc=3.3V, TA=25°C. Not 100% tested.

2.4 Valid Block

Parameter	Symbol	Min	Typ.	Max	Unit
K9GBG08U0A	N_{VB}	4,036	-	4,152	Blocks
K9LCG08U1A		8,072		8,304	
K9HDG08U5A		16,144		16,608	

NOTE :
1) The device may include initial invalid blocks when first shipped. Additional invalid blocks may develop while being used. The number of valid blocks is presented with both cases of invalid blocks considered. Invalid blocks are defined as blocks that contain one or more bad bits which cause status failure during program and erase operation. Do not erase or program factory-marked bad blocks. Refer to the attached technical notes for appropriate management of invalid blocks.
2) The 1st block, which is placed on 00h block address, is guaranteed to be a valid block at the time of shipment
3) The number of valid blocks is on the basis of single plane operations, and this may be decreased with two plane operations.
* Each Single die in K9LCG08U1A and K9HDG08U5A has maximum 116 invalid blocks.

2.5 AC Test Condition

(K9XXG08UXA-XCB0 : T_A=0 to 70°C, K9XXG08UXA: Vcc=2.7V ~ 3.3V,unless otherwise noted)

Parameter	K9XXG08UXA
Input Pulse Levels	0V to Vcc
Input Rise and Fall Times	5ns
Input and Output Timing Levels	Vcc/2
Output Load	1 TTL GATE and CL = 5pF

2.6 Capacitance(T_A=25°C, V_{CC}=3.3V, f=100MHz)

Item	Symbol	Test Condition	K9GBG08U0A K9LCG08U1A		K9HDG08U5A		Unit
			Min	Max	Min	Max	
Input/Output Capacitance	$C_{I/O}$	V_{IL}=0V	-	8	-	13	pF
	$C_{I/O(W)}$*	V_{IL}=0V	-	5	-	10	pF
Input Capacitance	C_{IN}	V_{IN}=0V	-	8	-	13	pF
	$C_{IN(W)}$*	V_{IN}=0V	-	5	-	10	pF

NOTE :
1) Capacitance is periodically sampled and not 100% tested.
2) CI/O(W) and CIN(W) are tested at wafer level.

2.7 Mode Selection

CLE	ALE	$\overline{CE}$	$\overline{WE}$	$\overline{RE}$	$\overline{WP}$	Mode	
H	L	L		H	X	Read Mode	Command Input
L	H	L		H	X		Address Input(5clock)
H	L	L		H	H	Write Mode	Command Input
L	H	L		H	H		Address Input(5clock)
L	L	L		H	H	Data Input	
L	L	L	H		X	Data Output	
X	X	X	X	H	X	During Read(Busy)	
X	X	X	X	X	H	During Program(Busy)	
X	X	X	X	X	H	During Erase(Busy)	
X	X(1)	X	X	X	L	Write Protect	
X	X	H	X	X	0V/Vcc(2)	Stand-by	

NOTE :
1) X can be VIL or VIH.
2) $\overline{WP}$ should be biased to CMOS high or CMOS low for standby.

2.8 Program/Erase Characteristics

Parameter	Symbol	Min	Typ	Max	Unit
Program Time	tPROG	-	1.3	5	ms
Dummy Busy Time for Two-Plane Program	tDBSY	-	0.5	1	μs
Dummy Busy Time for Cache Program	tCBSY(4)	-	-	5	ms
Dummy Busy Time for Intelligent Copy-Back Program	tCBSY2(4)	-	-	500	μs
Number of Partial Program Cycles in the Same Page	Nop	-	-	1	cycle
Block Erase Time	tBERS	-	1.5	10	ms

NOTE :
1) Typical program time is measured at Vcc=3.3V, TA=25°C. Not 100% tested.
2) Typical Program time is defined as the time within which more than 50% of the whole pages are programmed at 3.3V Vcc and 25°C temperature.
3) Within a same block, program time(tPROG) of page group A is faster than that of page group B. Typical tPROG is the average program time of the page group A and B.
   Page Group A: Page 0, 1, 3, 5, 7, 9, 11, ... ,115, 117, 119, 121, 123, 125
   Page Group B: Page 2, 4, 6, 8, 10, 12, ... , 118, 120, 122, 124, 126, 127
4) tCBSY and tCBSY2 depend on the timing between internal programming time and data in time.

2.9 AC Timing Characteristics for Command / Address / Data Input

Parameter	Symbol	Min	Max	Unit
CLE Setup Time	tCLS(1)	12	-	ns
CLE Hold Time	tCLH	5	-	ns
$\overline{CE}$ Setup Time	tCS(1)	20	-	ns
$\overline{CE}$ Hold Time	tCH	5	-	ns
$\overline{WE}$ Pulse Width	tWP	12	-	ns
ALE Setup Time	tALS(1)	12	-	ns
ALE Hold Time	tALH	5	-	ns
Data Setup Time	tDS(1)	12	-	ns
Data Hold Time	tDH	5	-	ns
Write Cycle Time	tWC	25	-	ns
$\overline{WE}$ High Hold Time	tWH	10	-	ns
Address to Data Loading Time	tADL(2)	300	-	ns

NOTE :
1) The transition of the corresponding control pins must occur only once while $\overline{WE}$ is held low.
2) tADL is the time from the $\overline{WE}$ rising edge of final address cycle to the $\overline{WE}$ rising edge of first data cycle.

2.10 AC Characteristics for Operation

Parameter	Symbol	Min	Max	Unit
ALE to $\overline{RE}$ Delay	tAR	10	-	ns
CLE to $\overline{RE}$ Delay	tCLR	10	-	ns
Command Write cycle to Address Write cycle Time for Random data input	tCWAW	300	-	ns
Ready to $\overline{RE}$ Low	tRR	20	-	ns
$\overline{RE}$ Pulse Width	tRP	12	-	ns
$\overline{WE}$ High to Busy	tWB	-	100	ns
$\overline{WP}$ High/Low to $\overline{WE}$ Low	tWW	100	-	ns
Read Cycle Time	tRC	25	-	ns
$\overline{RE}$ Access Time	tREA	-	20	ns
$\overline{CE}$ Access Time	tCEA	-	25	ns
$\overline{RE}$ High to Output Hi-Z	tRHZ	-	100	ns
$\overline{CE}$ High to Output Hi-Z	tCHZ	-	30	ns
$\overline{CE}$ High to ALE or CLE Don't Care	tCSD	0	-	ns
$\overline{RE}$ High to Output Hold	tRHOH	15	-	ns
$\overline{RE}$ Low to Output Hold	tRLOH	5	-	ns
$\overline{RE}$ High Hold Time	tREH	10	-	ns
Output Hi-Z to $\overline{RE}$ Low	tIR	0	-	ns
$\overline{RE}$ High to $\overline{WE}$ Low	tRHW	100	-	ns
$\overline{WE}$ High to $\overline{RE}$ Low	tWHR	120	-	ns
$\overline{WE}$ High to $\overline{RE}$ Low for Random data out	tWHR2	300	-	ns
Device Resetting Time(Read/Program/Erase)	tRST	-	10/30/100(1)	µs
Busy time for Set Feature and Get Feature	tFEAT	-	1	µs
Cache Busy in Read Cache (following 31h and 3Fh)	tDCBSYR	-	90(2)	µs
Dummy Busy Time for Intelligent Copy-Back Read	tDCBSYR2	-	5	ms

NOTE :
1) If reset command(FFh) is written at Ready state, the device goes into Busy for maximum 10µs.
2) 90us is applied for the average maximum value.

3.0 NAND Flash Technical Notes

3.1 Initial Invalid Block(s)

Initial invalid blocks are defined as blocks that contain one or more initial invalid bits whose reliability is not guaranteed by Samsung. The information regarding the initial invalid block(s) is called the initial invalid block information. Devices with initial invalid block(s) have the same quality level as devices with all valid blocks and have the same AC and DC characteristics. An initial invalid block(s) does not affect the performance of valid block(s) because it is isolated from the bit line and the common source line by a select transistor. The system design must be able to mask out the initial invalid block(s) via address mapping. The 1st block, which is placed on 00h block address, is guaranteed to be a valid block at the time of shipment.

3.2 Identifying Initial Invalid Block(s)

All device locations are erased(FFh) except locations where the initial invalid block(s) information is written prior to shipping. The initial invalid block(s) status is defined by the 1st byte in the spare area. Samsung makes sure that the first or the last page of every initial invalid block has non-FFh data at the column address of 0 or 8,192.The initial invalid block information is also erasable in most cases, and it is impossible to recover the information once it has been erased. Therefore, the system must be able to recognize the initial invalid block(s) based on the initial invalid block information and create the initial invalid block table via the following suggested flow chart. Any intentional erasure of the initial invalid block information is prohibited.

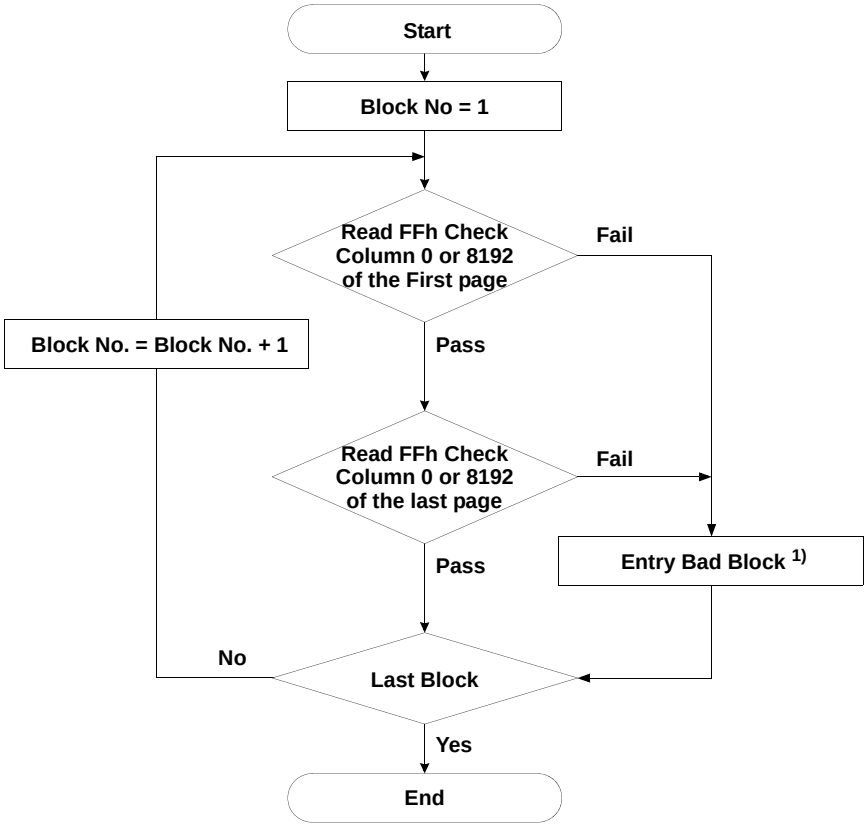

Flow chart to create initial invalid block table.

NOTE:
1) No erase operation is allowed to detected bad blocks.

3.3 Error in write or read operation

Within its life time, additional invalid blocks may develop with NAND Flash memory. Refer to the qualification report for the actual data. Block replacement should be done upon erase or program error.

Failure Mode		Detection and Countermeasure sequence
Write	Erase Failure	Status Read after Erase --> Block Replacement
	Program Failure	Status Read after Program --> Block Replacement
Read	Up to 40 Bit Failure	Verify ECC -> ECC Correction

Note) Users are required to employ randomizer function in the NAND controller to meet target endurance of the device.

ECC : Error Correcting Code --> RS Code or BCH Code etc.
Example) 40 bit correction / (1K+80) byte

Program Flow Chart

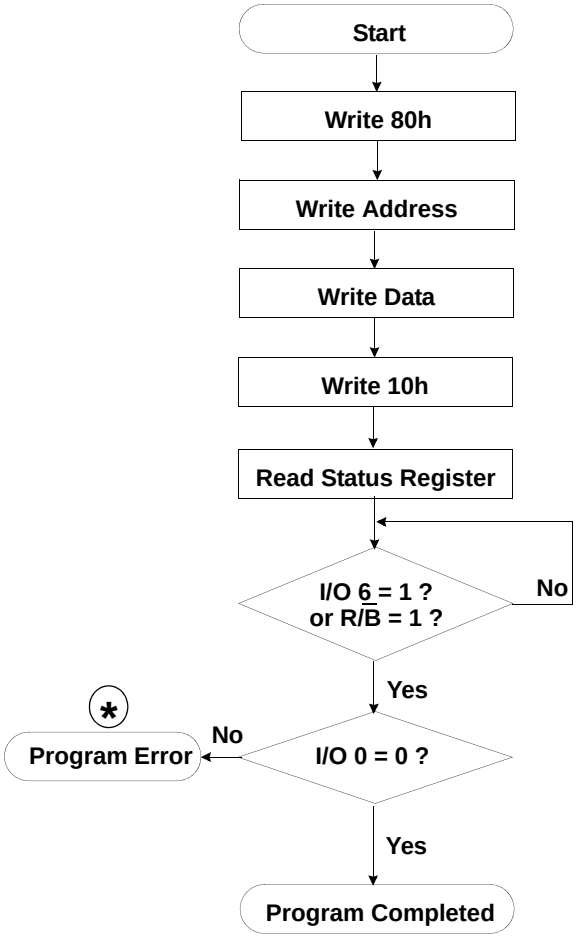

* : If program operation results in an error, map out the block including the page in error and copy the target data to another block.

NAND Flash Technical Notes *(Continued)*

Erase Flow Chart

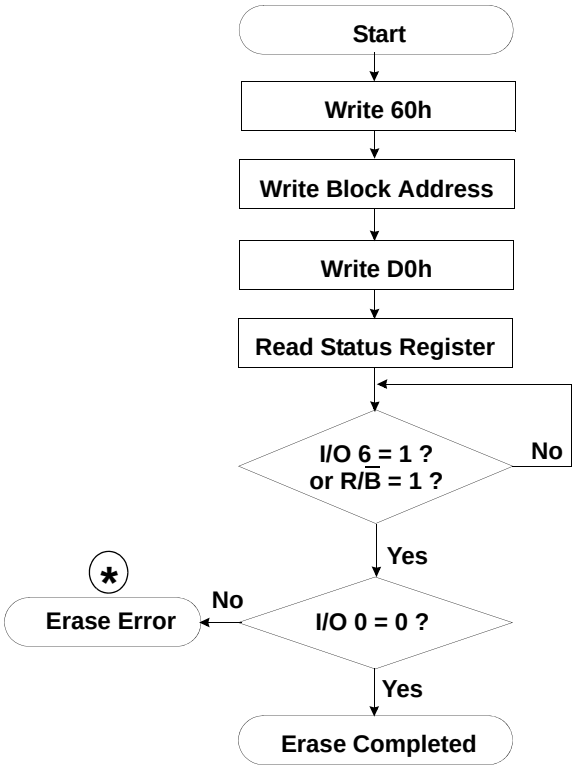

Read Flow Chart

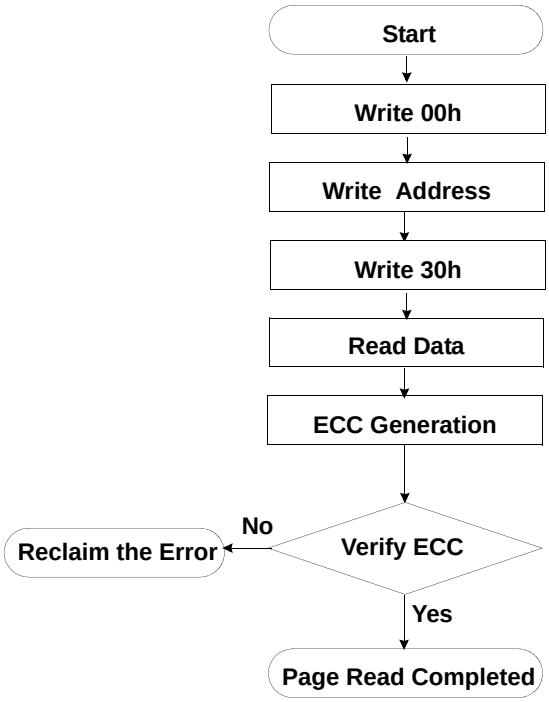

(*) : If erase operation results in an error, map out the failing block and replace it with another block.

Block Replacement

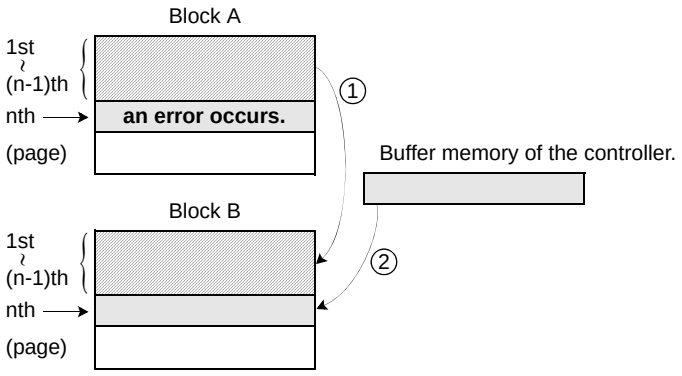

* Step1
When an error happens in the nth page of the Block 'A' during erase or program operation.
* Step2
Copy the data in the 1st ~ (n-1)th page to the same location of another free block. (Block 'B')
* Step3
Then, copy the nth page data of the Block 'A' in the buffer memory to the nth page of the Block 'B'.
* Step4
Do not erase or program Block 'A' by creating an 'invalid block' table or other appropriate scheme.

3.4 Addressing for program operation

Within a block, the pages must be programmed consecutively from the LSB (least significant bit) page of the block to MSB (most significant bit) pages of the block. Random page address programming is prohibited. In this case, the definition of LSB page is the LSB among the pages to be programmed. Therefore, LSB doesn't need to be page 0.

Paired page in 'Group A' must has been programmed before page in 'Group B' program execution.

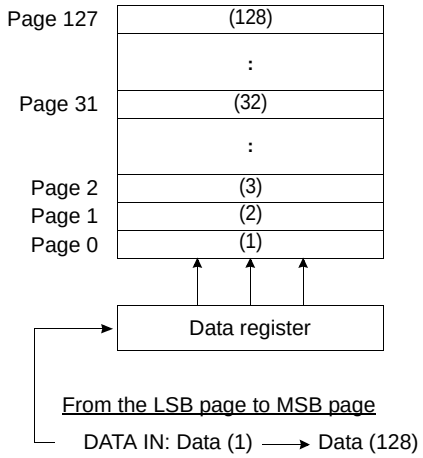

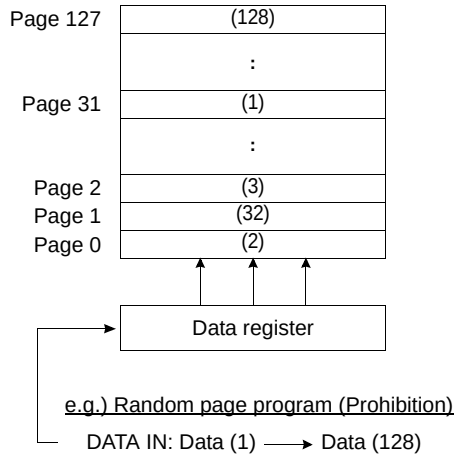

Paired Page Address Information

Paired Page Address(1/2)	
Group A	Group B
00h	02h
01h	04h
03h	06h
05h	08h
07h	0Ah
09h	0Ch
0Bh	0Eh
0Dh	10h
0Fh	12h
11h	14h
13h	16h
15h	18h
17h	1Ah
19h	1Ch
1Bh	1Eh
1Dh	20h
1Fh	22h
21h	24h
23h	26h
25h	28h
27h	2Ah
29h	2Ch
2Bh	2Eh
2Dh	30h
2Fh	32h
31h	34h
33h	36h
35h	38h
37h	3Ah
39h	3Ch
3Bh	3Eh
3Dh	40h

Paired Page Address(2/2)	
Group A	Group B
3Fh	42h
41h	44h
43h	46h
45h	48h
47h	4Ah
49h	4Ch
4Bh	4Eh
4Dh	50h
4Fh	52h
51h	54h
53h	56h
55h	58h
57h	5Ah
59h	5Ch
5Bh	5Eh
5Dh	60h
5Fh	62h
61h	64h
63h	66h
65h	68h
67h	6Ah
69h	6Ch
6Bh	6Eh
6Dh	70h
6Fh	72h
71h	74h
73h	76h
75h	78h
77h	7Ah
79h	7Ch
7Bh	7Eh
7Dh	7Fh

NOTE :
When program operation is abnormally aborted (e.g. power-down, reset), not only page data under program but also paired page data may be damaged.

3.5 System Interface Using $\overline{CE}$ don't-care.

For an easier system interface, $\overline{CE}$ may be inactive during the data-loading or serial access as shown below. The internal 8,832byte data registers are utilized as separate buffers for this operation and the system design gets more flexible. In addition, for voice or audio applications which use slow cycle time on the order of μ-seconds, de-activating $\overline{CE}$ during the data-loading and serial access would provide significant savings in power consumption.

Program Operation with $\overline{CE}$ don't-care

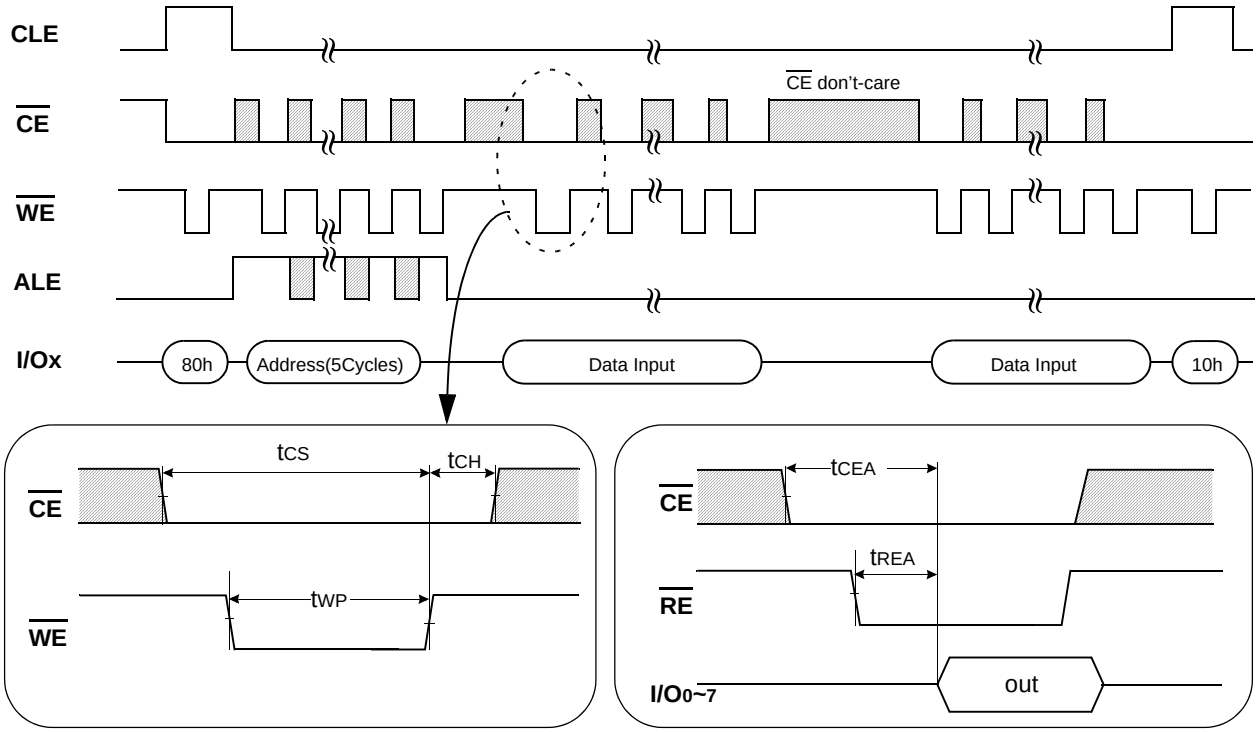

Read Operation with $\overline{CE}$ don't-care

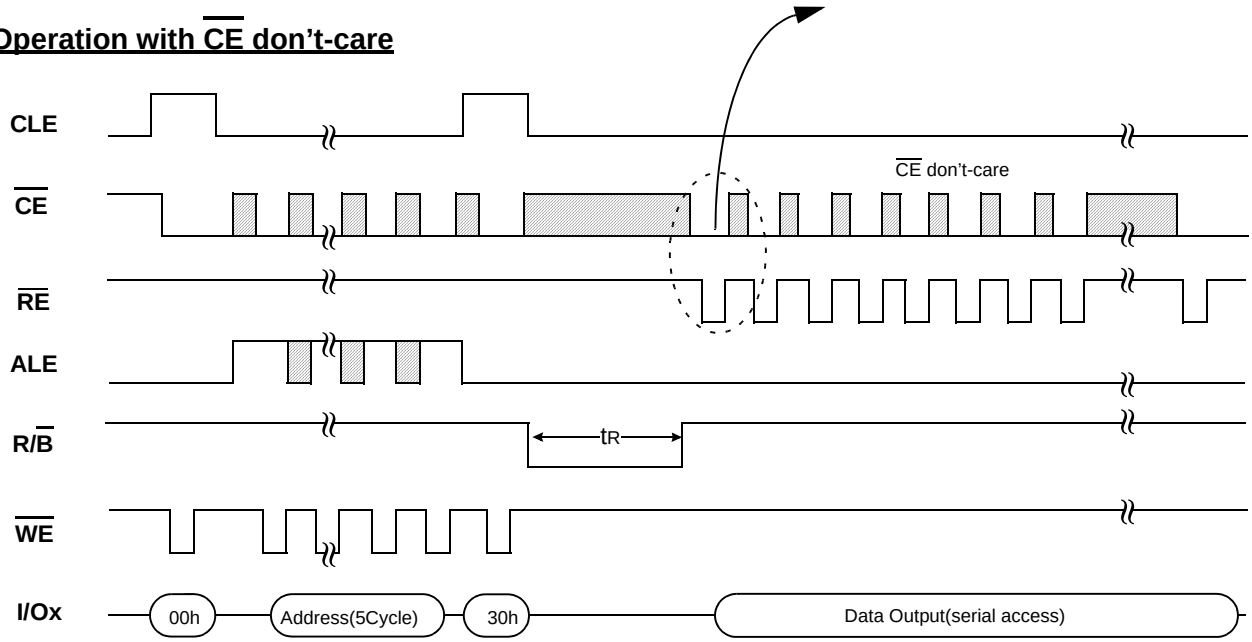

4.0 TIMING DIAGRAMS

4.1 Command Latch Cycle

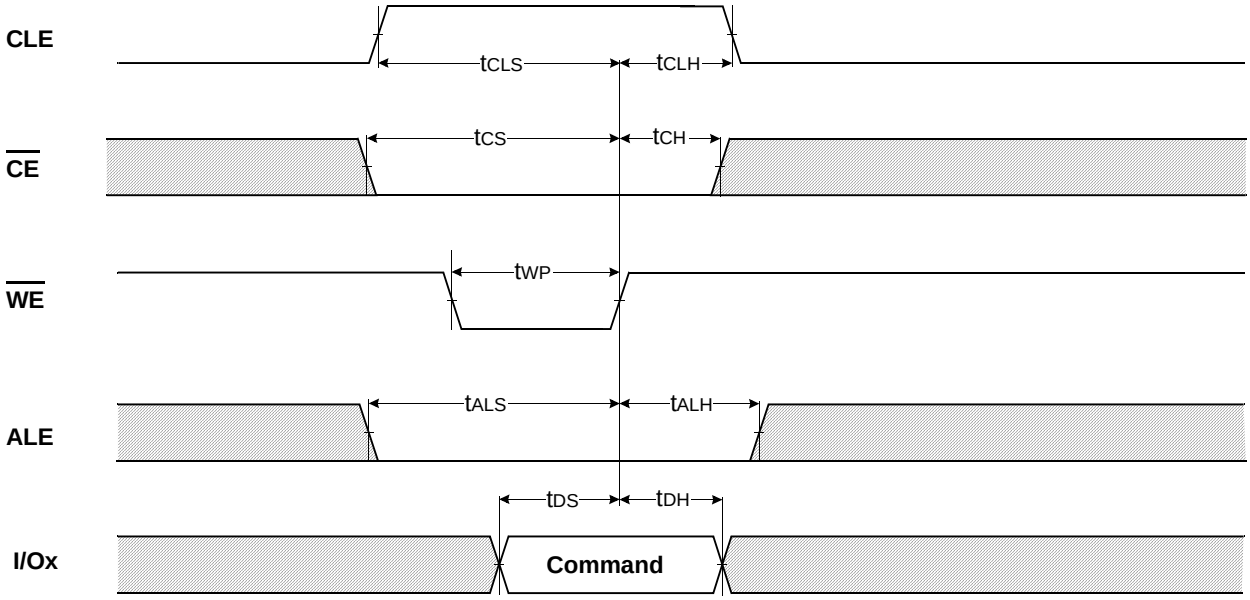

4.2 Address Latch Cycle

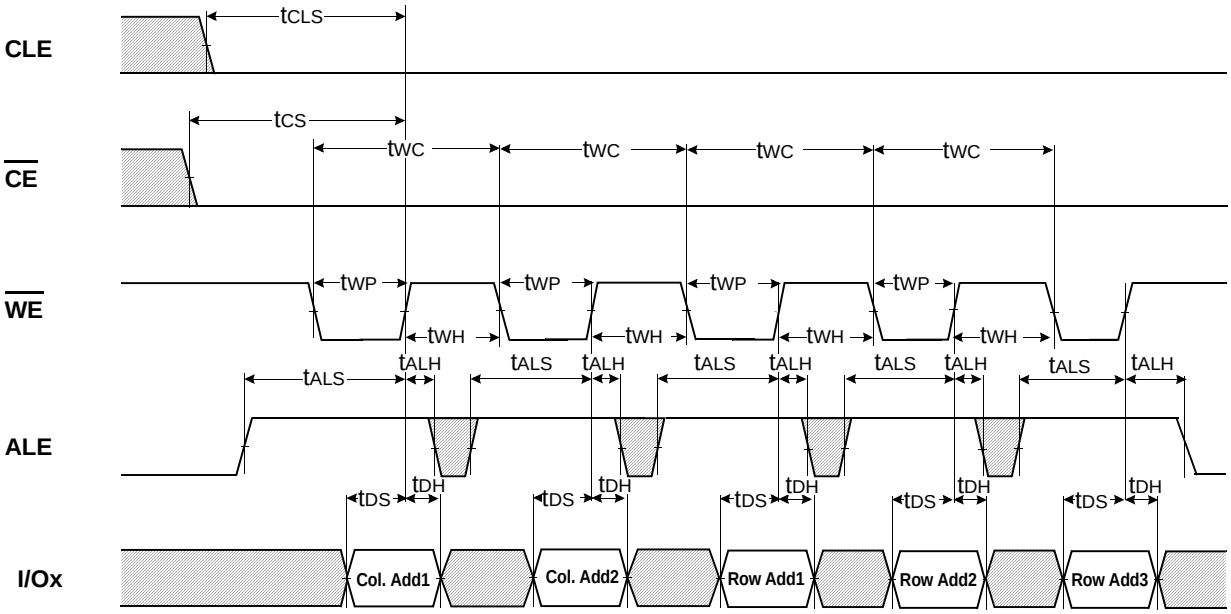

4.3 Input Data Latch Cycle

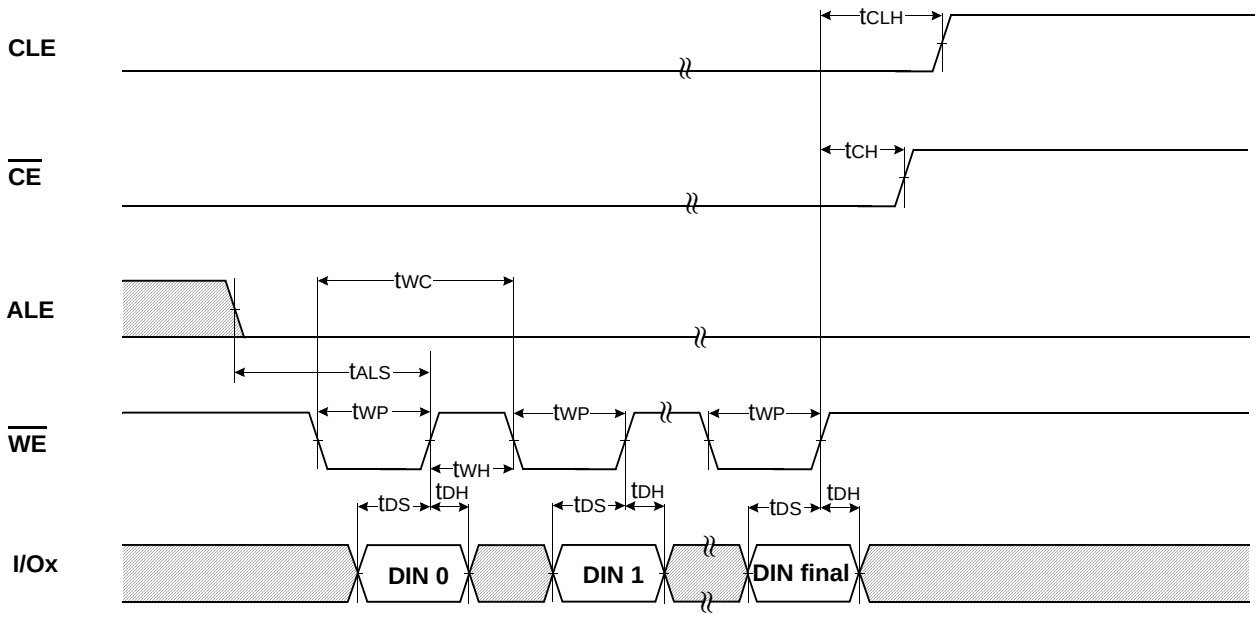

4.4 * Serial Access Cycle after Read(CLE=L, WE=H, ALE=L)

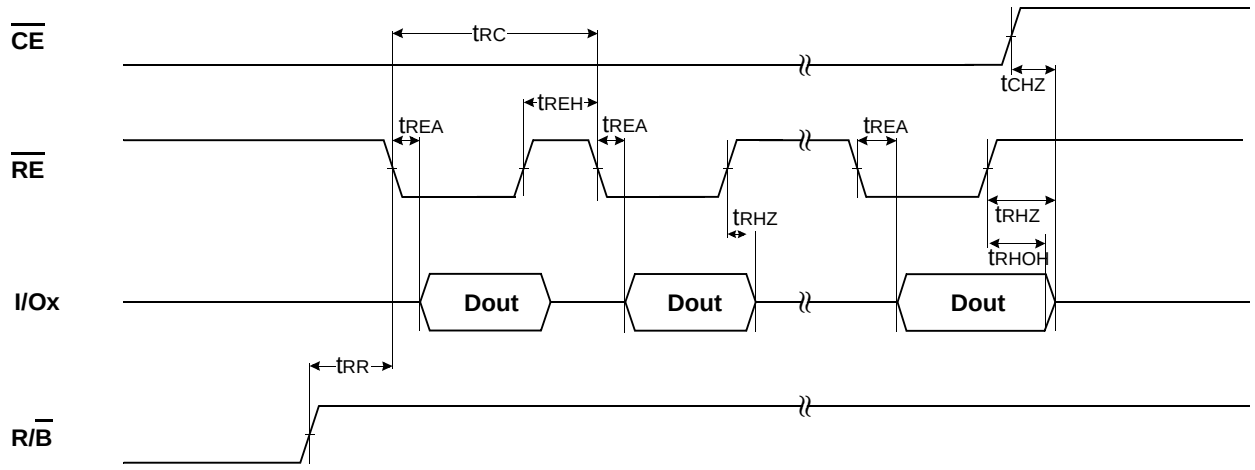

NOTE :
1) Transition is measured at ±200mV from steady state voltage with load.
This parameter is sampled and not 100% tested.
2) tRLOH is valid when frequency is higher than 20MHz.
tRHOH starts to be valid when frequency is lower than 20MHz.

4.5 Serial Access Cycle after Read(EDO Type, CLE=L, $\overline{WE}$=H, ALE=L)

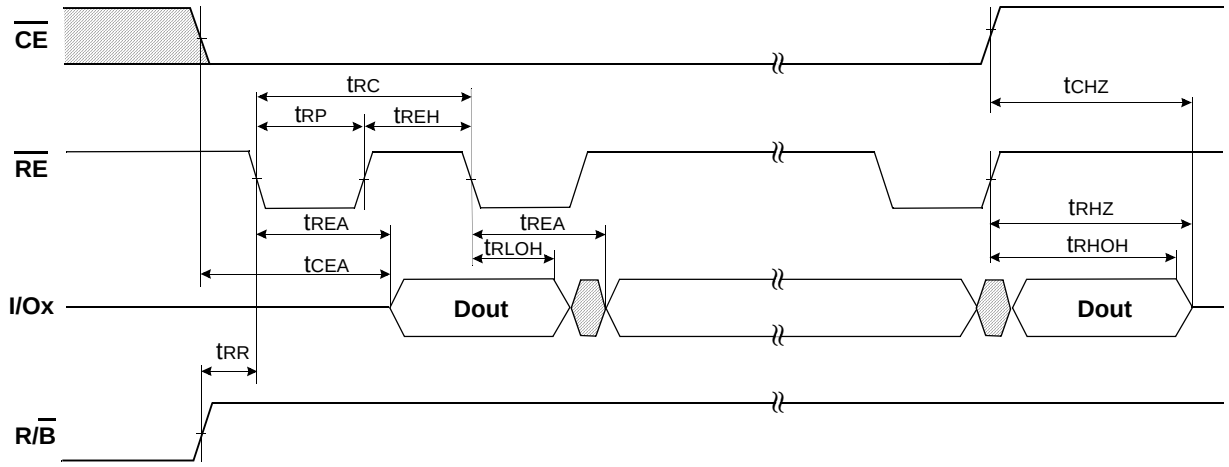

NOTE :
1) Transition is measured at ±200mV from steady state voltage with load.
This parameter is sampled and not 100% tested.
2) tRLOH is valid when frequency is higher than 20MHz.
tRHOH starts to be valid when frequency is lower than 20MHz.

4.6 Status Read Cycle

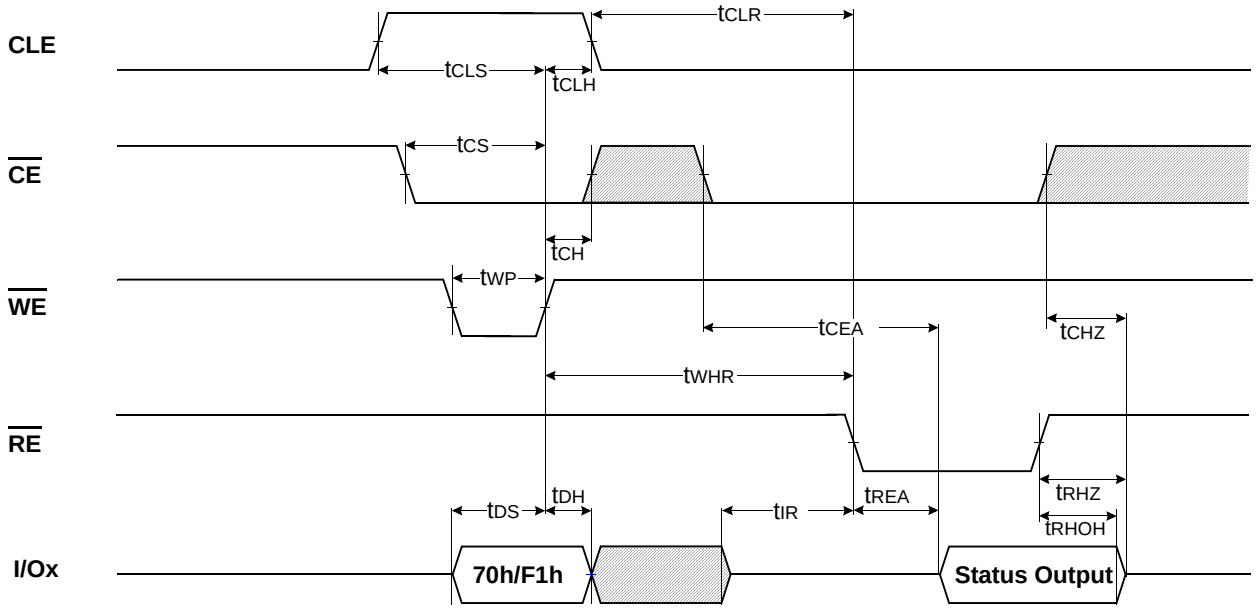

4.7 Read Operation

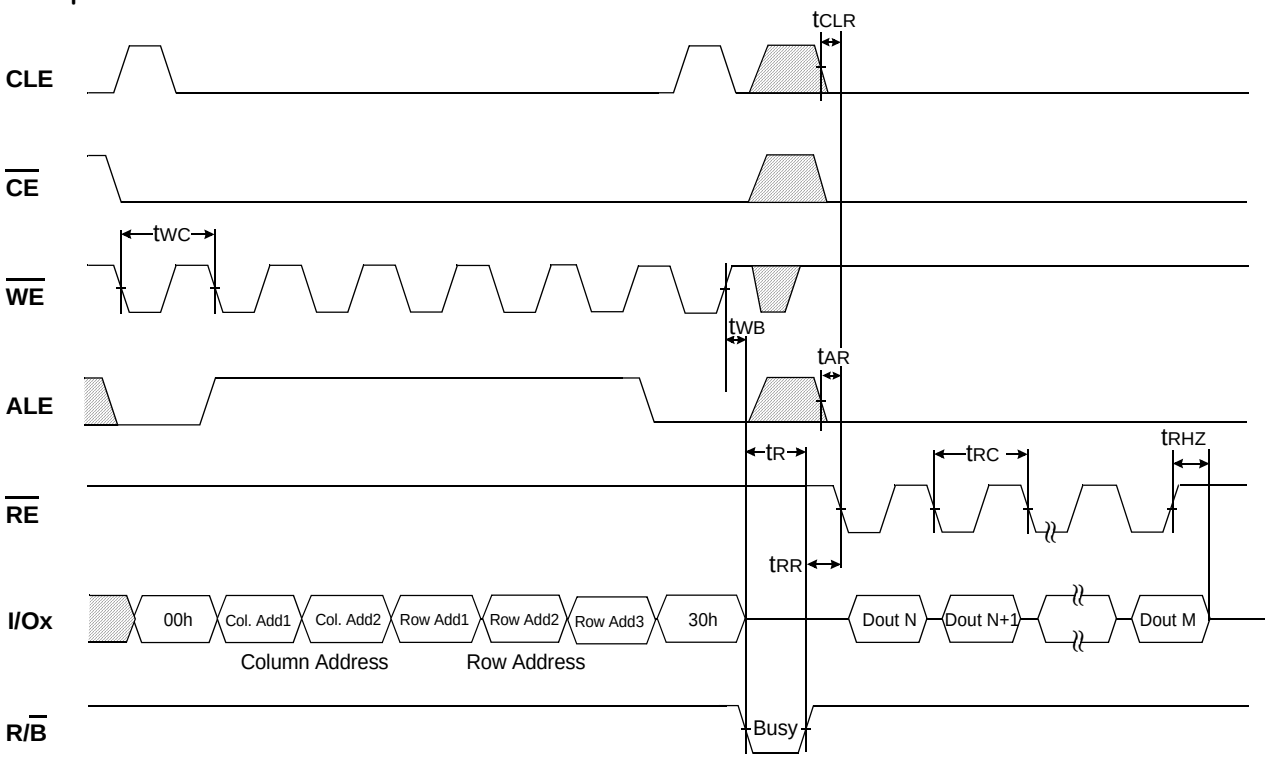

4.8 Read Operation(Intercepted by CE)

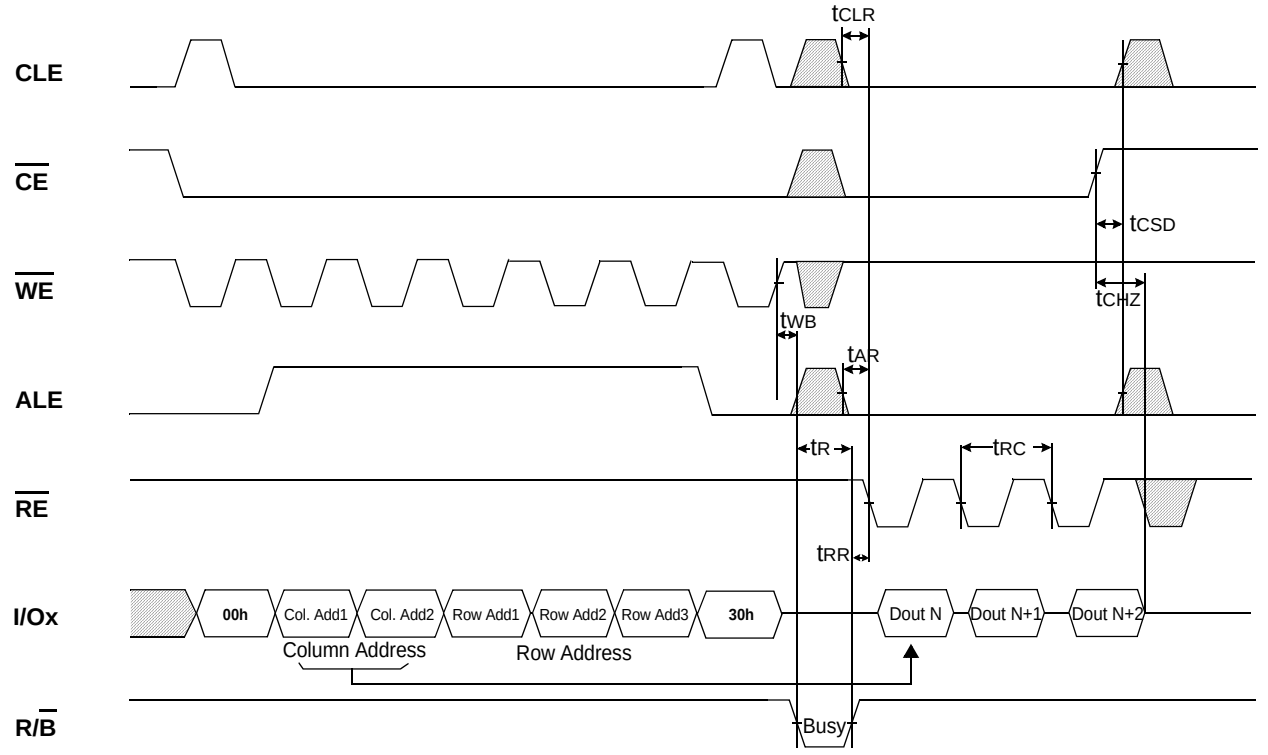

4.9 Random Data Output In a Page

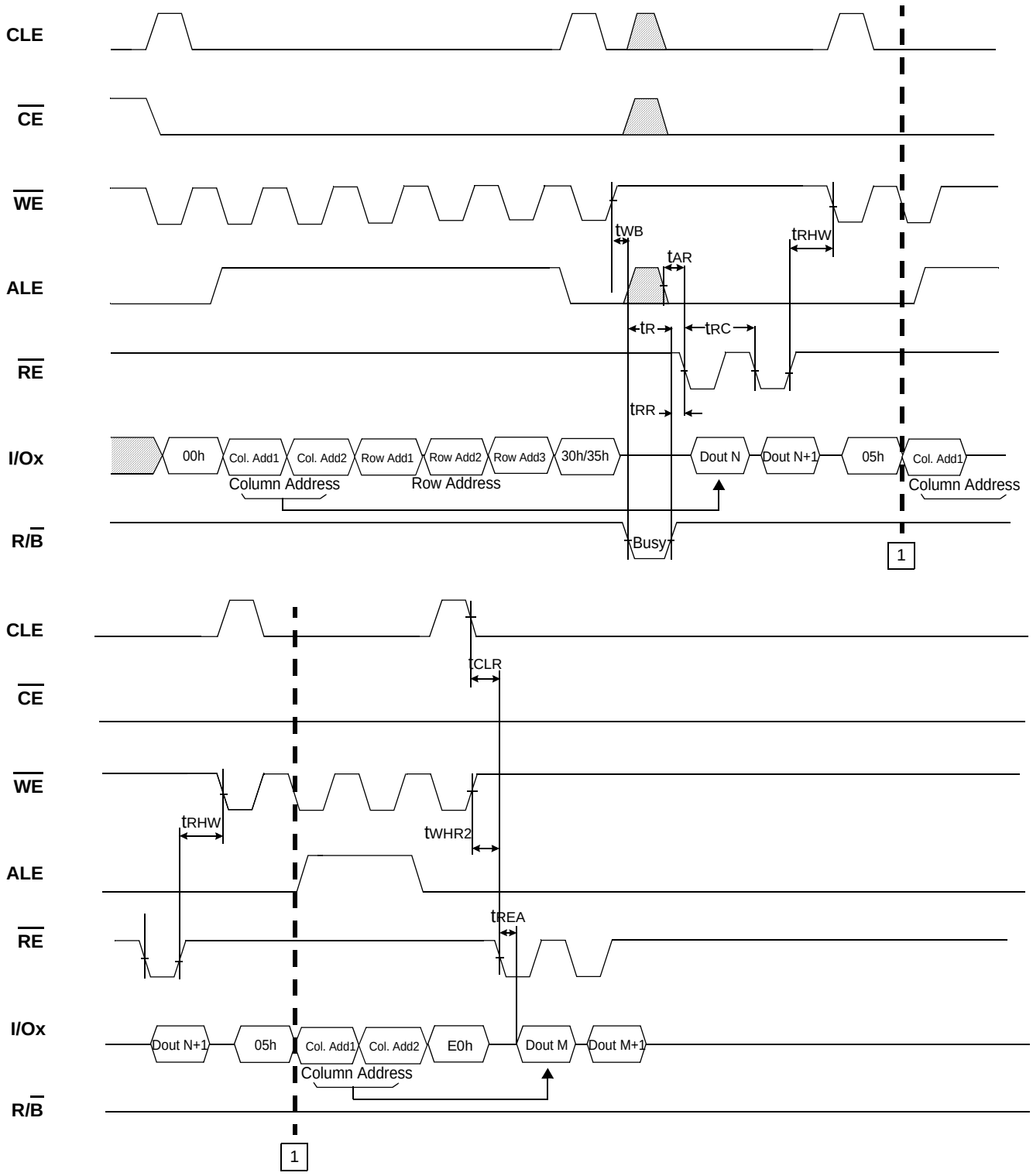

4.10 Cache Read Operation

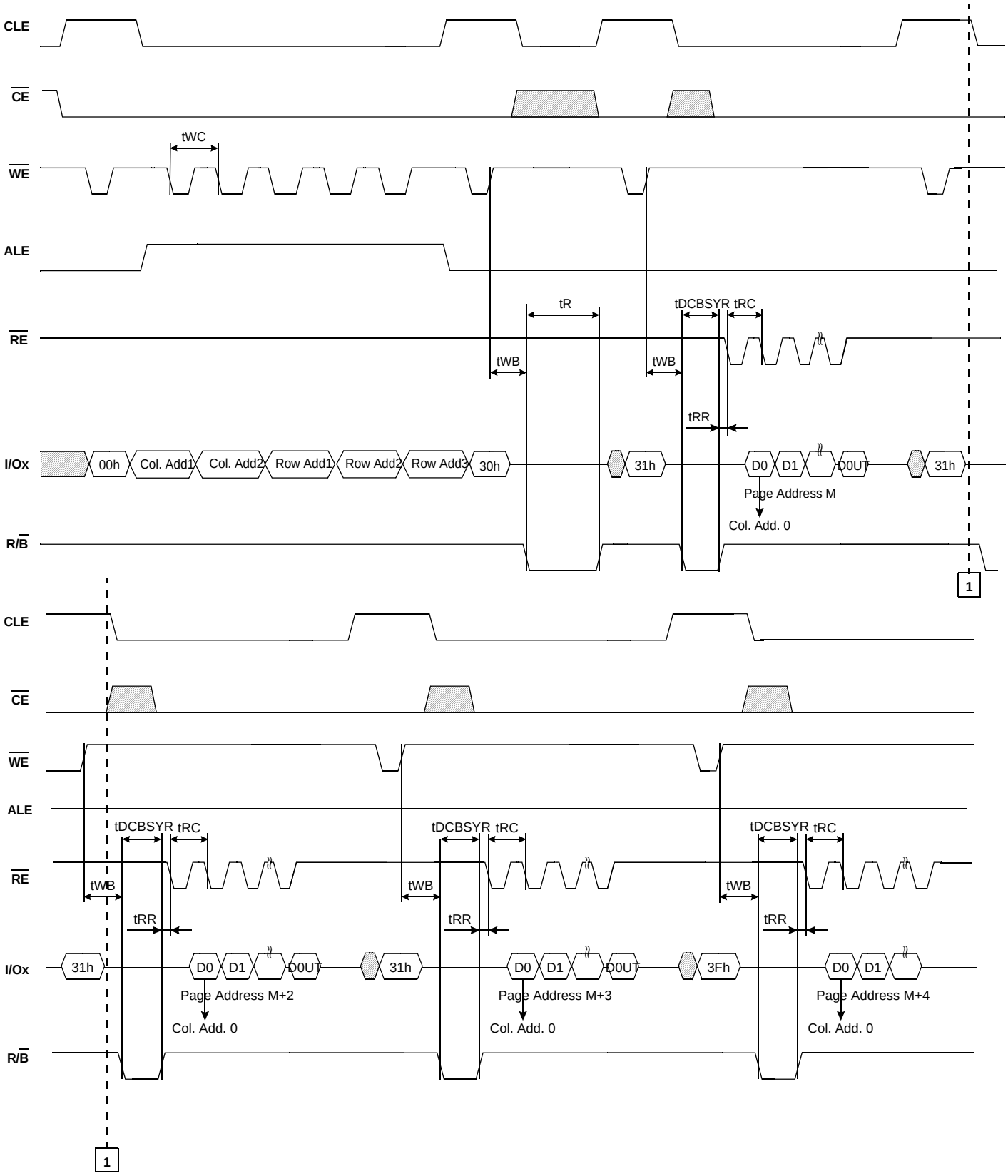

NOTE :
1) The column address will be reset to 0 by the 31h and 3Fh command input.
2) Cache Read operation is available only within a block.

4.11 Two-Plane Page Read Operation with Two-Plane Random Data Out

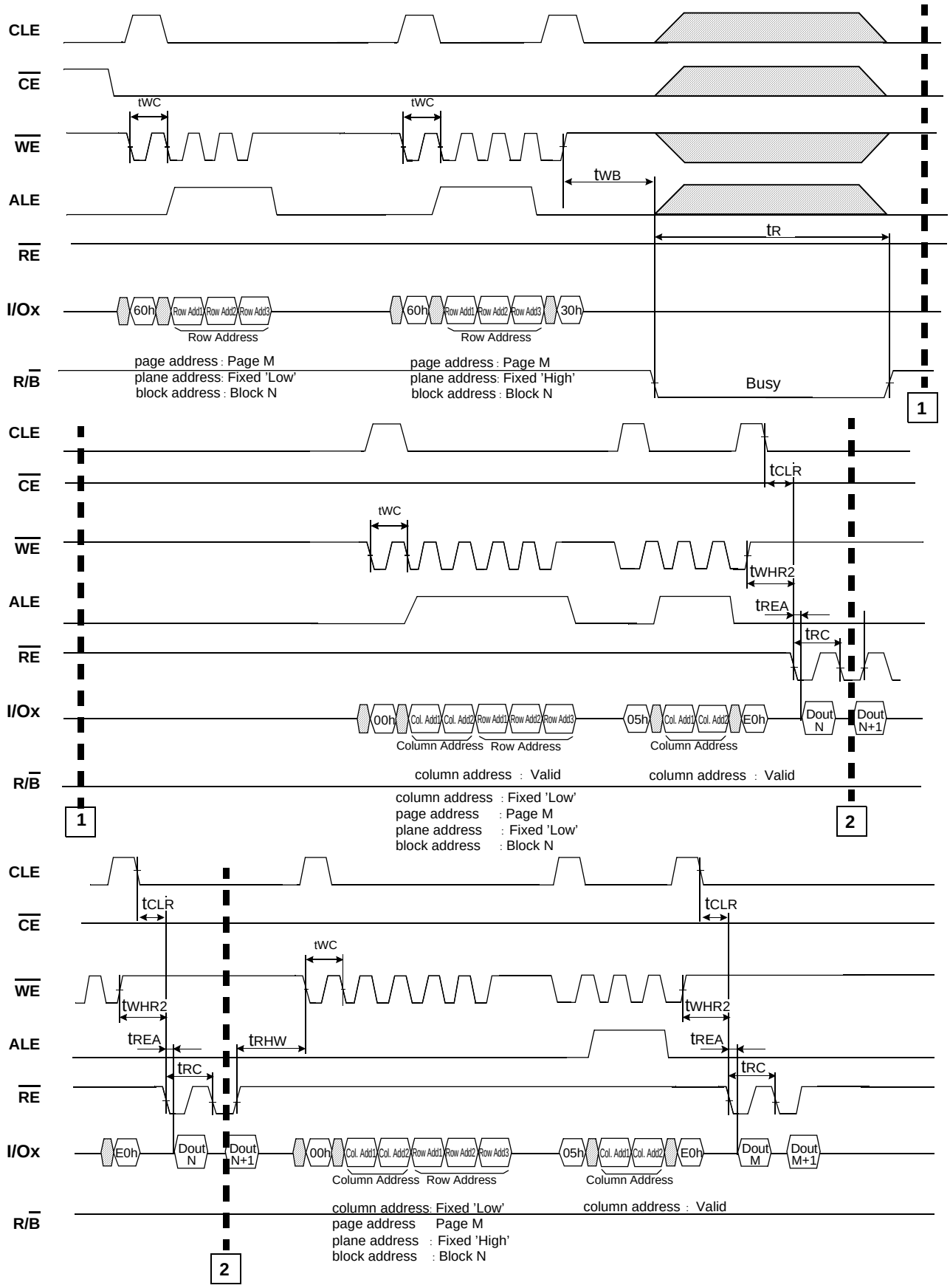

4.12 Two-Plane Cache Read Operation with Two-Plane Random Data Out (1/2)

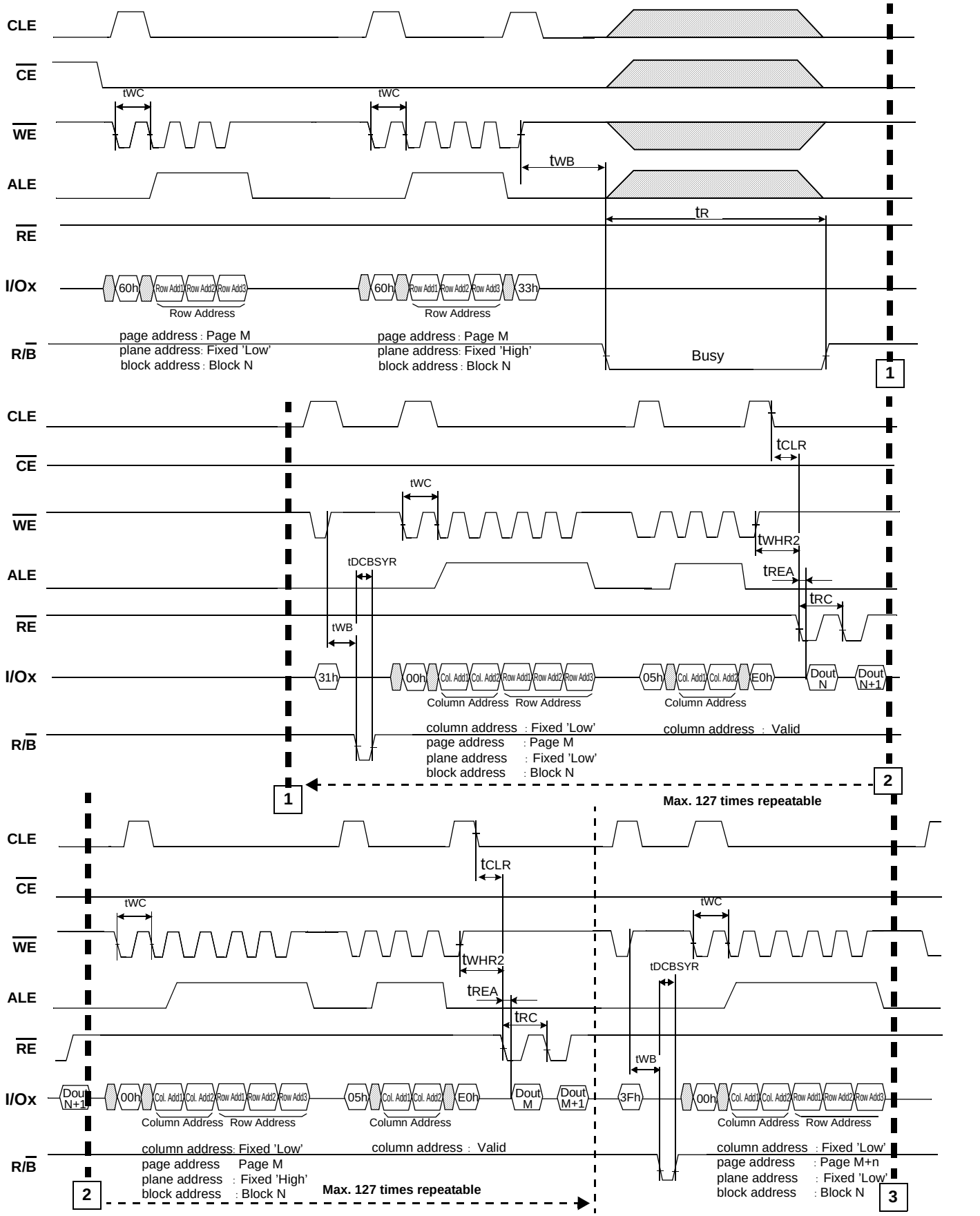

4.13 Two-Plane Cache Read Operation with Two-Plane Random Data Out (2/2)

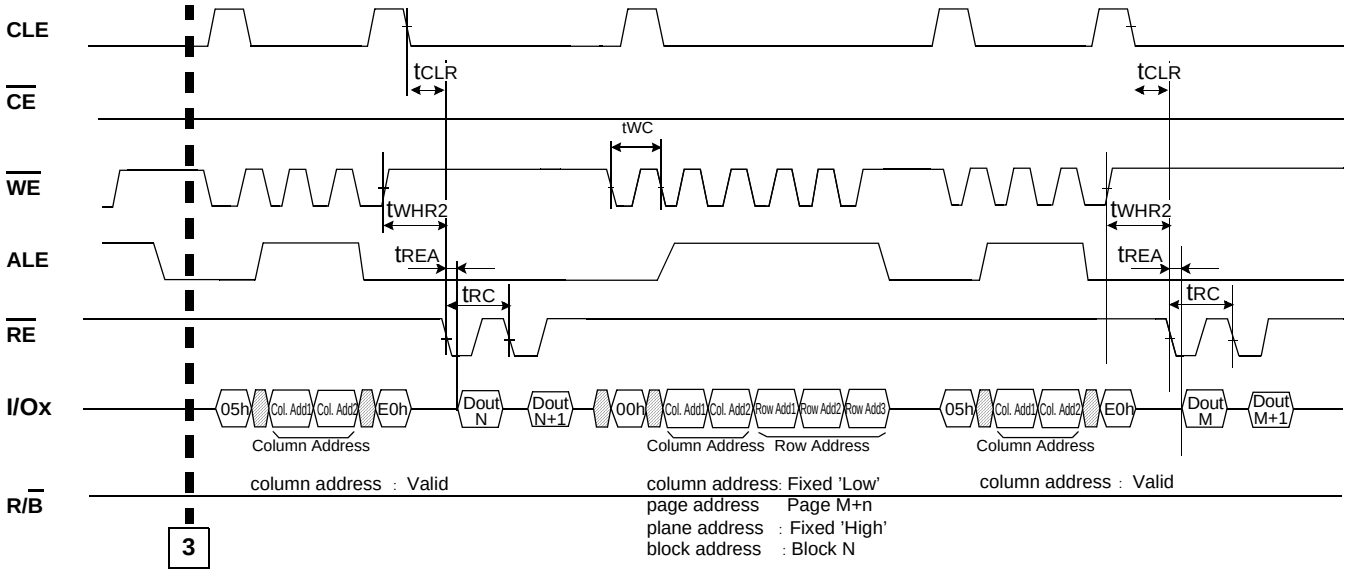

NOTE :
1) The column address will be reset to 0 by the 3Fh command input.
2) Cache Read operation is available only within a block.
3) Make sure to terminate the operation with 3Fh command. If the operation is terminated by 31h command, monitor I/O 6 (Ready/Busy) by issuing Status Read Command (70h) and make sure the previous page read operation is completed. If the page read operation is completed, issue FFh reset before next operation.

4.14 Page Program Operation

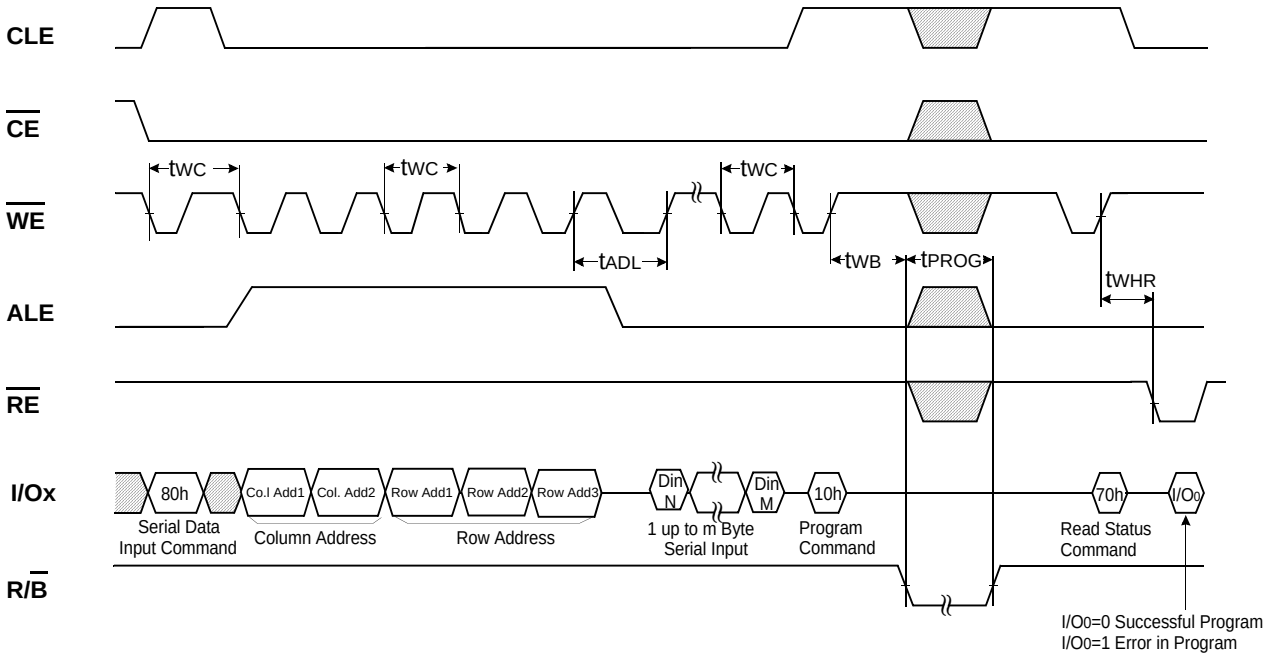

NOTE :
tADL is the time from the $\overline{WE}$ rising edge of final address cycle to the $\overline{WE}$ rising edge of first data cycle.

4.15 Page Program Operation with Random Data Input

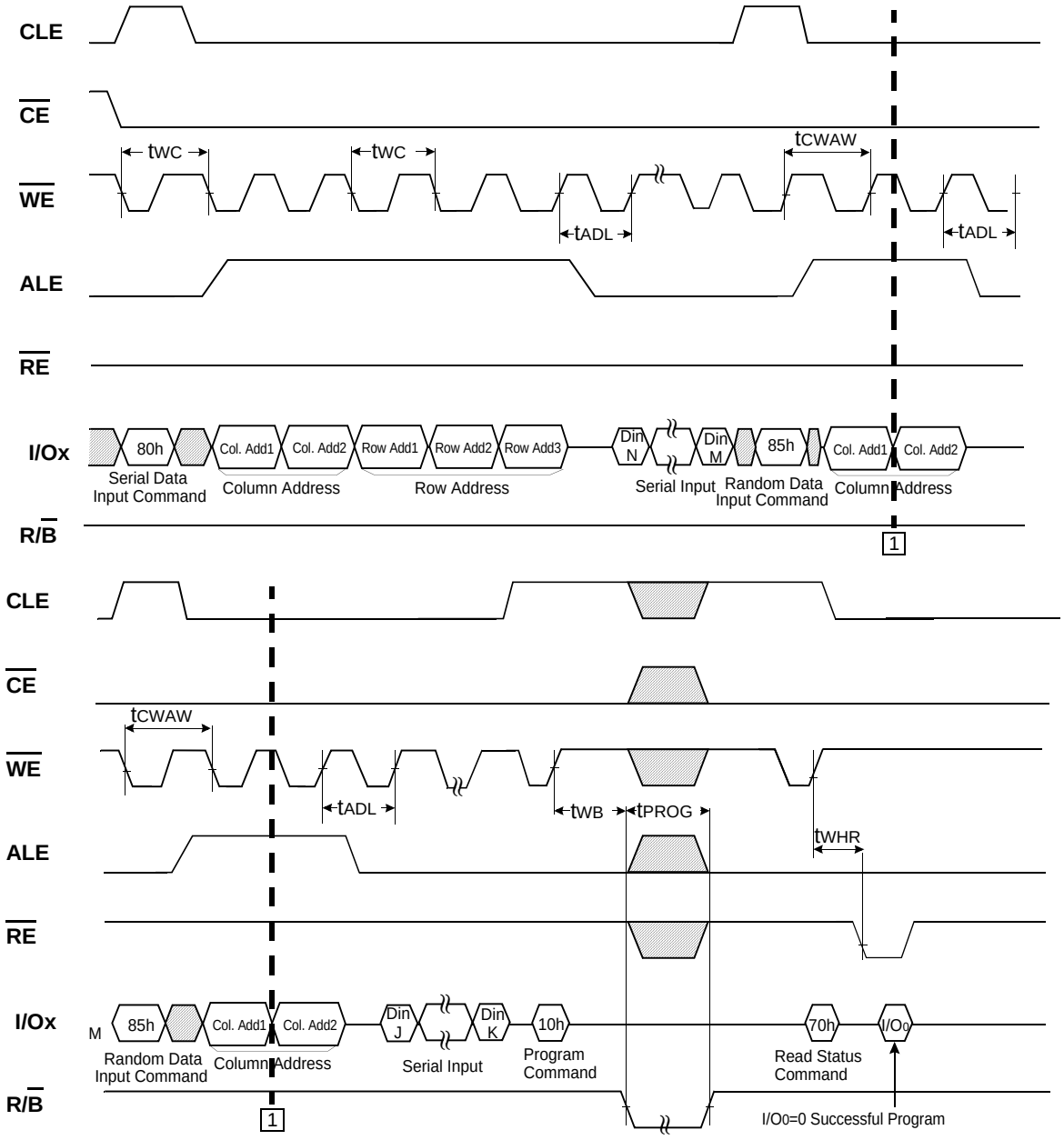

NOTE :
1) tADL is the time from the $\overline{WE}$ rising edge of final address cycle to the $\overline{WE}$ rising edge of first data cycle.

4.16 Copy-Back Program Operation with Random Data Input

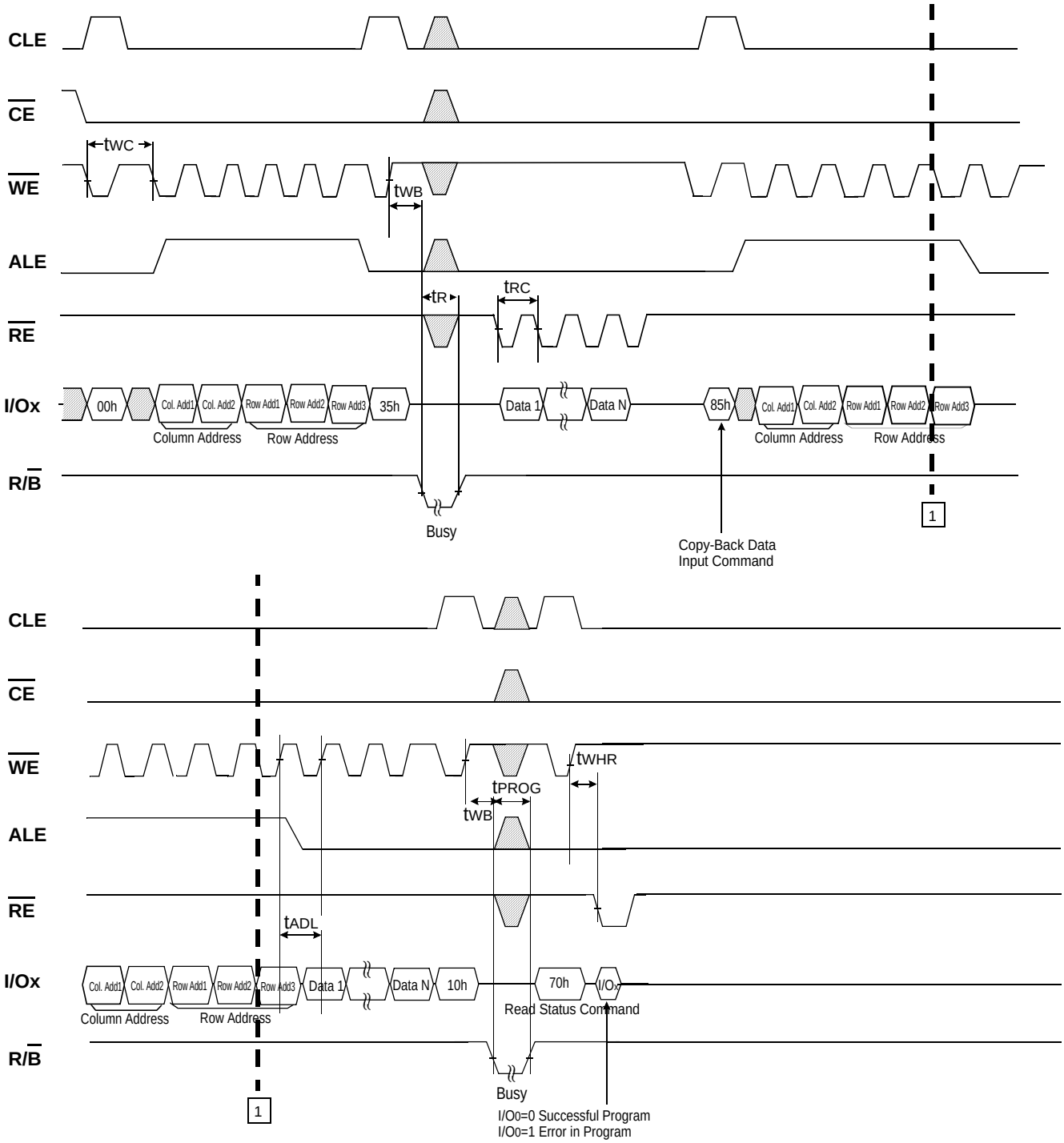

NOTE :
1) tADL is the time from the $\overline{WE}$ rising edge of final address cycle to the $\overline{WE}$ rising edge of first data cycle.

4.17 Intelligent Copy-Back Program(1/2)

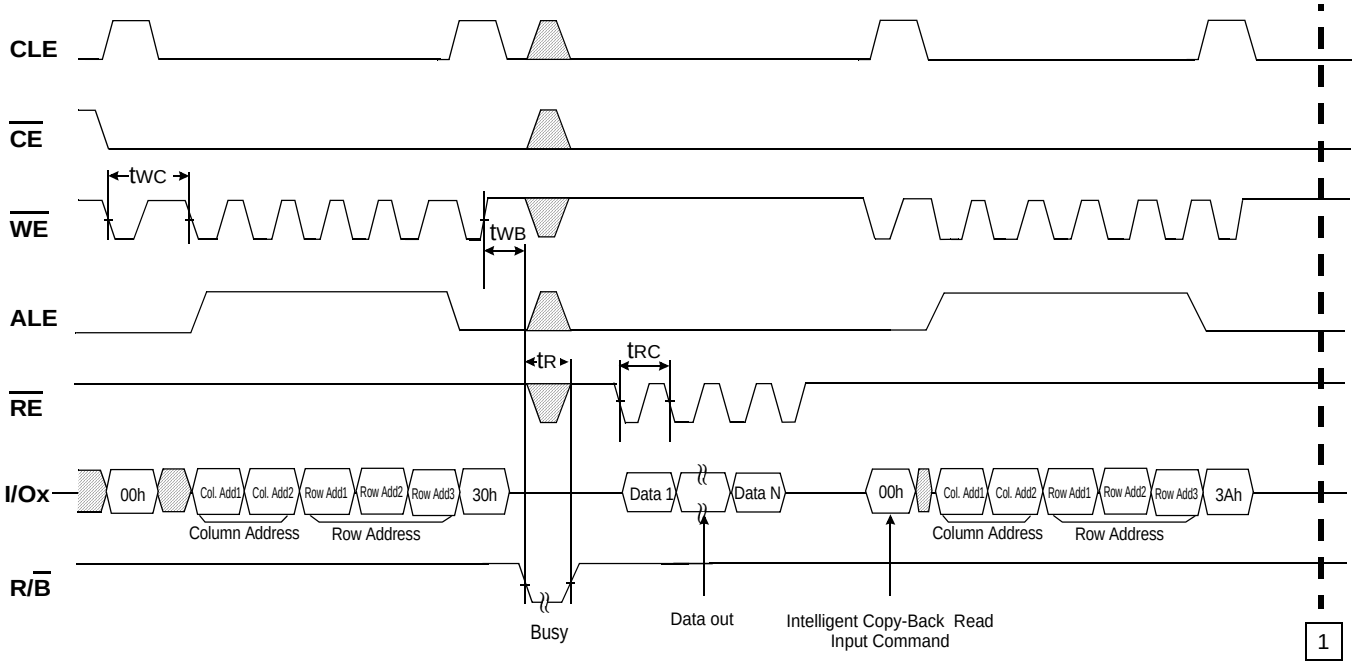

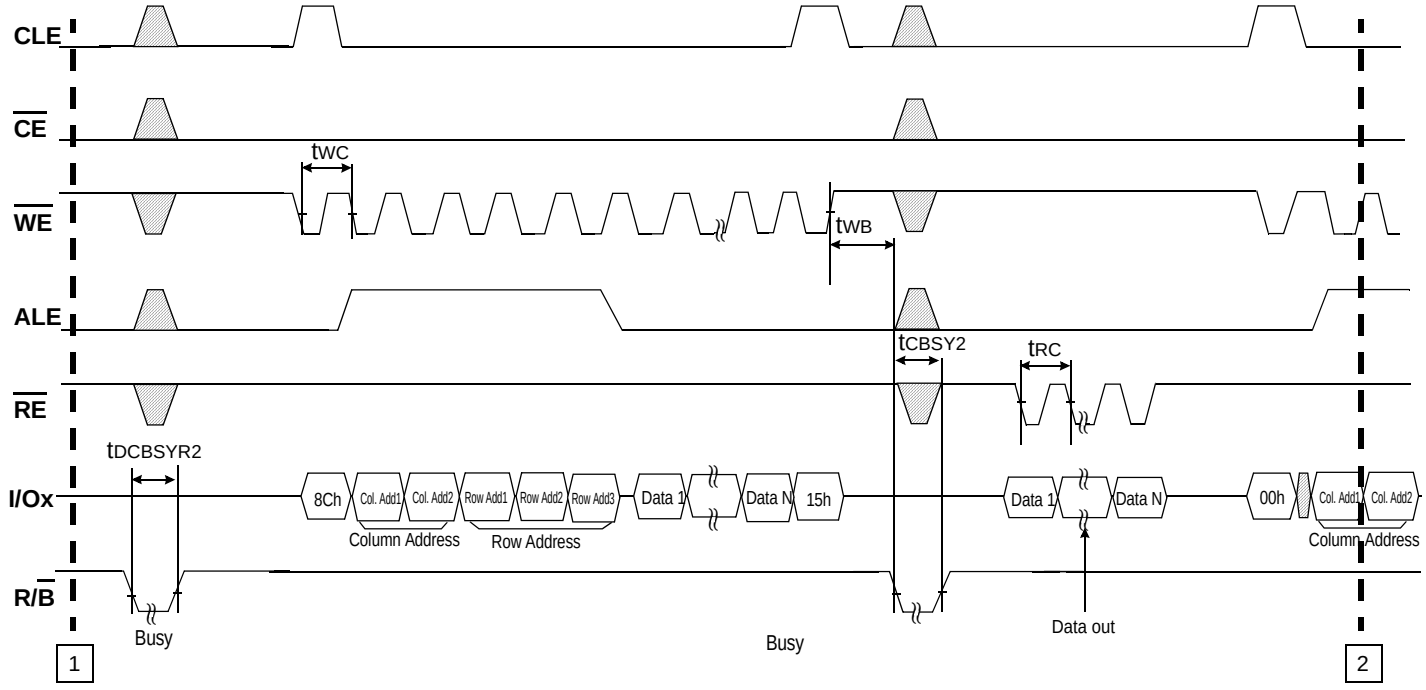

Intelligent Copy-Back Program(2/2)

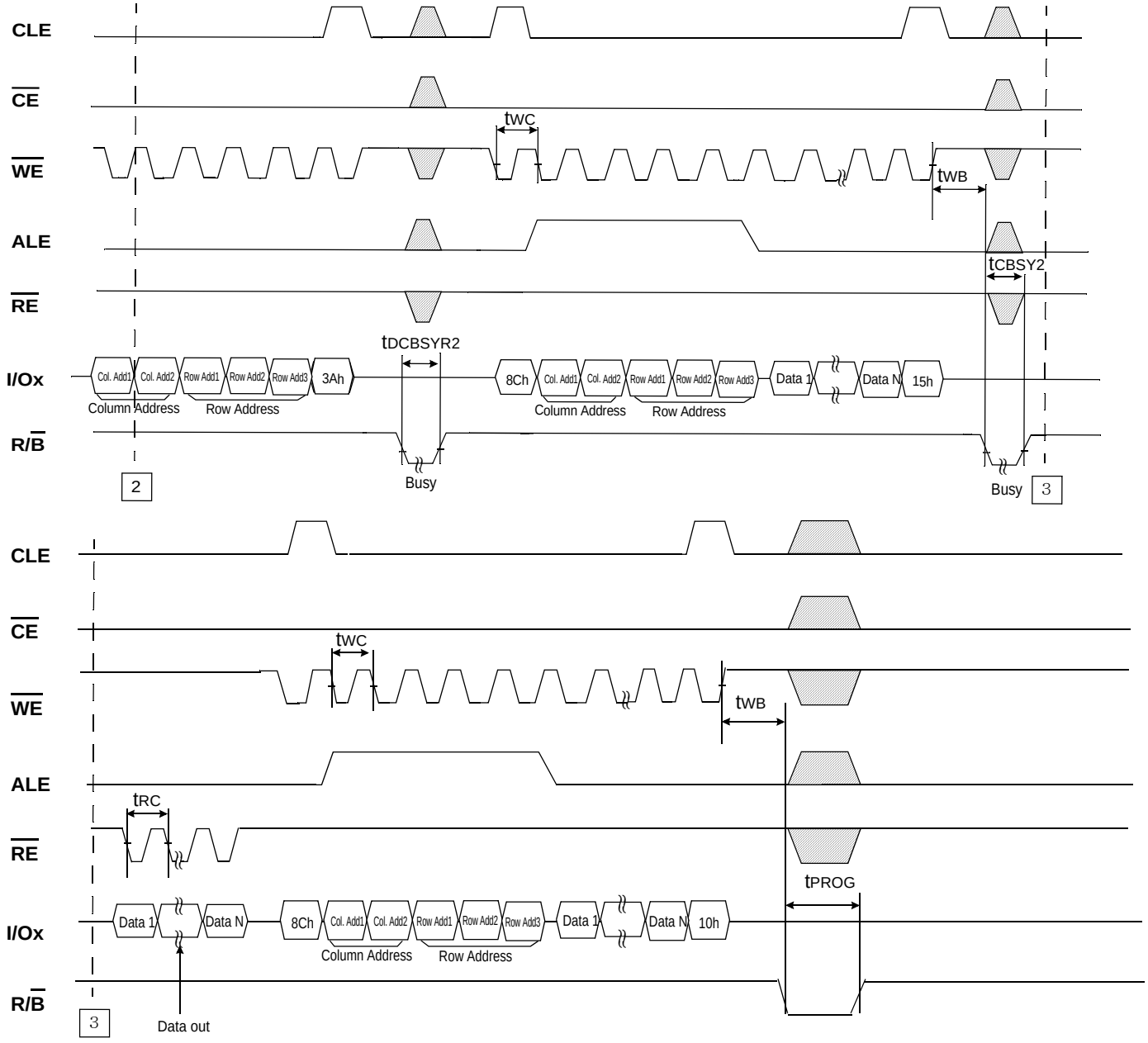

4.18 Cache Program Operation(available only within a block)

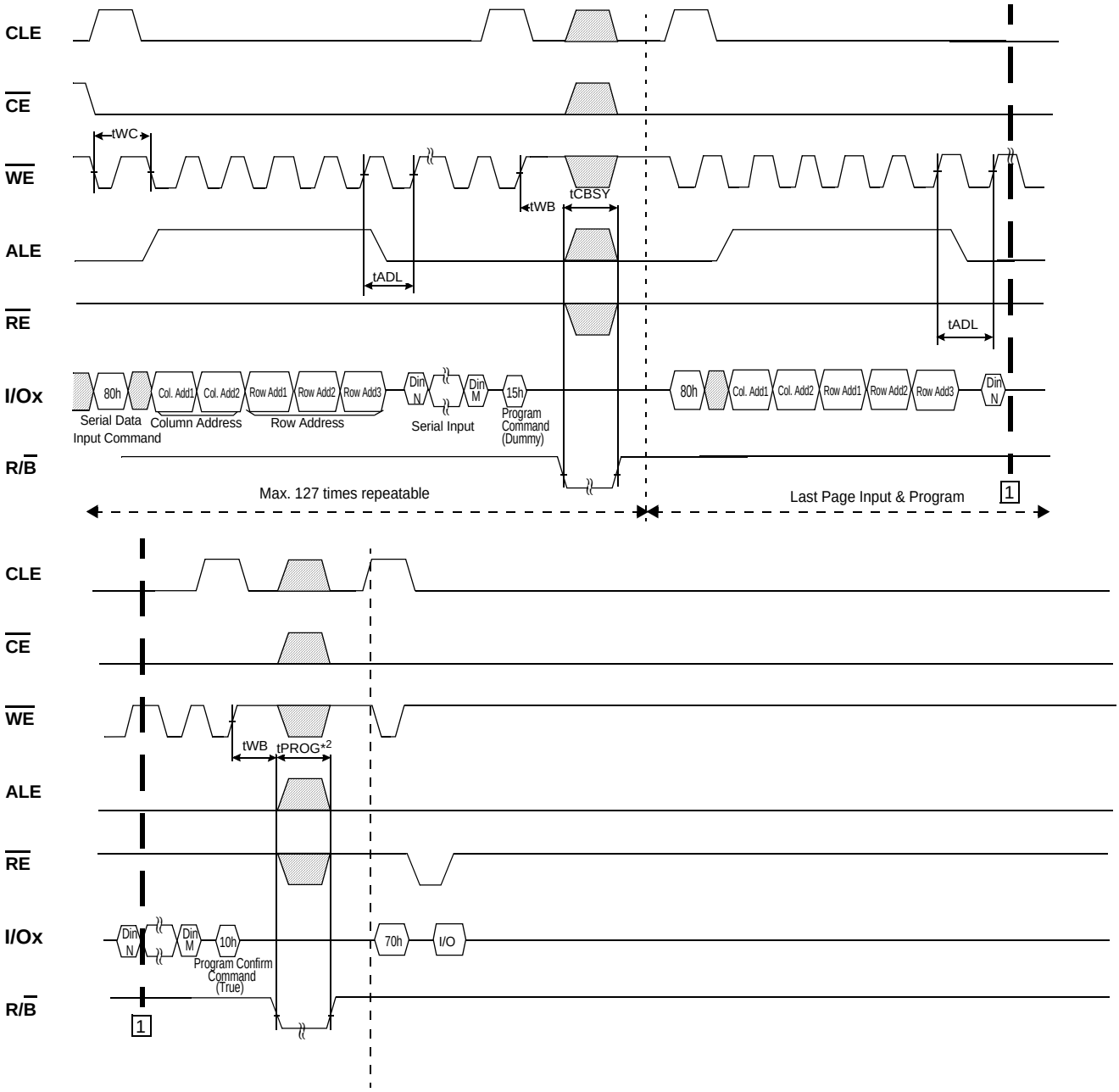

NOTE :
1) tADL is the time from the $\overline{WE}$ rising edge of final address cycle to the $\overline{WE}$ rising edge of first data cycle.
2) Since programming the last page does not employ caching, the program time has to be that of Page Program. However, if the previous program cycle with the cache data has not finished,
the actual program cycle of the last page is initiated only after completion of the previous cycle, which can be expressed as the following formula.
tPROG = Program time for the last page + Program time for the (last -1)th page - (command input cycle time + address input cycle time + Last page data loading time)
Maximum tPROG is 10ms in this case.

e.g.) Cache Program

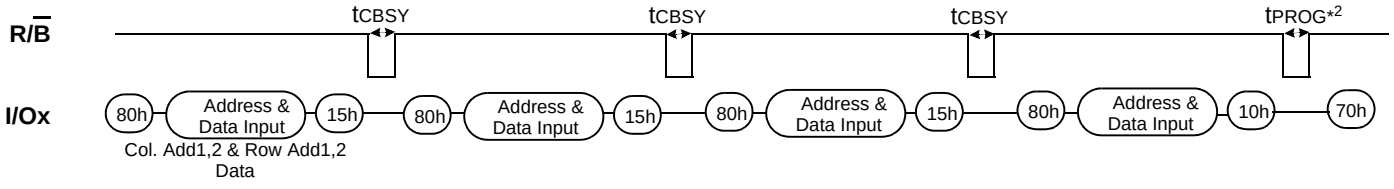

4.19 Two-Plane Copy-Back Program

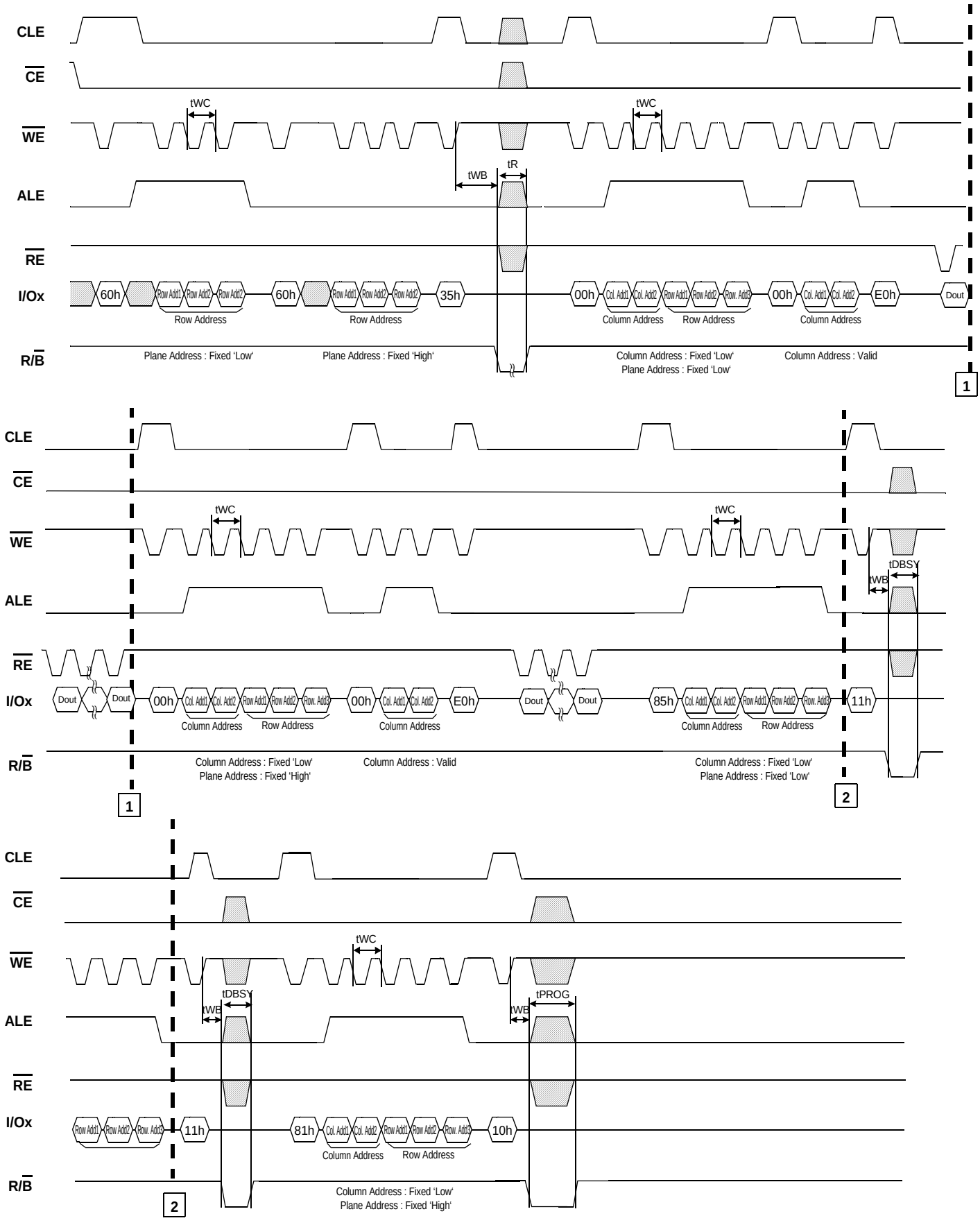

4.20 Two-Plane Intelligent Copy-Back Program(1/3)

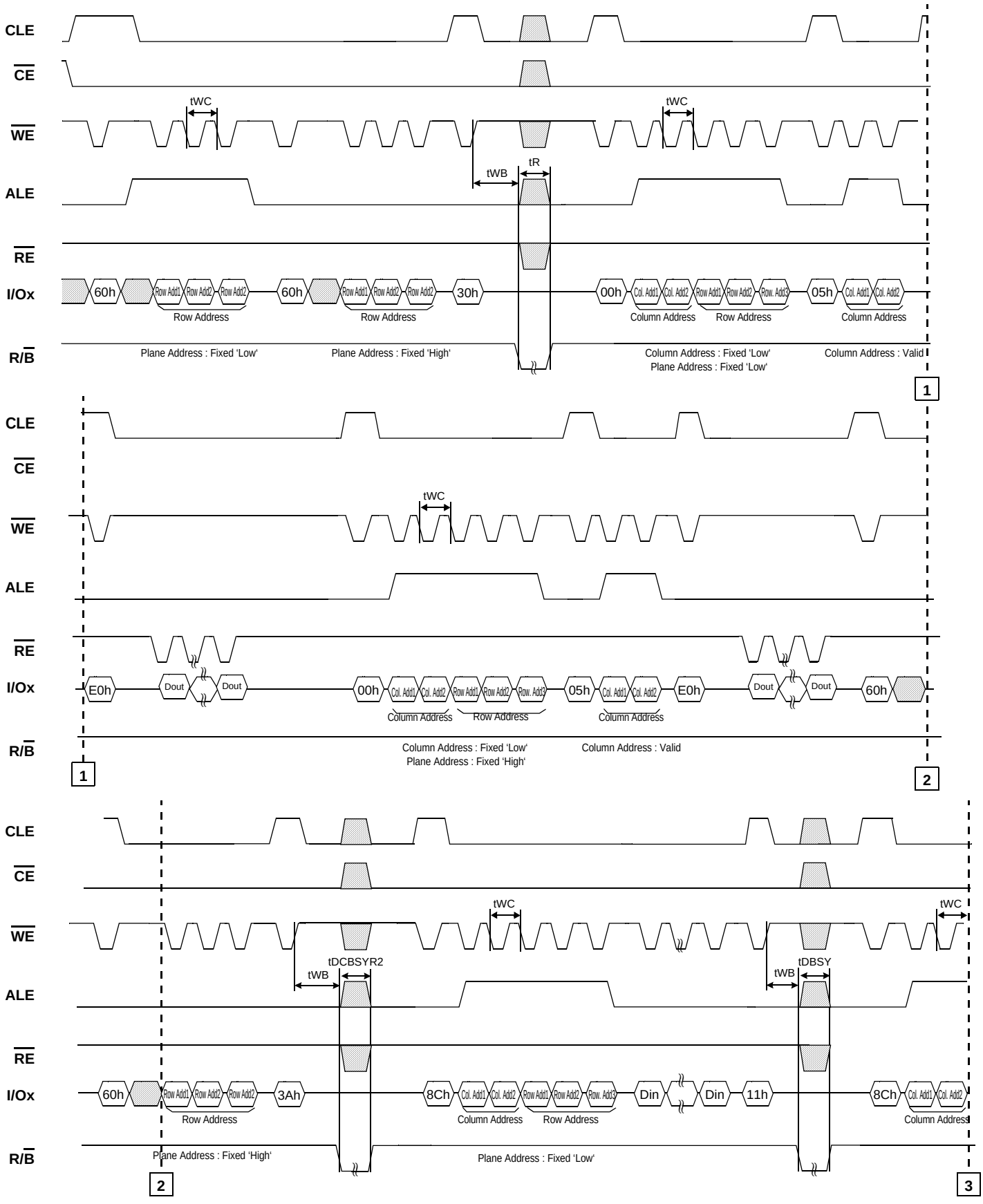

Two-Plane Intelligent Copy-Back Program(2/3)

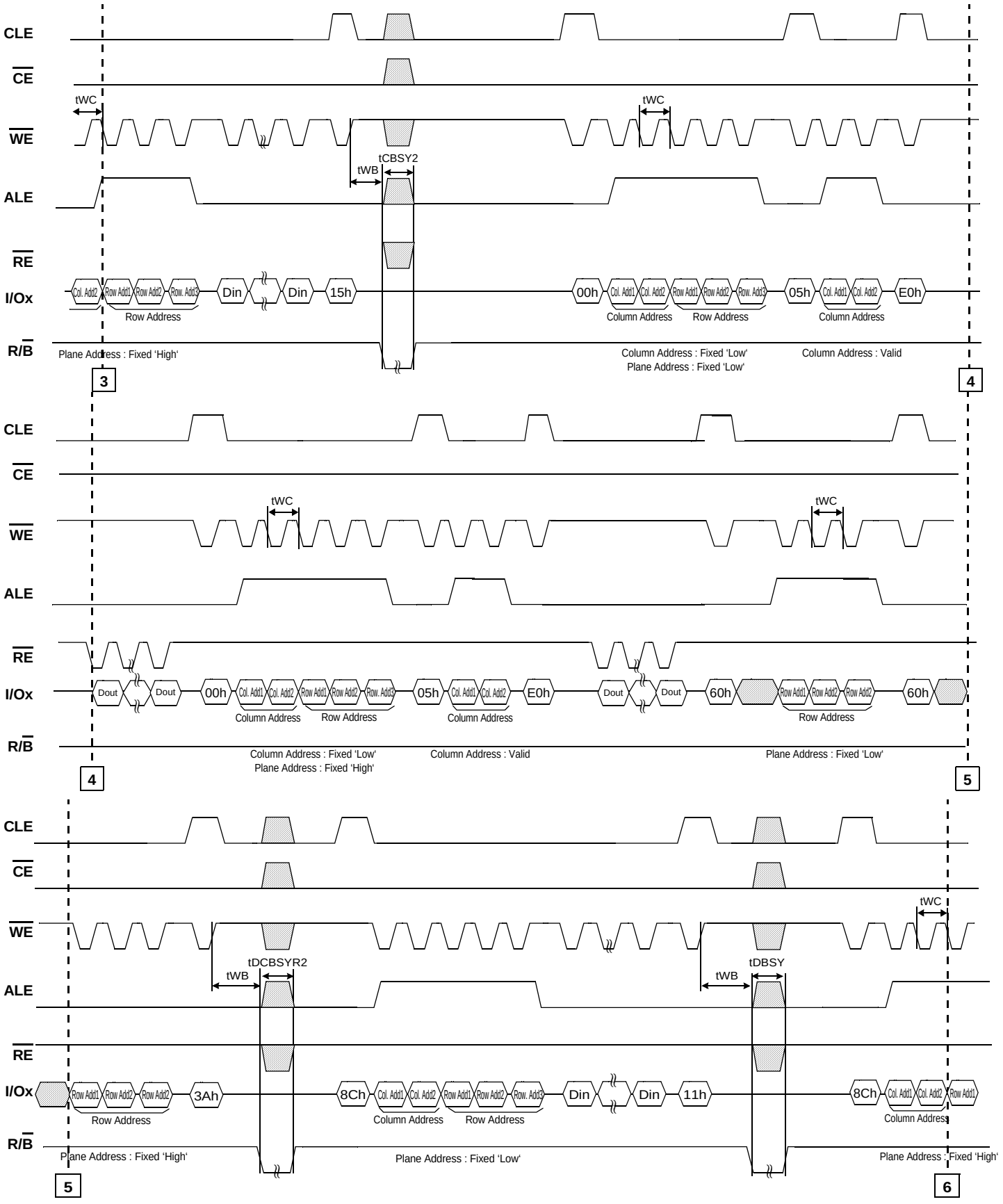

Two-Plane Intelligent Copy-Back Program(3/3)

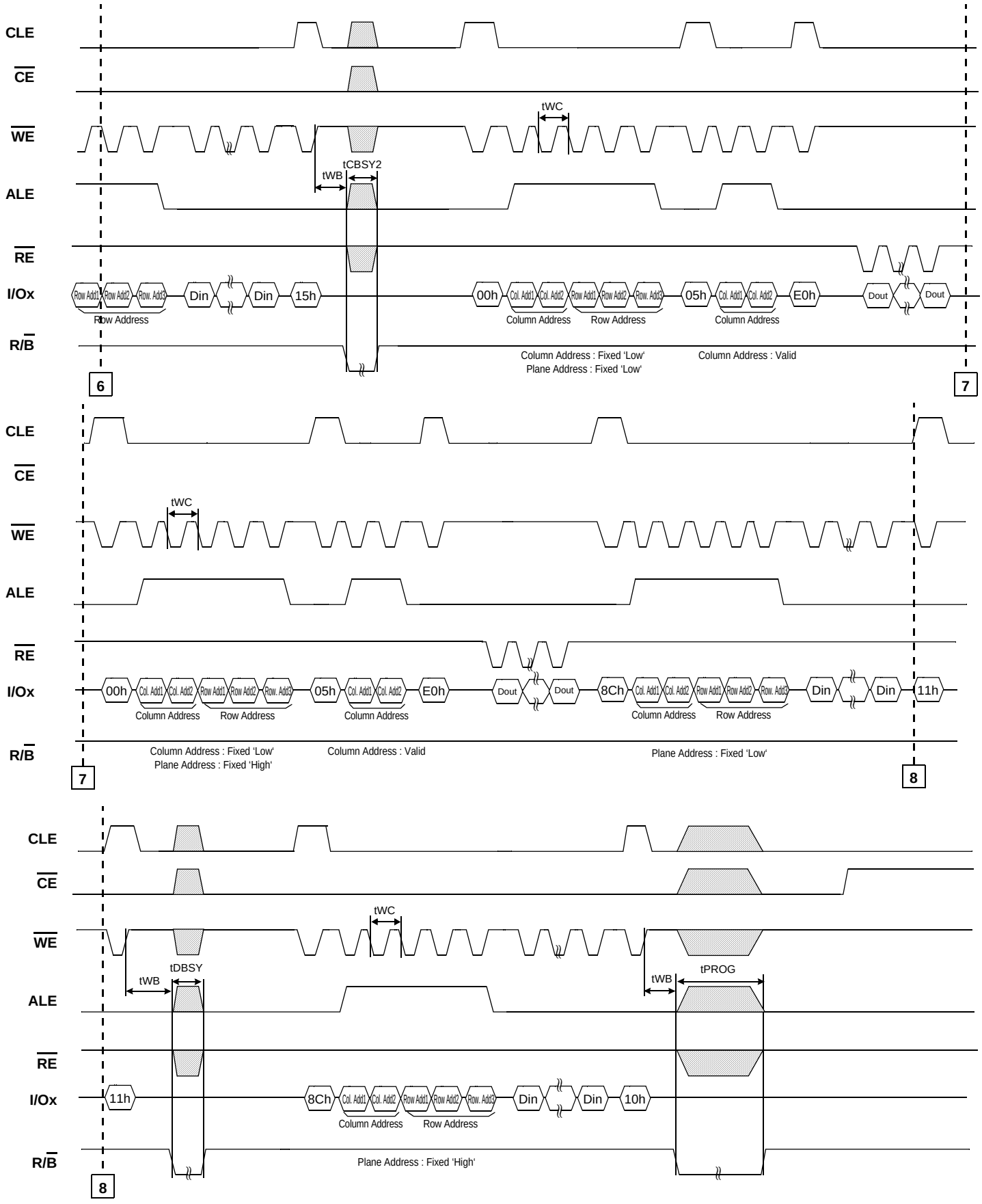

4.21 Two-Plane Page Program Operation

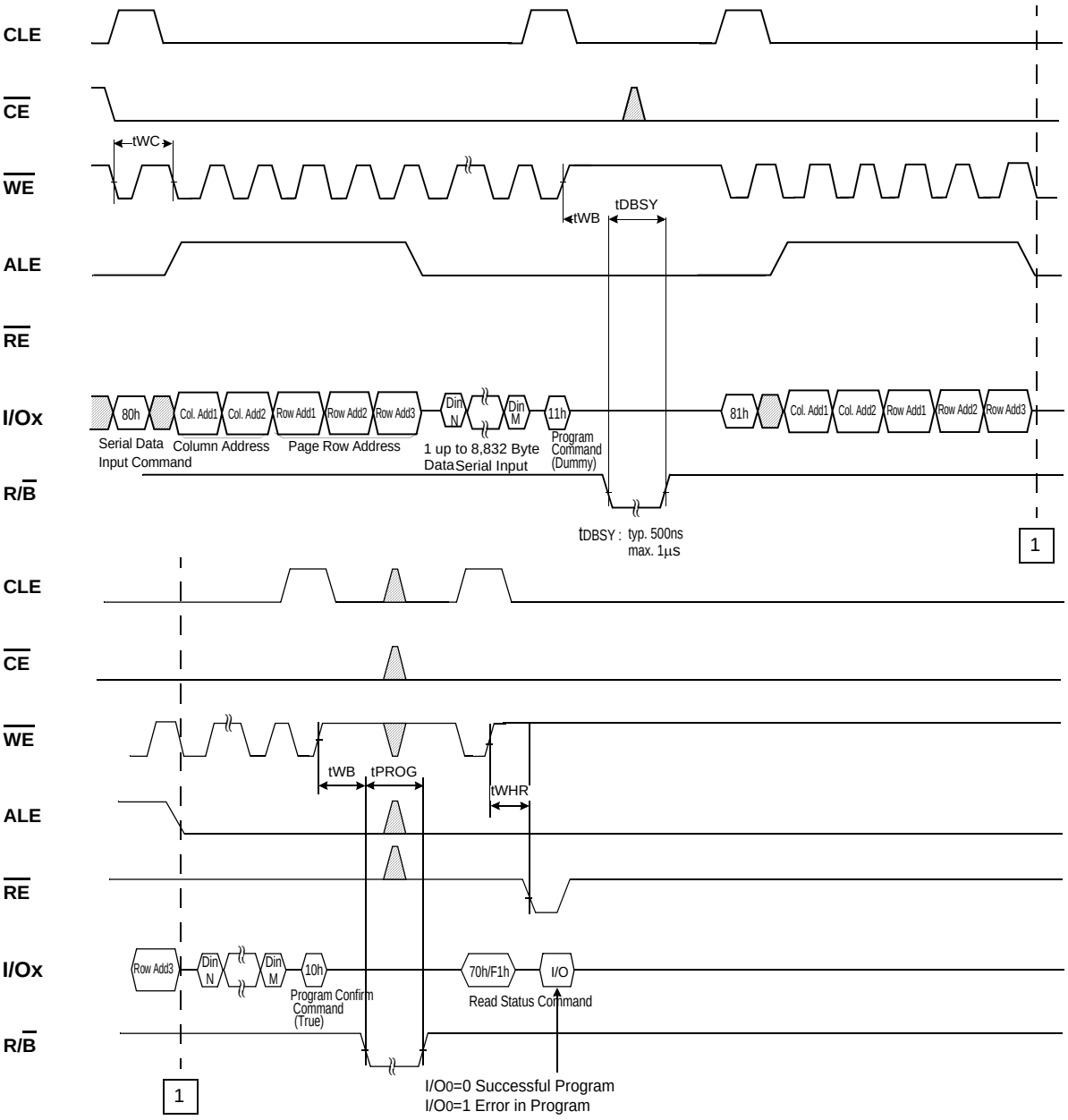

e.g.) Two-Plane Page Program

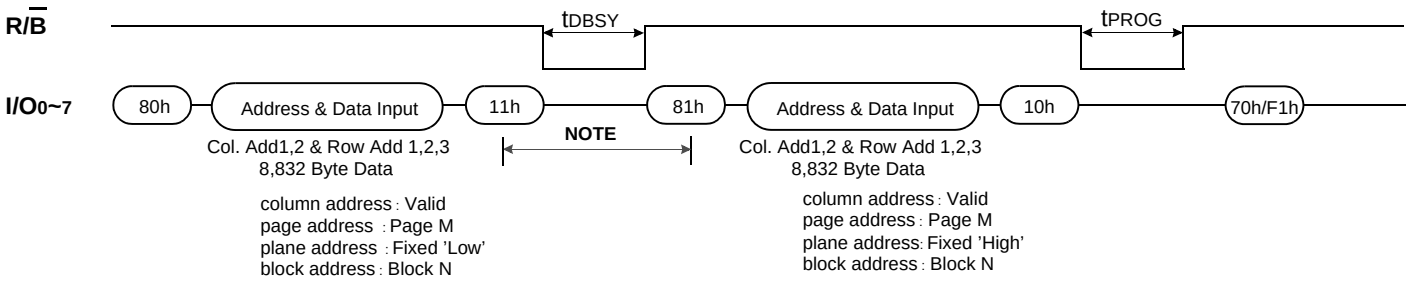

NOTE :
Any command between 11h and 81h is prohibited except 70h/F1h and FFh.

4.22 Two-Plane Cache Program Operation

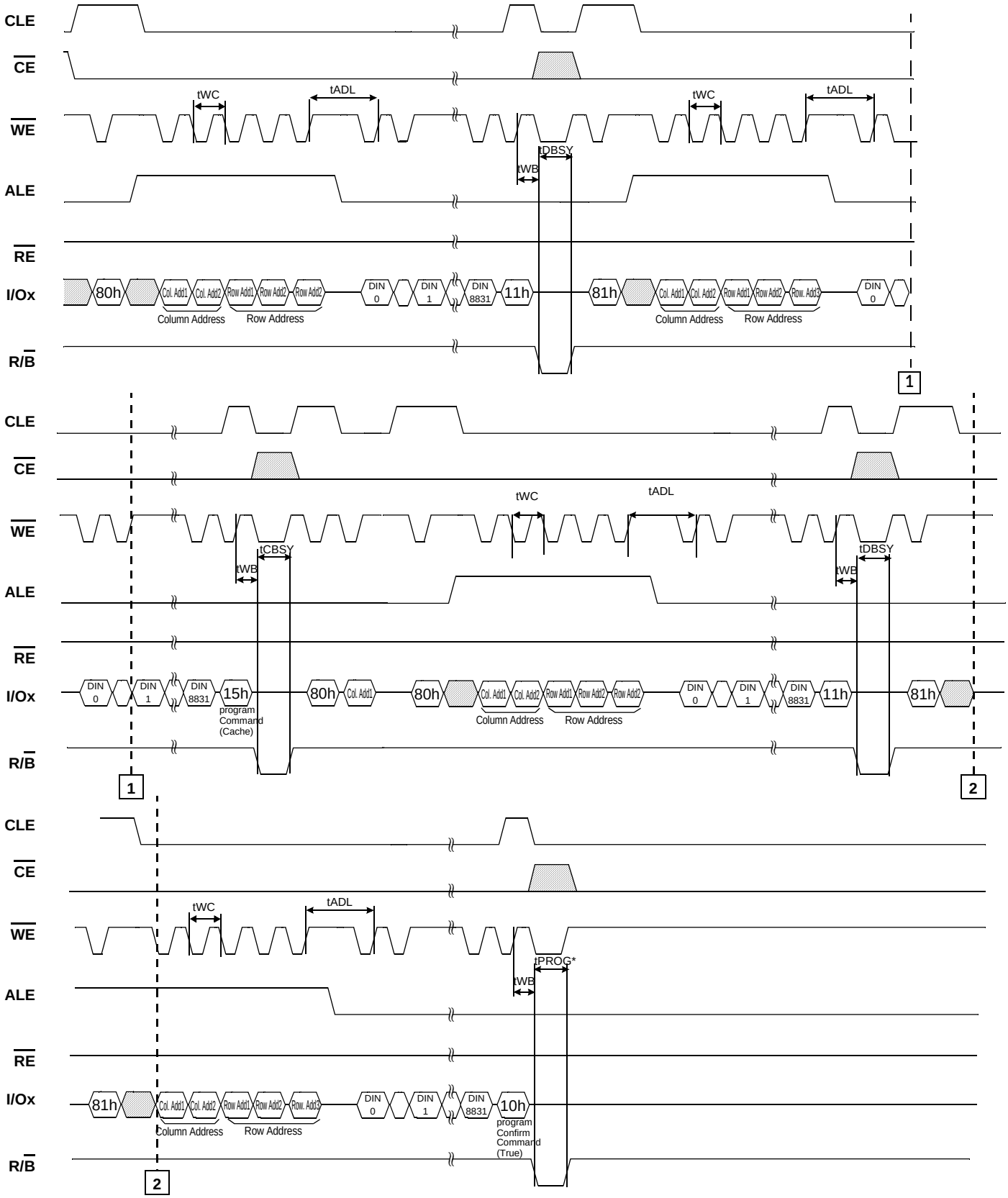

NOTE :

1) tPROG = Program time for the last page + Program time for the (last -1)th page - (command input cycle time + address input cycle time + Last page data loading time)
2) Make sure to terminate the operation with 80h-10h- command sequence. If the operation is terminated by 80h-15h command sequence, monitor I/O 6 (Ready/Busy) by issuing Status Read Command (70h) and make sure the previous page program operation is completed. If the page program operation is completed issue FFh reset before next operation.

4.23 Block Erase Operation

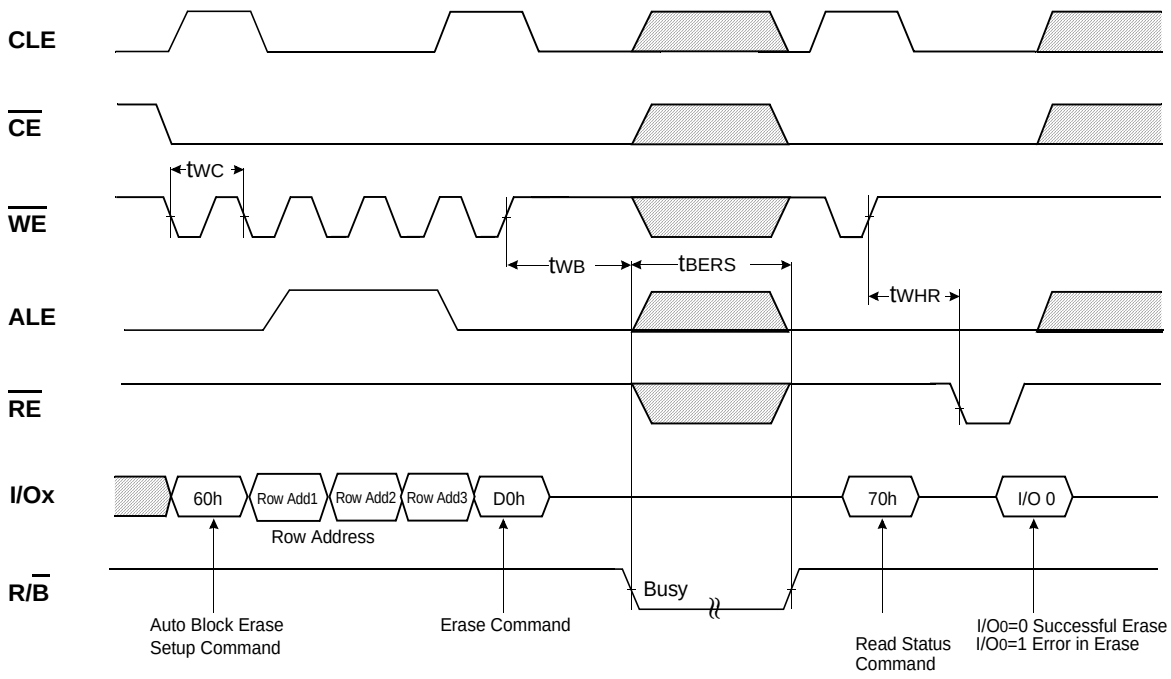

4.24 Two-Plane Block Erase Operation

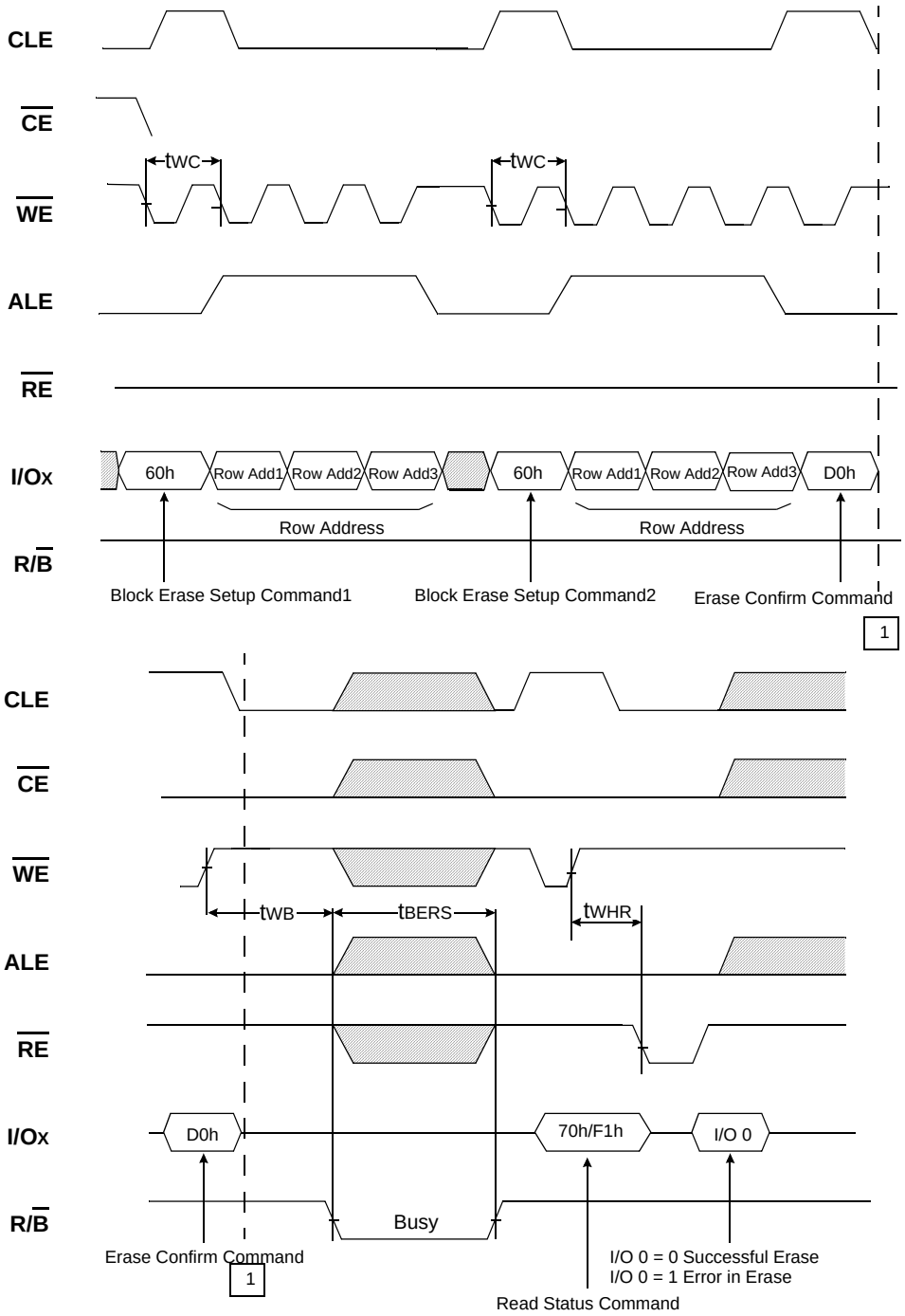

e.g.) Address Restriction for Two-Plane Block Erase Operation

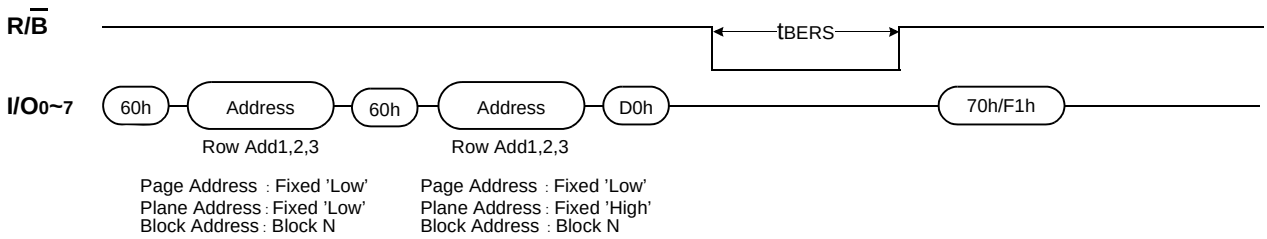

Page Address : Fixed 'Low'
Plane Address : Fixed 'Low'
Block Address : Block N

Page Address : Fixed 'Low'
Plane Address : Fixed 'High'
Block Address : Block N

4.25 Read ID Operation

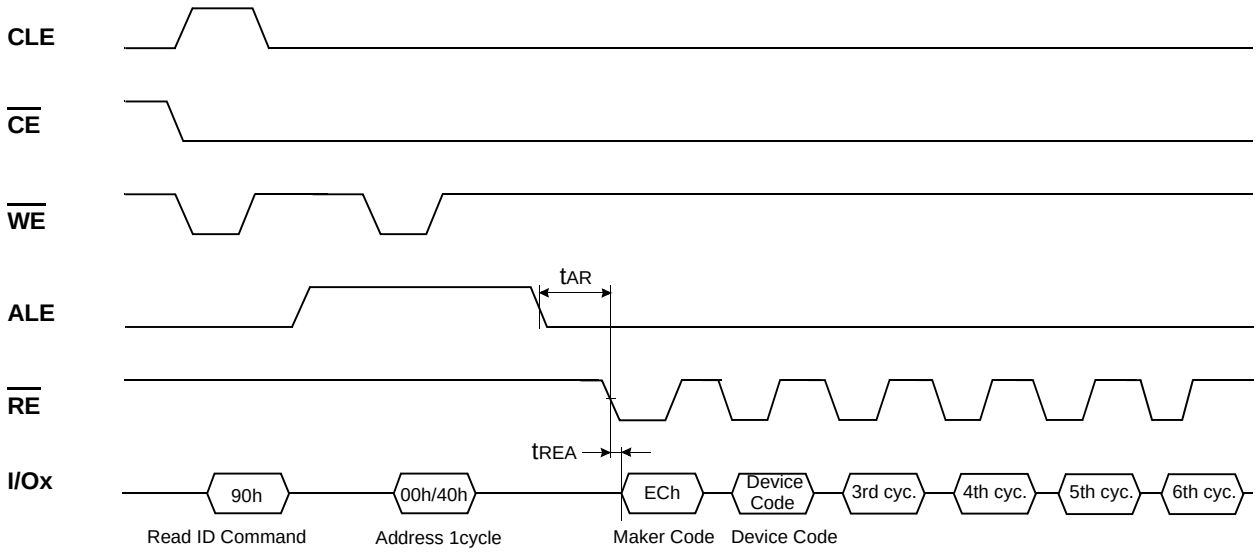

NOTE :
1) Address 00h is for Samsung legacy and 40h is for new JEDEC ID information.

4.26 00h Address ID Cycle

Device	1st Cycle	Dvice Code(2nd)	3rd Cycle	4th Cycle	5th Cycle	6th Cycle
K9GBG08U0A	ECh	D7h	94h	76h	64h	43h
K9LCG08U1A						
K9HDG08U5A						

4.27 40h Address ID Cycle

Device	1st Cycle	Dvice Code(2nd)	3rd Cycle	4th Cycle	5th Cycle	6th Cycle
K9GBG08U0A	4Ah	45h	44h	45h	43h	01h
K9LCG08U1A						
K9HDG08U5A						

4.27.1 ID Definition Table

	Description
1st Byte	Maker Code
2nd Byte	Device Code
3rd Byte	Internal Chip Number, Cell Type, Number of Simultaneously Programmed Pages, Etc.
4th Byte	Page Size, Block Size, Redundant Area Size.
5th Byte	Plane Number, ECC Level, Organization.
6th Byte	Device Technology, EDO, Interface.

3rd ID Data

	Description	I/O7	I/O6	I/O5 I/O4	I/O3 I/O2	I/O1 I/O0
Internal Chip Number	1 2 4 8					0 0 0 1 1 0 1 1
Cell Type	2 Level Cell 4 Level Cell 8 Level Cell 16 Level Cell				0 0 0 1 1 0 1 1	
Number of Simultaneously Programmed Pages	1 2 4 8			0 0 0 1 1 0 1 1		
Interleave Program Between multiple chips	Not Support Support		0 1			
Cache Program	Not Support Support	0 1				

4th ID Data

	Description	I/O7	I/O6	I/O5 I/O4	I/O3	I/O2	I/O1 I/O0
Page Size (w/o redundant area)	2KB 4KB 8KB Reserved						0 0 0 1 1 0 1 1
Block Size (w/o redundant area)	128KB 256KB 512KB 1MB Reserved Reserved Reserved Reserved	0 0 0 0 1 1 1 1		0 0 0 1 1 0 1 1 0 0 0 1 1 0 1 1			
Redundant Area Size (byte / Page Size)	Reserved 128B 218B 400B 436B 640B Reserved Reserved		0 0 0 0 1 1 1 1		0 0 1 1 0 0 1 1	0 1 0 1 0 1 0 1	

5th ID Data

	Description	I/O7	I/O6	I/O5	I/O4	I/O3	I/O2	I/O1	I/O0
Plane Number	1 2 4 8					0 0 1 1	0 1 0 1		
ECC Level	1bit / 512B 2bit / 512B 4bit / 512B 8bit / 512B 16bit / 512B 24bit / 1KB 40bit/ 1KB Reserved		0 0 0 0 1 1 1 1	0 0 1 1 0 0 1 1	0 1 0 1 0 1 0 1				
Reserved		0						0	0

6th ID Data

	Description	I/O7	I/O6	I/O5	I/O4	I/O3	I/O2	I/O1	I/O0
Device Version	50nm 40nm 30nm 20nm Reserved Reserved Reserved Reserved						0 0 0 0 1 1 1 1	0 0 1 1 0 0 1 1	0 1 0 1 0 1 0 0
EDO	Not Support Support		0 1						
Interface	Conventional Toggle mode	0 1							
Reserved				0	0	0			

40h Address ID Definition Table

Byte	Description	IDQ7	DQ6	DQ5	DQ4	DQ3	DQ2	DQ1	DQ0
0	J	0	1	0	0	1	0	1	0
1	E	0	1	0	0	0	1	0	1
2	D	0	1	0	0	0	1	0	0
3	E	0	1	0	0	0	1	0	1
4	C	0	1	0	0	0	0	1	1
5	Legacy Asynchronous SDR Toggle Mode DDR Synchronous DDR	0	0	0	0	0 0 0	0 0 1	0 1 0	1 0 0

5.0 DEVICE OPERATION

5.1 Page Read

Page read is initiated by writing 00h-30h to the command register along with five address cycles. The 8,832 bytes of data within the selected page are transferred to the cache registers via data registers in less than tR. The system controller can detect the completion of this data transfer(tR) by analyzing the output of R/$\overline{B}$ pin. Once the data in a page is loaded into the cache registers, they may be read out in Read cycle time(tRC) by sequentially pulsing $\overline{RE}$. The repetitive high to low transitions of the $\overline{RE}$ clock make the device output the data starting from the selected column address up to the last column address.
The device may output random data in a page instead of the consecutive sequential data by writing random data output command. The column address of next data, which is going to be out, may be changed to the address which follows random data output command. Random data output can be operated multiple times regardless of how many times it is done in a page.

Read Operation

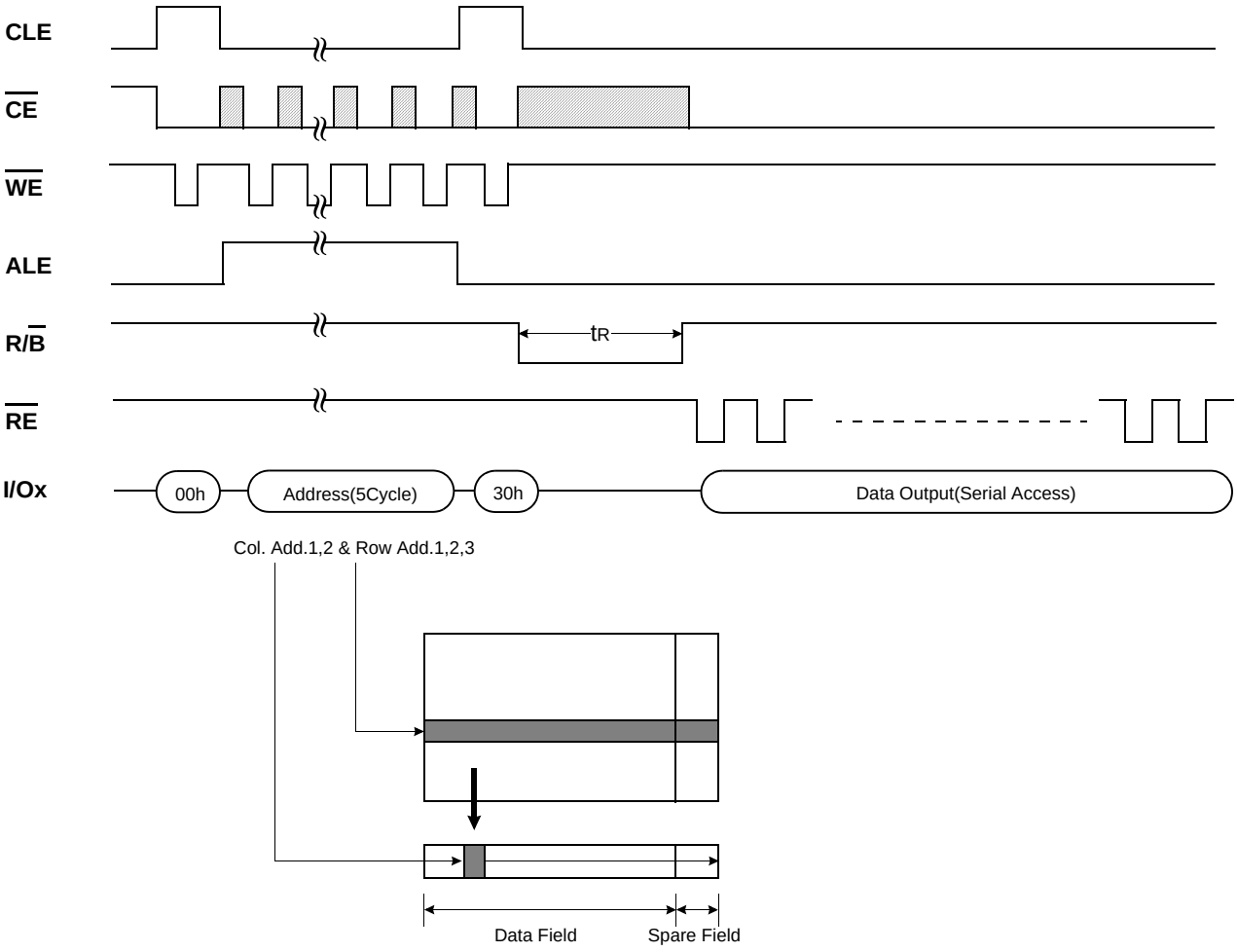

Random Data Output In a Page

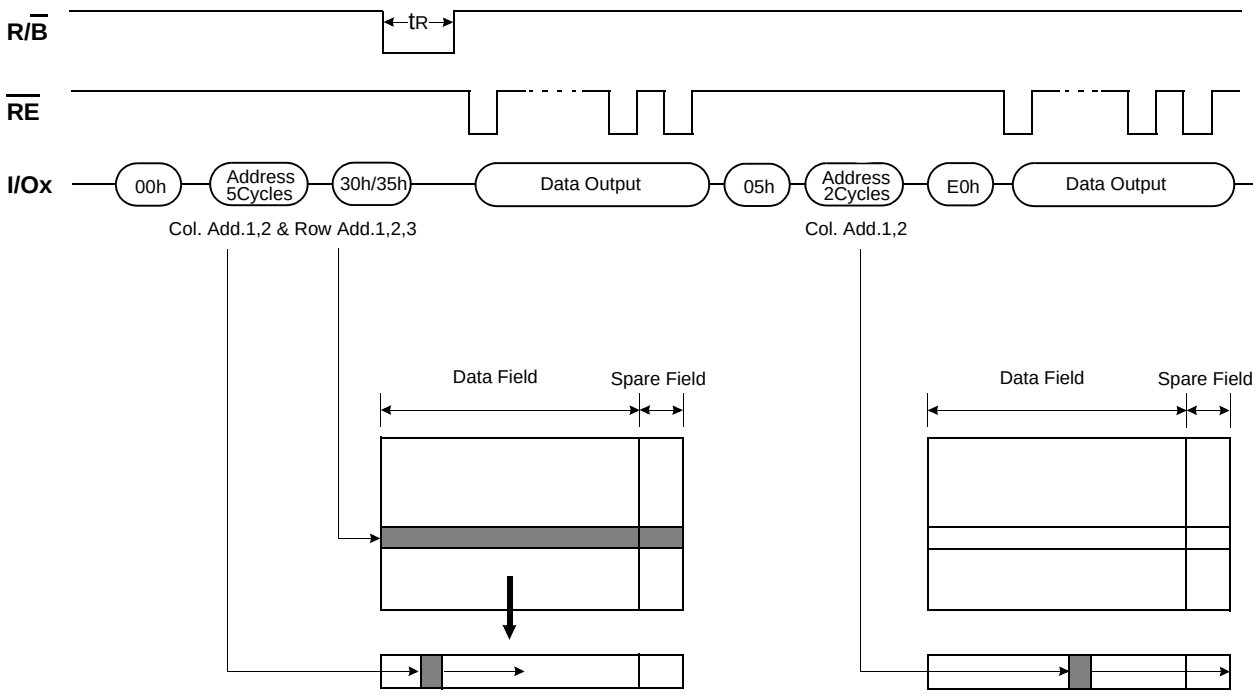

5.2 Cache Read

Cache Read is an extension of Page Read, which is executed with 8,832byte data registers, and is available only within a block. Since the device has 1 page of cache memory, serial data output may be executed while data in the memory cell is read into data registers.

Cache read is also initiated by writing 00h-30h to the command register along with five address cycles. After initial power up, 00h command is latched. Therefore only five address cycles and 30h command initiates that operation after initial power up. The 8,832 bytes of data within the selected page are transferred to the cache registers via data registers in less than tR. After issuing Cache Read command(31h), read data in the data registers is transferred to cache registers for a short period of time(t_{DCBSYR}). While the data in the cache registers is read out in Read cycle time(tRC) by sequentially pulsing $\overline{RE}$, data of next page is transferred to the data registers. By issuing Last Cache Read command(3Fh), last data is transferred to the cache registers from the data registers after the completion of transfer from memory cell to data registers.

Cache Read

The device has a Read operation with cache registers that enables the high speed read operation shown below. When the block address changes, this sequence has to be started from the beginning.

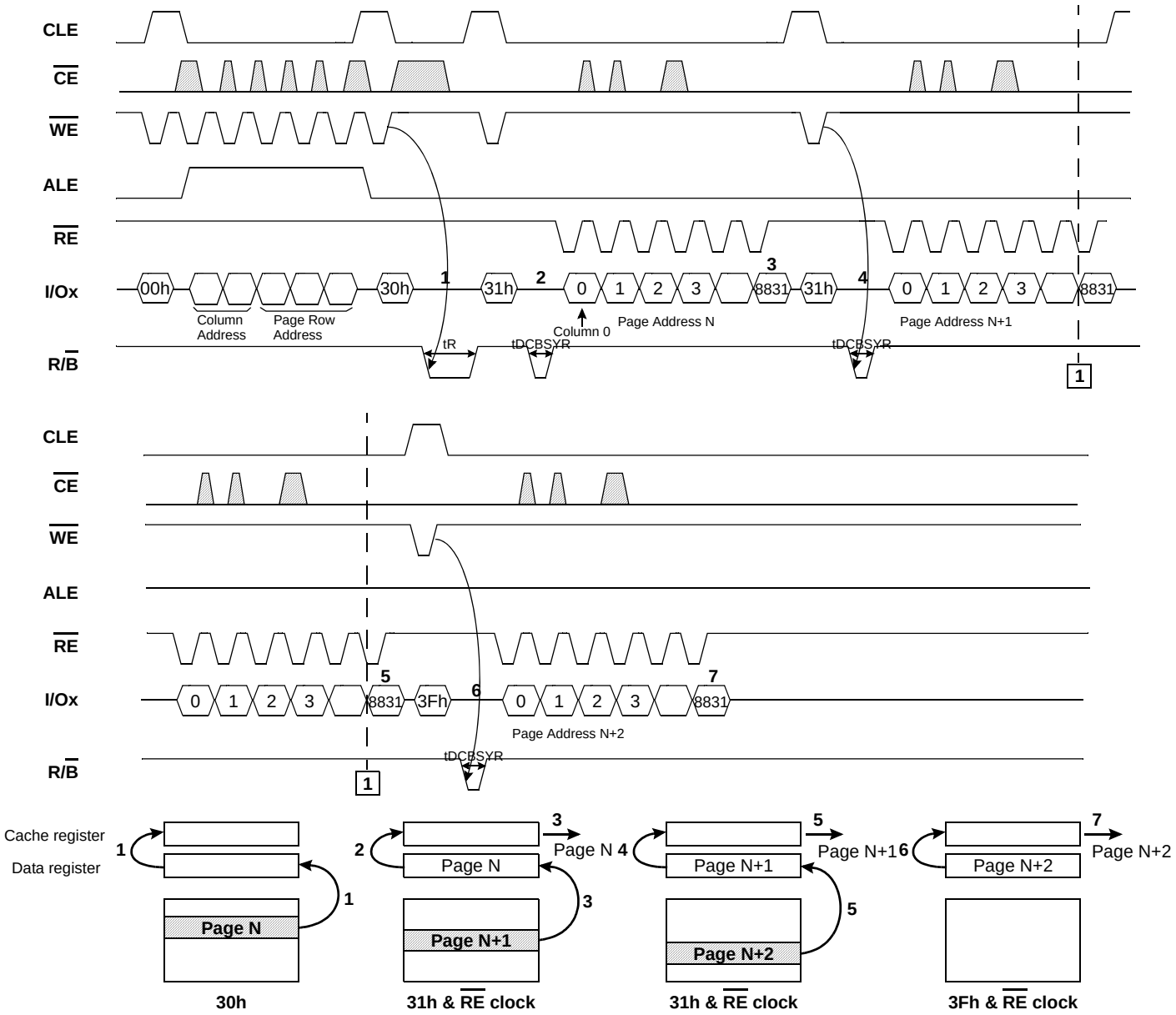

NOTE :
-. If the 31h command is issued to the device, the data content of the next page is transferred to the data registers during serial data out from the cache registers, and therefore the tR (Data transfer from memory cell to data register) will be reduced.

1) Normal read. Data is transferred from Page N to cache registers through data registers. During this time period, the device outputs Busy state for tR max.
2) After the Ready/Busy returns to Ready, 31h command is issued and data is transferred to cache registers from data registers again. This data transfer takes tDCBSYR max and the completion of this time period can be detected by Ready/Busy signal.
3) Data of Page N+1 is transferred to data registers from cell while the data of Page N in cache registers can be read out by $\overline{RE}$ clock simultaneously.
4) The 31h command makes data of Page N+1 transfer to cache registers from data registers after the completion of the transfer from cell to data registers. The device outputs Busy state for tDCBSYR max..This Busy period depends on the combination of the internal data transfer time from cell to data registers and the serial data out time.
5) Data of Page N+2 is transferred to data registers from cell while the data of Page N+1 in cache registers can be read out by $\overline{RE}$ clock simultaneously.
6) The 3Fh command makes the data of Page N+2 transfer to the cache registers from the data registers after the completion of transfer from cell to data registers. The device outputs Busy state for tDCBSYR max.This Busy period depends on the combination of the internal data transfer time from cell to data registers and the transfer from data registers to cache registers.
7) Data of Page N+2 in cache registers can be read out, but since the 3Fh command does not transfer the data from the memory cell to data registers, the device can accept new command input immediately after the completion of serial data out.

5.3 Two-plane Page Read

Two-Plane Page Read is an extension of Page Read, for a single plane with 8,832 byte data registers. Since the device is equipped with two memory planes, activating the two sets of 8,832 byte data registers enables a random read of two pages. Two-Plane Page Read is initiated by repeating command 60h followed by three address cycles twice. In this case, only same page of same block can be selected from each plane.
After Read Confirm command(30h) the 17,664 bytes of data within the selected two page are transferred to the cache registers via data registers in less than tR. The system controller can detect the completion of data transfer(tR) by monitoring the output of R/$\overline{B}$ pin.
Once the data is loaded into the cache registers, the data output of first plane can be read out by issuing command 00h with Five Address Cycles, command 05h with two column address and finally E0h. The data output of second plane can be read out using the identical command sequences. Two-Plane Page Read must be used in the block which has been programmed with Two-Plane Page Program.

Two-Plane Page Read Operation with Two-Plane Random Data Out

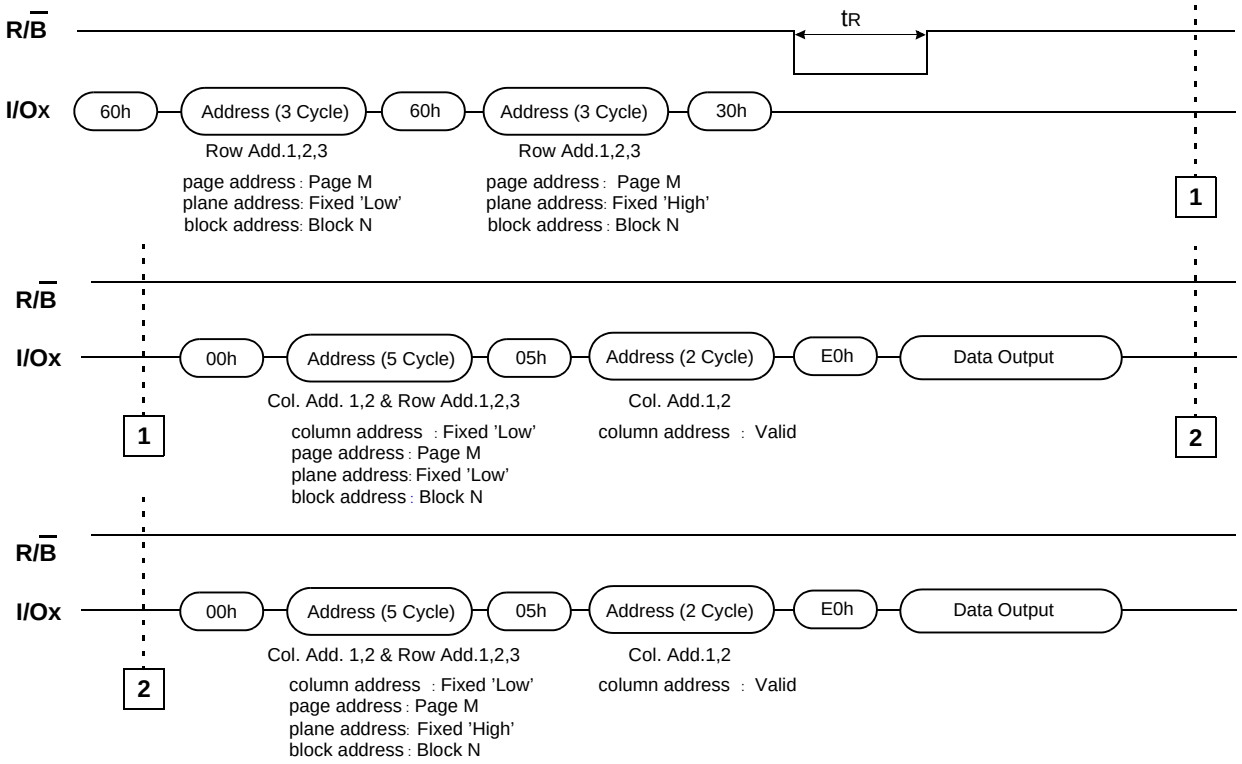

5.4 Two-plane Cache Read

Two-Plane Cache Read is an extension of Cache Read, for a single plane with 8,832 byte data registers. Since the device is equipped with two memory planes, activating the two sets of 8,832 byte data registers enables a cache read of two pages. Two-Plane Cache Read is initiated by repeating command 60h followed by three address cycles twice. In this case only same page of same block can be selected from each plane.
After Read Confirm command(33h) the 17,664 bytes of data within the selected two page are transferred to the cache registers via data registers in less than tR. After issuing Cache Read command(31h), read data in the data registers is transferred to cache registers for a short period of time(tDCBSYR). Once the data is loaded into the cache registers from data registers, the data output of first plane can be read out by issuing command 00h with Five Address Cycles, command 05h with two column address and finally E0h. The data output of second plane can be read out using the identical command sequences. The detail sequence of Two-Plane Cache Read is shown below.

Two-Plane Cache Read Operation with Two-Plane Random Data Out

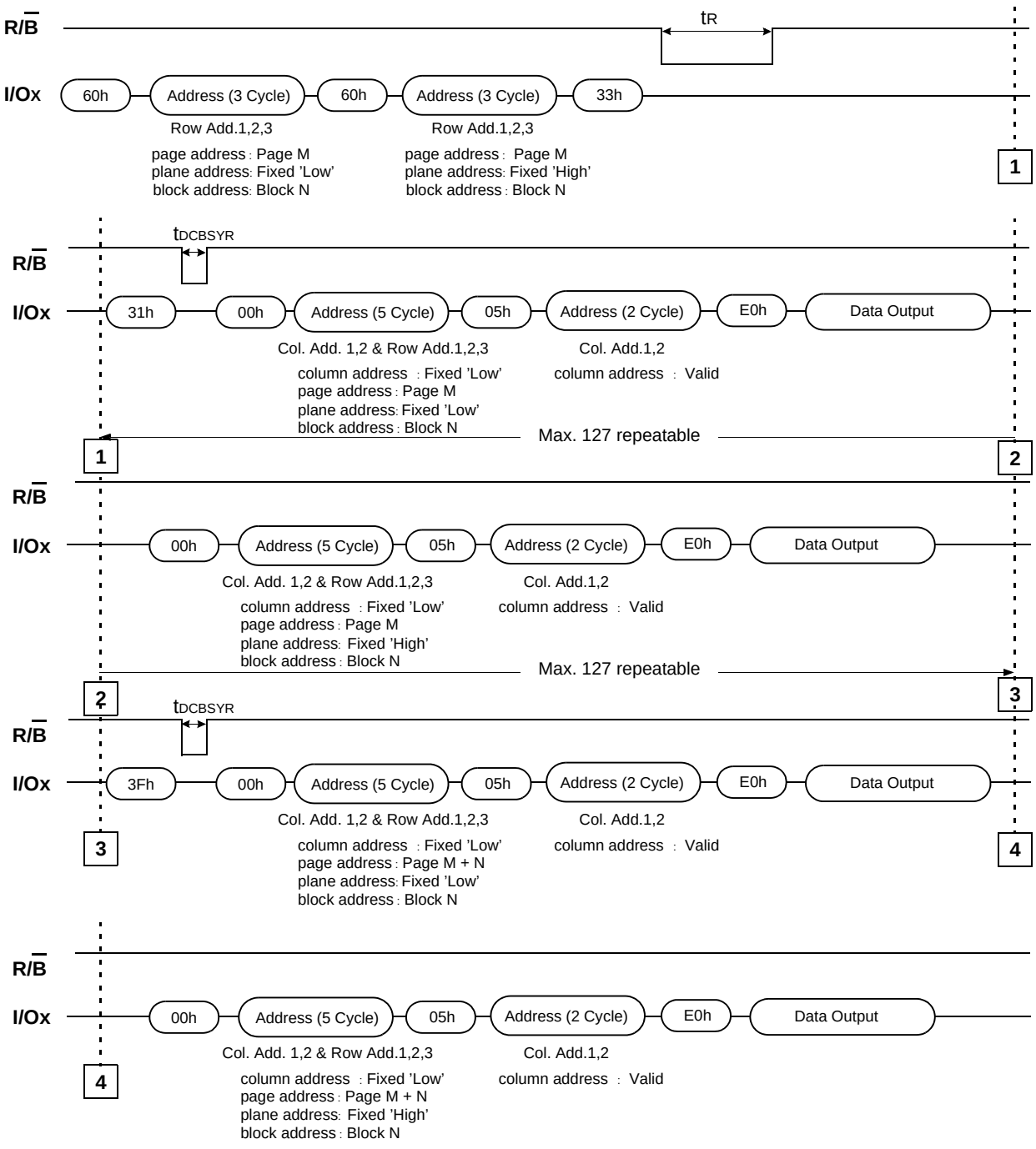

5.5 Page Program

The device is programmed basically on a page basis, and the number of consecutive partial page programming operation within the same page without an intervening erase operation must not exceed 1 time for the page. The addressing should be done in sequential order in a block. A page program cycle consists of a serial data loading period in which up to 8,832bytes of data may be loaded into the data registers via cache registers, followed by a non-volatile programming period where the loaded data is programmed into the appropriate cell.
The serial data loading period begins by inputting the Serial Data Input command(80h), followed by the five cycle address inputs and then serial data loading. The words other than those to be programmed do not need to be loaded. The device supports random data input in a page. The column address for the next data, which will be entered, may be changed to the address which follows random data input command(85h). Random data input may be operated multiple times regardless of how many times it is done in a page.
The Page Program confirm command(10h) initiates the programming process. Writing 10h alone without previously entering the serial data will not initiate the programming process. The internal write state controller automatically executes the algorithms and timings necessary for program and verify, thereby freeing the system controller for other tasks. Once the program process starts, the Read Status Register command may be entered to read the status register. The system controller can detect the completion of a program cycle by monitoring the R/$\overline{B}$ output, or the Status bit(I/O 6) of the Status Register. Only the Read Status command and Reset command are valid while programming is in progress. When the Page Program is complete, the Write Status Bit(I/O 0) may be checked. The internal write verify detects only errors for "1"s that are not successfully programmed to "0"s. The command register remains in Read Status command mode until another valid command is written to the command register.

Program & Read Status Operation

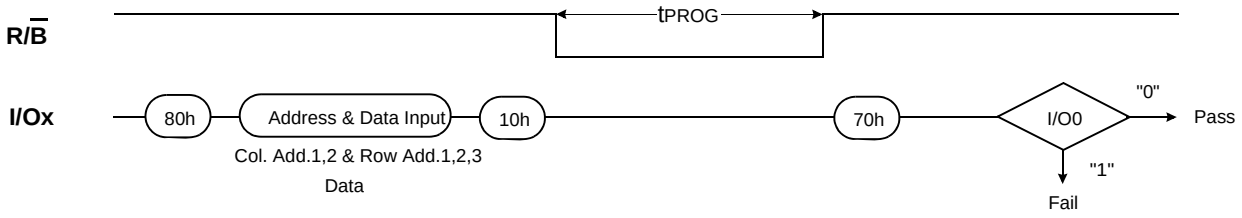

Random Data Input In a Page

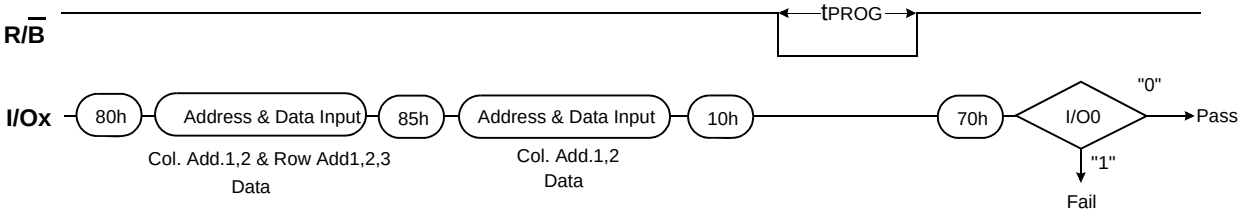

5.6 Copy-back Program

Copy-Back program with Read for Copy-Back is configured to quickly and efficiently rewrite data stored in one page without data re-loading when the bit error is not in data stored. Since the time-consuming re-loading cycles are removed, the system performance is improved. The benefit is especially obvious when a portion of a block is updated and the rest of the block also needs to be copied to the newly assigned free block. Copy-Back operation is a sequential execution of Read for Copy-Back and of copy-back program with the destination page address. A read operation with "35h" command and the address of the source page moves the whole 8,832byte data into the internal data buffer. A bit error is checked by sequential reading the data output. In the case where there is no bit error, the data do not need to be reloaded. Therefore Copy-Back program operation is initiated by issuing Page-Copy Data-Input command (85h) with destination page address. Actual programming operation begins after Program Confirm command (10h) is issued. Once the program process starts, the Read Status Register command (70h) may be entered to read the status register. The system controller can detect the completion of a program cycle by monitoring the R/$\overline{B}$ output, or the Status bit(I/O 6) of the Status Register. When the Copy-Back Program is complete, the Write Status Bit(I/O 0) may be checked. The command register remains in Read Status command mode until another valid command is written to the command register.
During copy-back program, data modification is possible using random data input command (85h) as shown below.

Page Copy-Back Program Operation

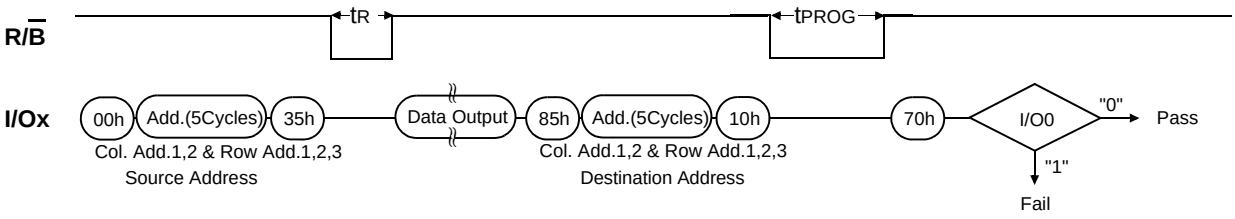

NOTE :
1) Copy-Back Program operation is allowed only within the same memory plane.

Page Copy-Back Program Operation with Random Data Input

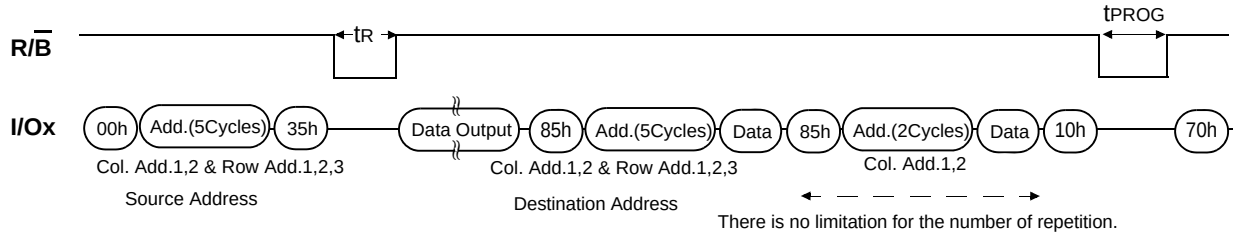

5.7 Intelligent Copy-Back Program

Intelligent Page Copy-Back Program Operation

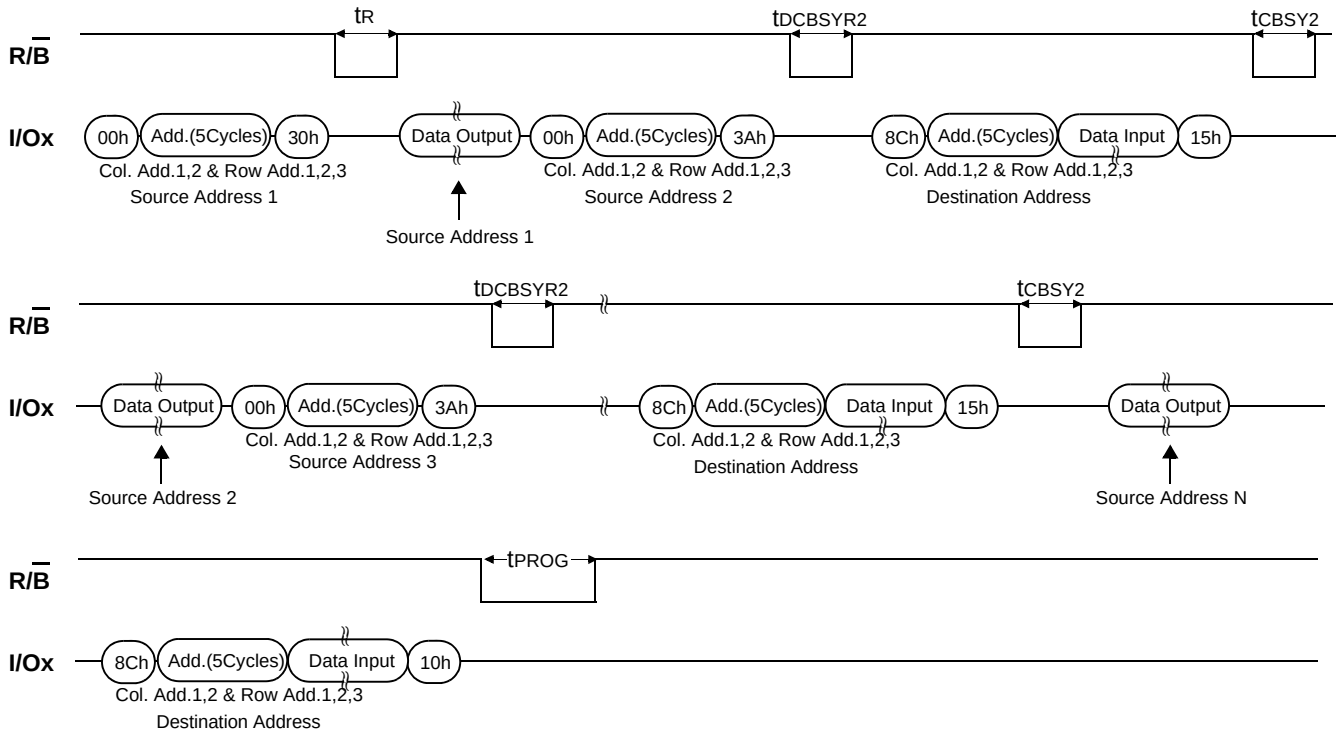

NOTE :
1) Intelligent Copy-Back Program operation is allowed only within the same memory plane.

5.8 Cache Program

Cache Program is an extension of Page Program, which is executed with 8,832byte data registers, and is available only within a block. Since the device has 1 page of cache memory, serial data input may be executed while data stored in data registers are programmed into memory cell.

After writing the first set of data up to 8,832byte into the selected cache registers, Cache Program command (15h) instead of actual Page Program (10h) is inputted to make cache registers free and to start internal program operation. To transfer data from cache registers to data registers, the device remains in Busy state for a short period of time(tCBSY) and has its cache registers ready for the next data-input while the internal programming gets started with the data loaded into data registers. Read Status command (70h) may be issued to find out when cache registers become ready by polling the Cache-Busy status bit(I/O 6). Pass/fail status of only the previous page is available upon the return to Ready state. When the next set of data is inputted with the Cache Program command, tCBSY is affected by the progress of pending internal programming. The programming of the cache registers is initiated only when the pending program cycle is finished and the data registers are available for the transfer of data from cache registers. The status bit(I/O5) for internal Ready/Busy may be polled to identify the completion of internal programming. If the system monitors the progress of programming only with R/$\overline{B}$, the last page of the target programming sequence must be programmed with actual Page Program command (10h).

Cache Program(1/2)

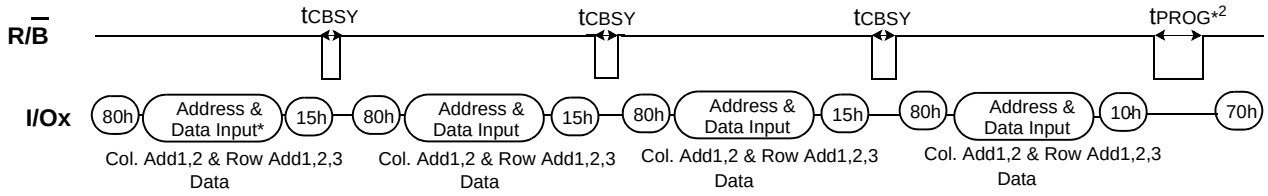

NOTE :
1) Cache Program operation is available only within a block.
2) Since programming the last page does not employ caching, the program time has to be that of Page Program. However, if the previous program cycle with the cache data has not finished, the actual program cycle of the last page is initiated only after completion of the previous cycle, which can be expressed as the following formula.
tPROG = Program time for the last page + Program time for the (last -1)th page - (Program command cycle time + Last page data loading time)
Maximum tPROG is 10ms in this case.

Cache Program(2/2)

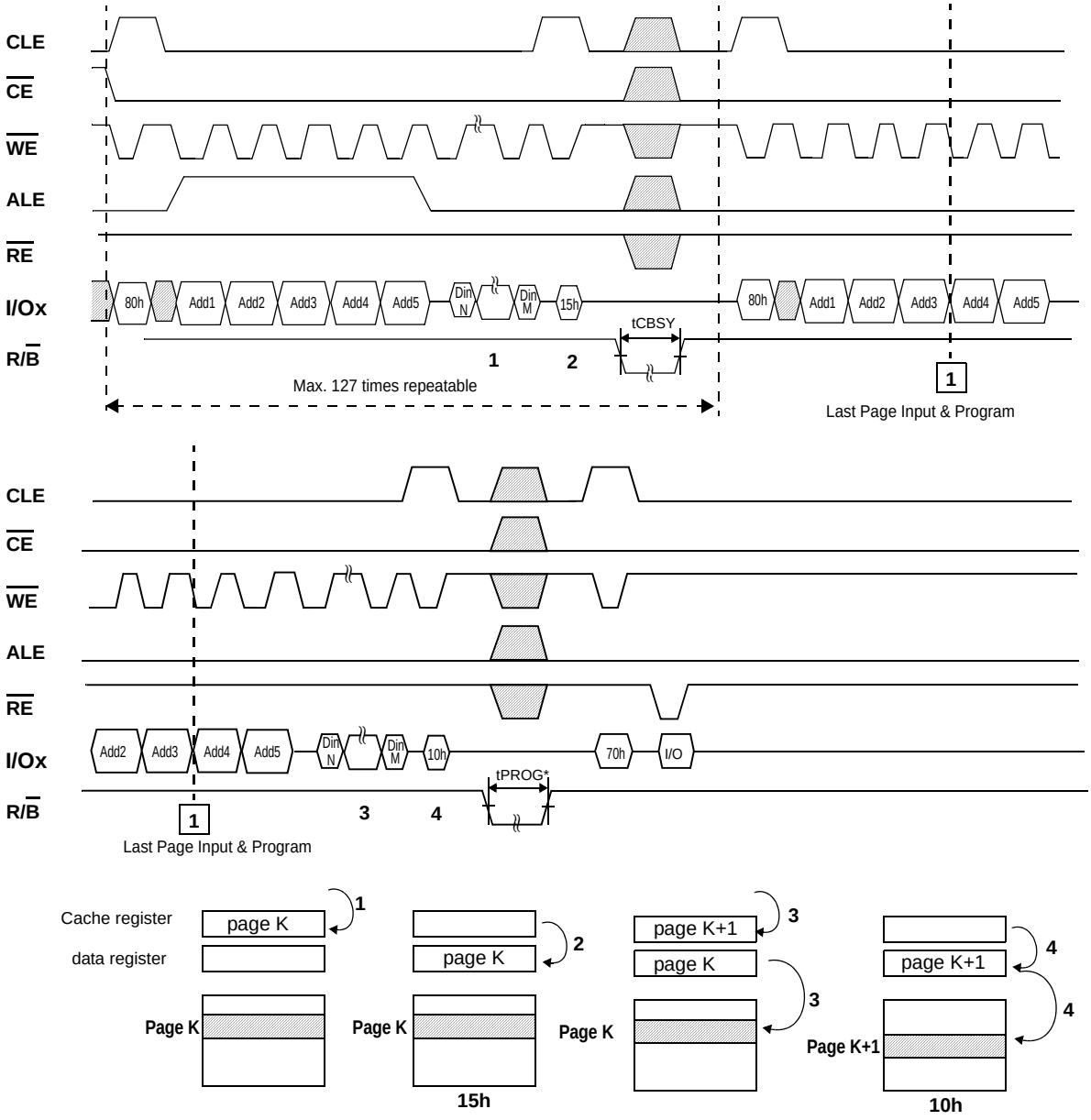

NOTE :

- Issuing the 15h command to the device after serial data input initiates the program operation with cache registers.

1) Data for Page K is input to cache registers.
2) Data is transferred to the data registers by the 15h command. During the transfer the Ready/Busy outputs Busy State (tCBSY).
3) Data for Page K+1 is input to cache registers while the data of the Page K is being programmed.
4) The programming with cache registers is terminated by the 10h command . When the device becomes Ready, it shows that the internal programming of the Page K+1 is completed.

tPROG* = Program time for the last page + Program time for the (last -1)th page - (command input cycle time + address input cycle time + Last page data loading time)
Maximum tPROG is 10ms in this case.

Pass/Fail status for each page programmed by the Cache Program operation can be detected by the Read Status operation.

- I/O 0 : Pass/Fail of the current page program operation.
- I/O 1 : Pass/Fail of the previous page program operation.

The Pass/Fail status on I/O 0 and I/O 1 are valid under the following conditions.

- Status on I/O 0 : True Ready/Busy is Ready state.
  The True Ready/Busy is output on I/O 5 by Read Status operation or R/$\overline{B}$ pin after the 10h command.
- Status on I/O 1 :Cache Read/Busy is Ready State.
  The Cache Ready/Busy is output on I/O 6 by Read Status operation or R/$\overline{B}$ pin after the 15h command.

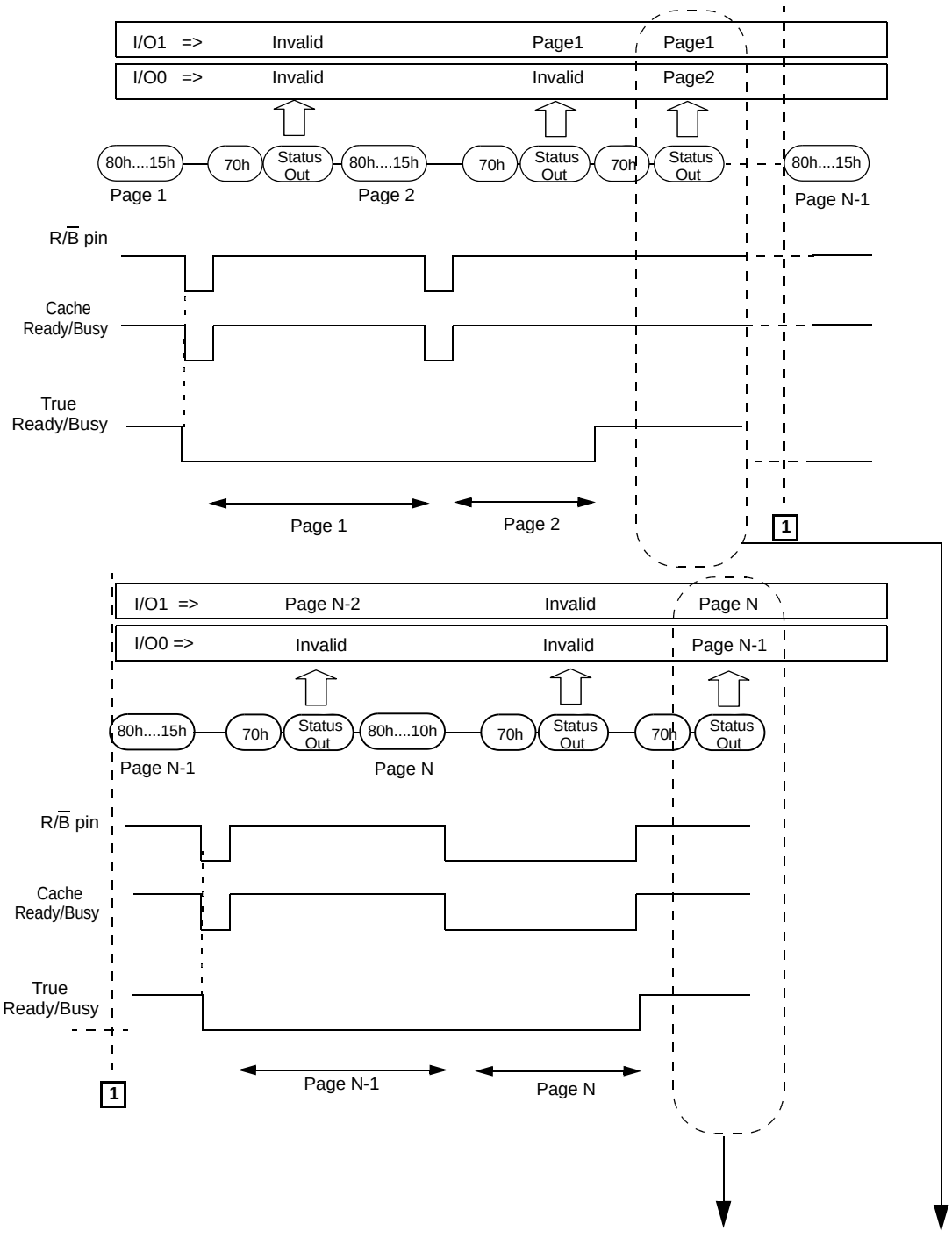

During both True Ready/Busy and Cache Ready/Busy return to Ready state, the Pass/Fail for previous page and current page can be shown through I/O 1 and I/O 0 concurrently.

5.9 Register Read Out Mode 1

At program operation, loaded data to the register can be read out before program confirm command(10h). The sequence is as follow.

Register Read Out

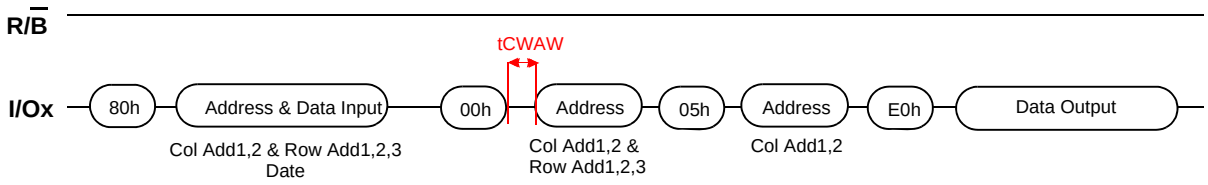

NOTE :
Register read out operation is prohibited during cache program operation.

5.10 Register Read Out Mode 2

If program operation ended in fail, programmed data in fail can be read out from the register. The sequence is as follow.

Register Read Out

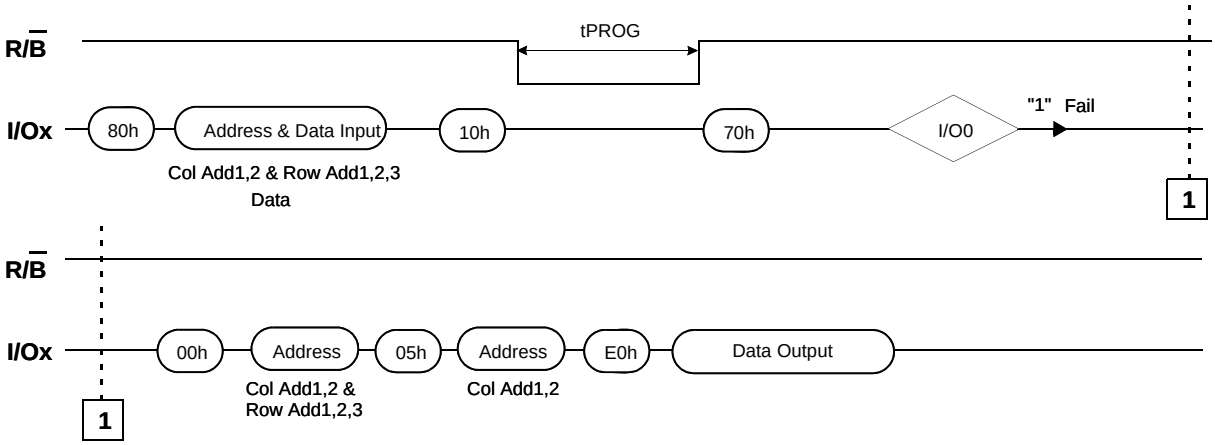

NOTE :
Register read out operation is prohibited during cache program operation.

5.11 Two-plane Register Read Out Mode 1

At two-plane program operation, loaded data to the register can be read out before program confirm command(10h). The sequence is as follow.

Two-Plane Register Read Out Mode 1

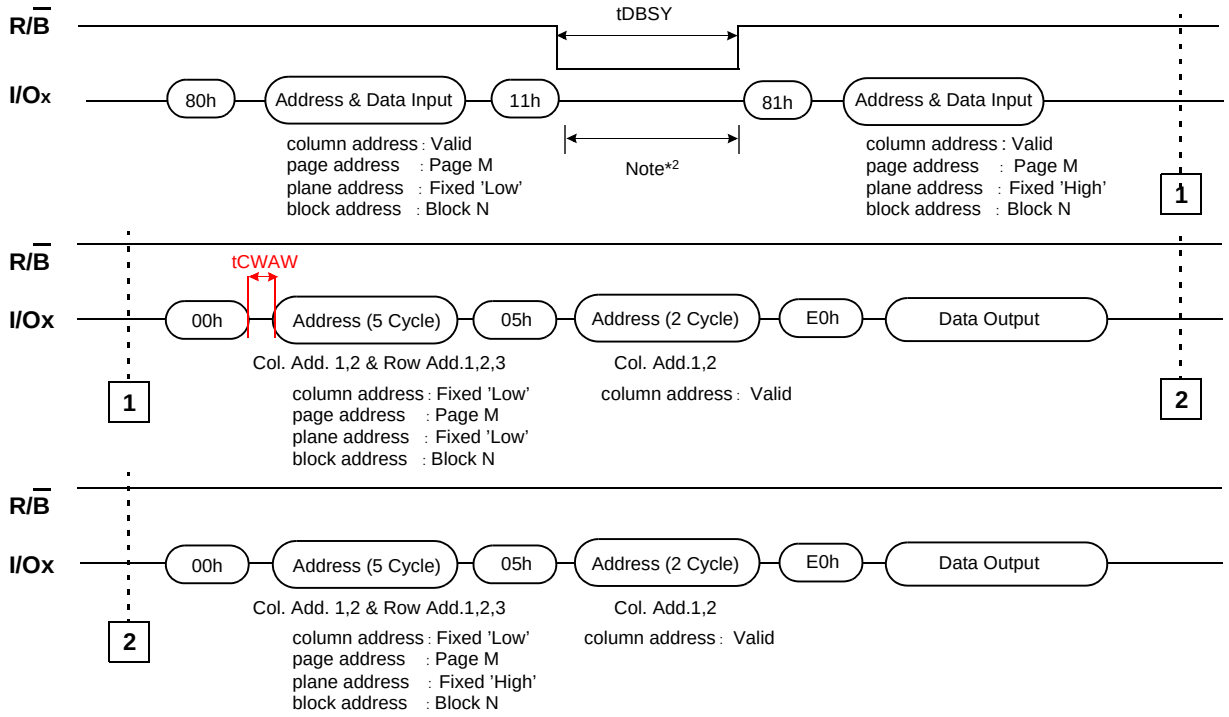

NOTE :
1) It is noticeable that physically same row address is applied to two planes .
2) Any command between 11h and 81h is prohibited except 70h/F1h and FFh.
3) Register read out operation is prohibited during cache program operation.

5.12 Two-plane Register Read Out Mode 2

If two-plane program operation ended in fail, programmed data in fail can be read out from the register. The sequence is as follow.

Two-Plane Register Read Out Mode 2

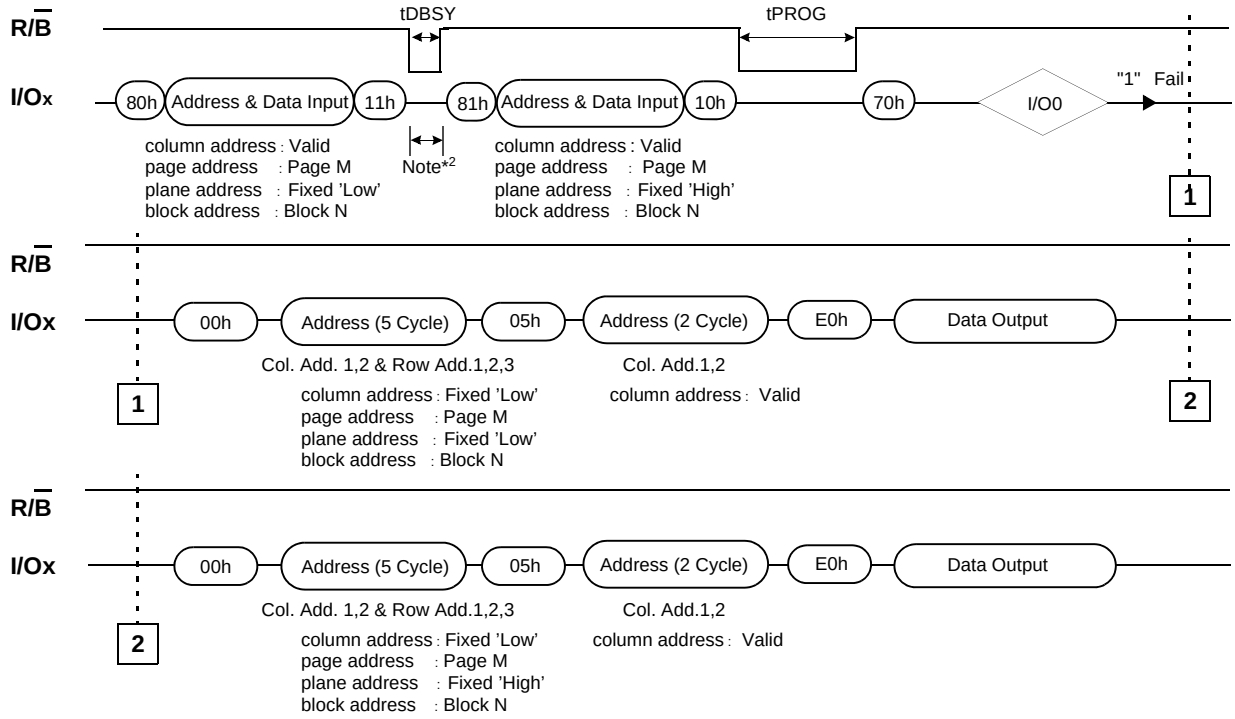

NOTE :
1) It is noticeable that physically same row address is applied to two planes .
2) Any command between 11h and 81h is prohibited except 70h/F1h and FFh.
3) Register read out operation is prohibited during cache program operation.

5.13 Two-plane Page Program

Two-Plane Page Program is an extension of Page Program, for a single plane with 8,832 byte data registers. Since the device is equipped with two memory planes, activating the two sets of 8,832 byte data registers enables a simultaneous programming of two pages.
After writing the first set of data up to 8,832 byte into the selected data registers via cache registers, Dummy Page Program command (11h) instead of actual Page Program command (10h) is inputted to finish data-loading of the first plane. Since no programming process is involved, R/$\overline{B}$ remains in Busy state for a short period of time(tDBSY). Read Status command (70h) may be issued to find out when the device returns to Ready state by polling the Ready/Busy status bit(I/O 6). Then the next set of data for the other plane is inputted after the 81h command and address sequences. After inputting data for the last plane, actual True Page Program(10h) instead of dummy Page Program command (11h) must be followed to start the programming process. The operation of R/$\overline{B}$ and Read Status is the same as that of Page Program. Although two planes are programmed simultaneously, pass/fail is not available for each page when the program operation completes. Status bit of I/O 0 is set to "1" when any of the pages fails.
Restriction in addressing with Two-Plane Page Program is shown below.

Two-Plane Page Program

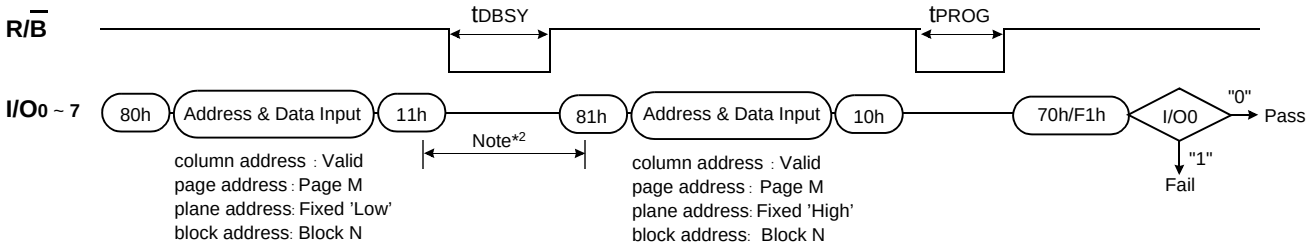

NOTE :
1) It is noticeable that same row address except for the Plane address is applied to the two blocks
2) Any command between 11h and 81h is prohibited except 70h/F1h and FFh.

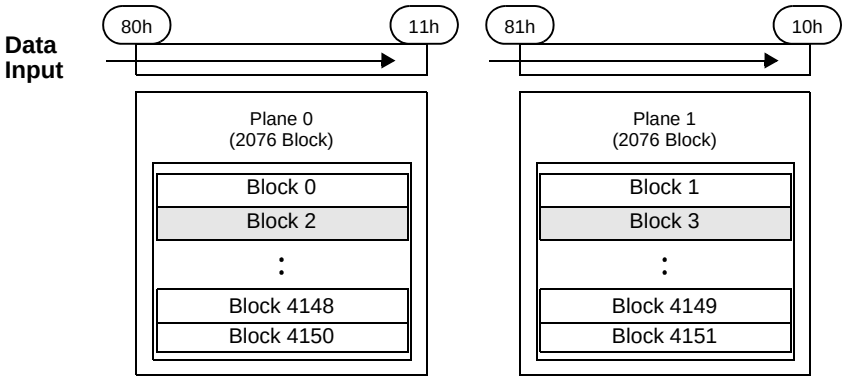

5.14 Two-plane Copy-back Program

Two-Plane Copy-Back Program is an extension of Copy-Back Program, for a single plane with 8,832 byte data registers. Since the device is equipped with two memory planes, activating the two sets of 8,832 byte data registers enables a simultaneous programming of two pages.

Two-Plane Copy-Back Program Operation

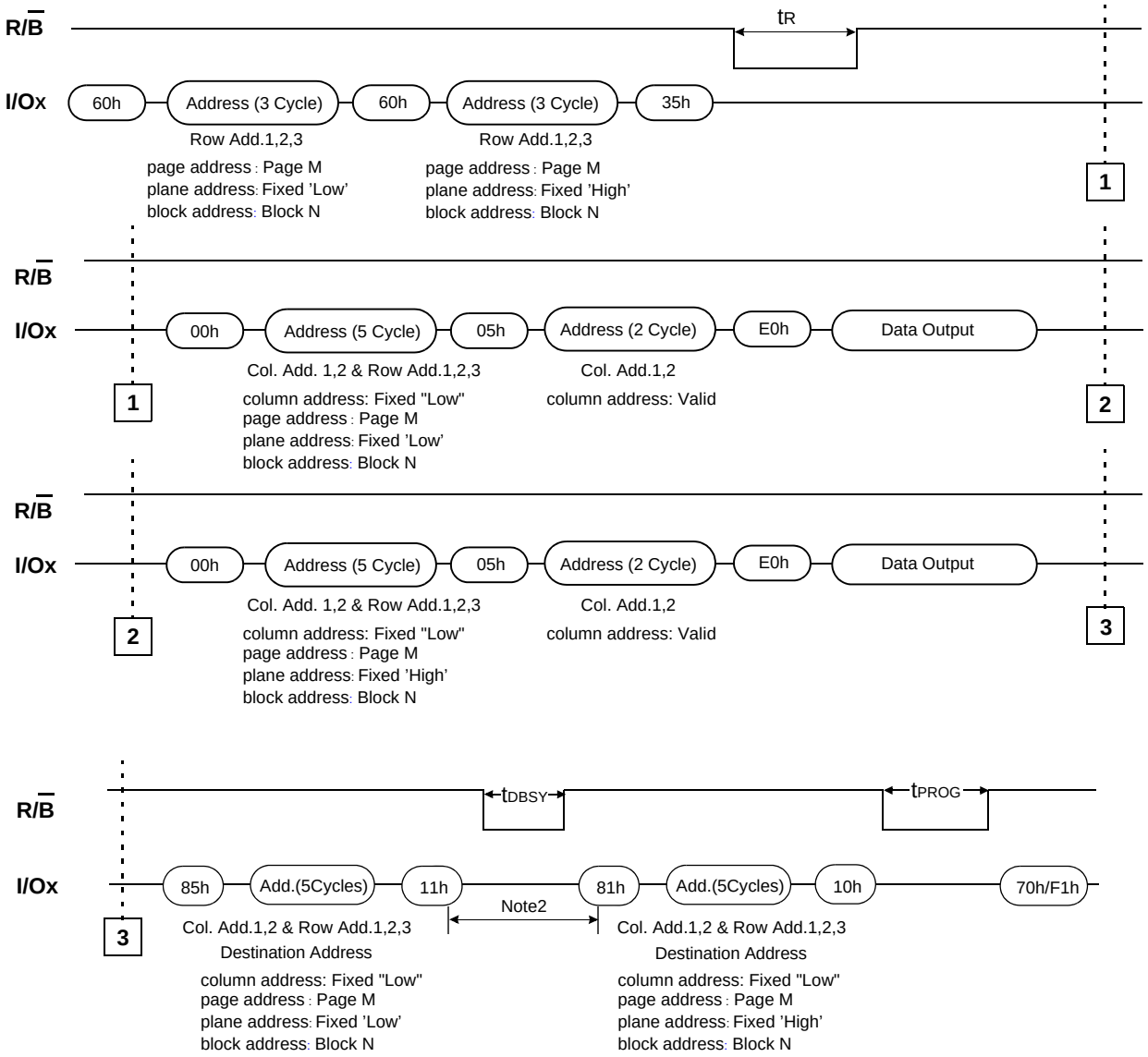

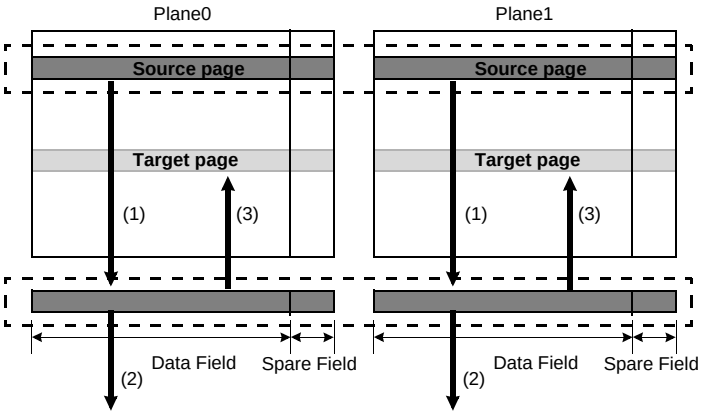

(1) : Two-Plane Read for Copy Back
(2) : Two-Plane Random Data Out
(3) : Two-Plane Copy-Back Program

NOTE :
1) Copy-Back Program operation is allowed only within the same memory plane.
2) Any command between 11h and 81h is prohibited except 70h/F1h and FFh.

Two-Plane Copy-Back Program Operation with Random Data Input

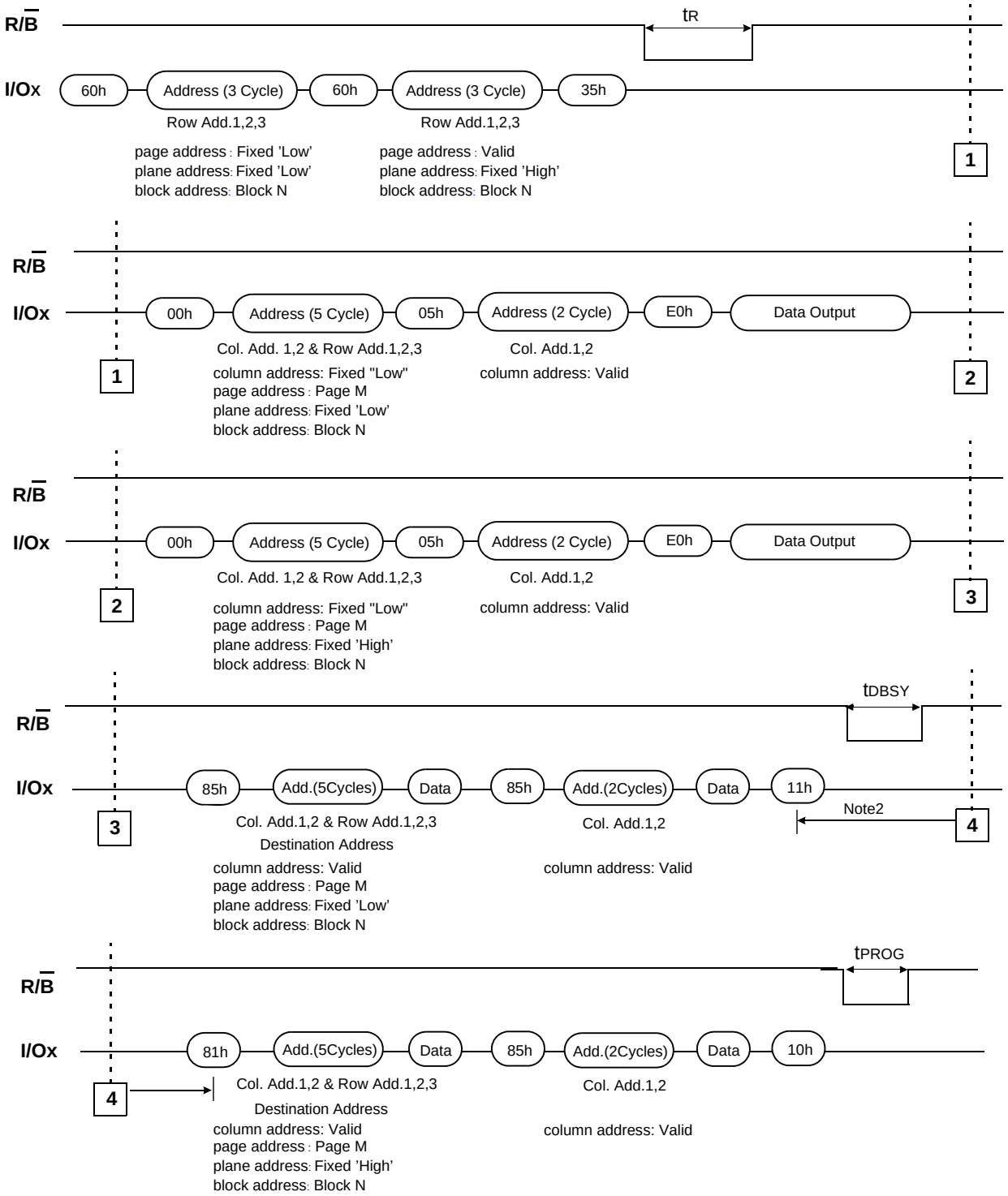

NOTE :
1) Copy-Back Program operation is allowed only within the same memory plane.
2) Any command between 11h and 81h is prohibited except 70h/F1h and FFh.

5.15 Two-Plane Intelligent Copy-back Program(1/2)

Two-Plane Intelligent Copy-Back Program Operation

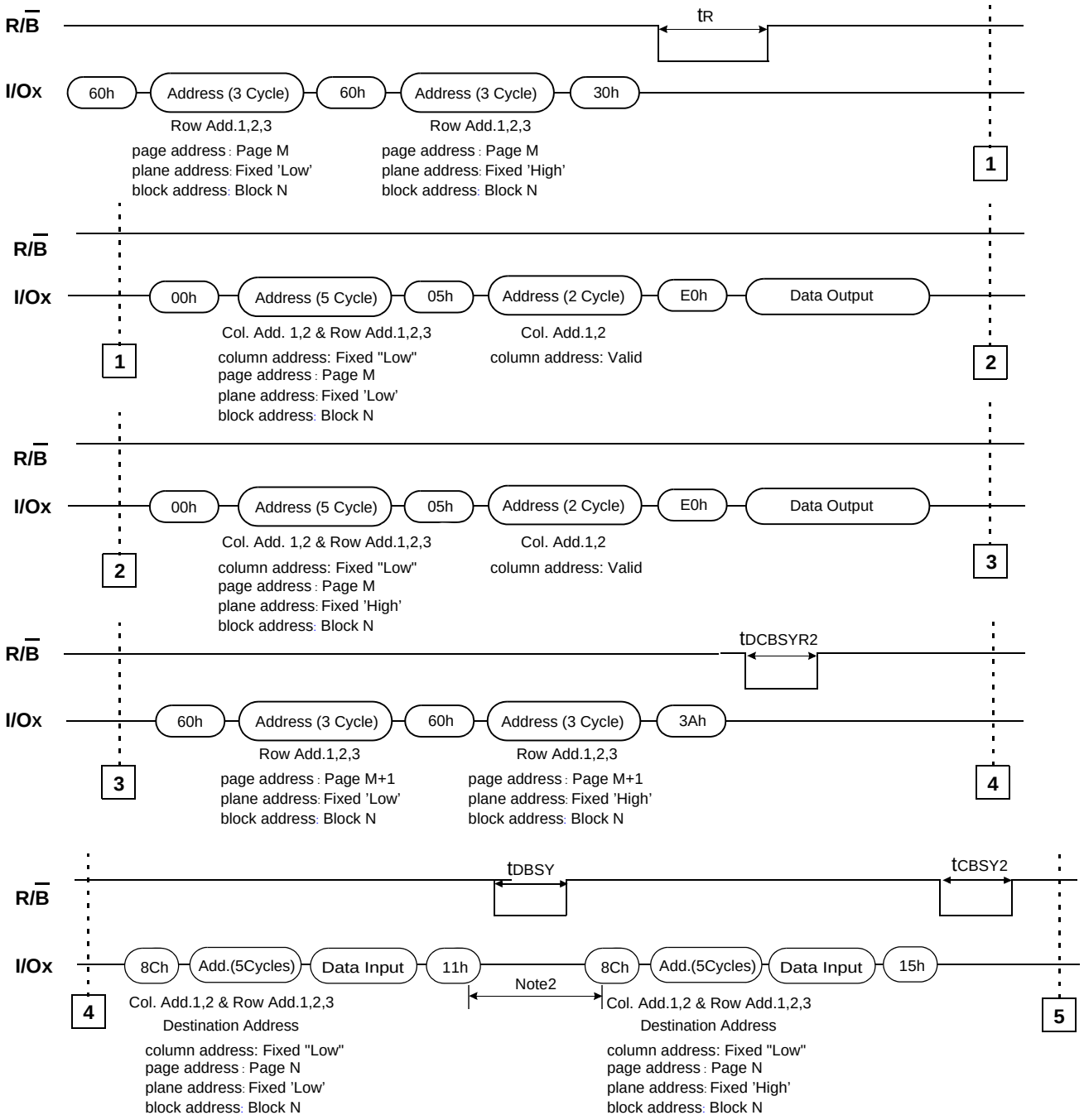

Two-Plane Intelligent Copy-back Program(2/2)

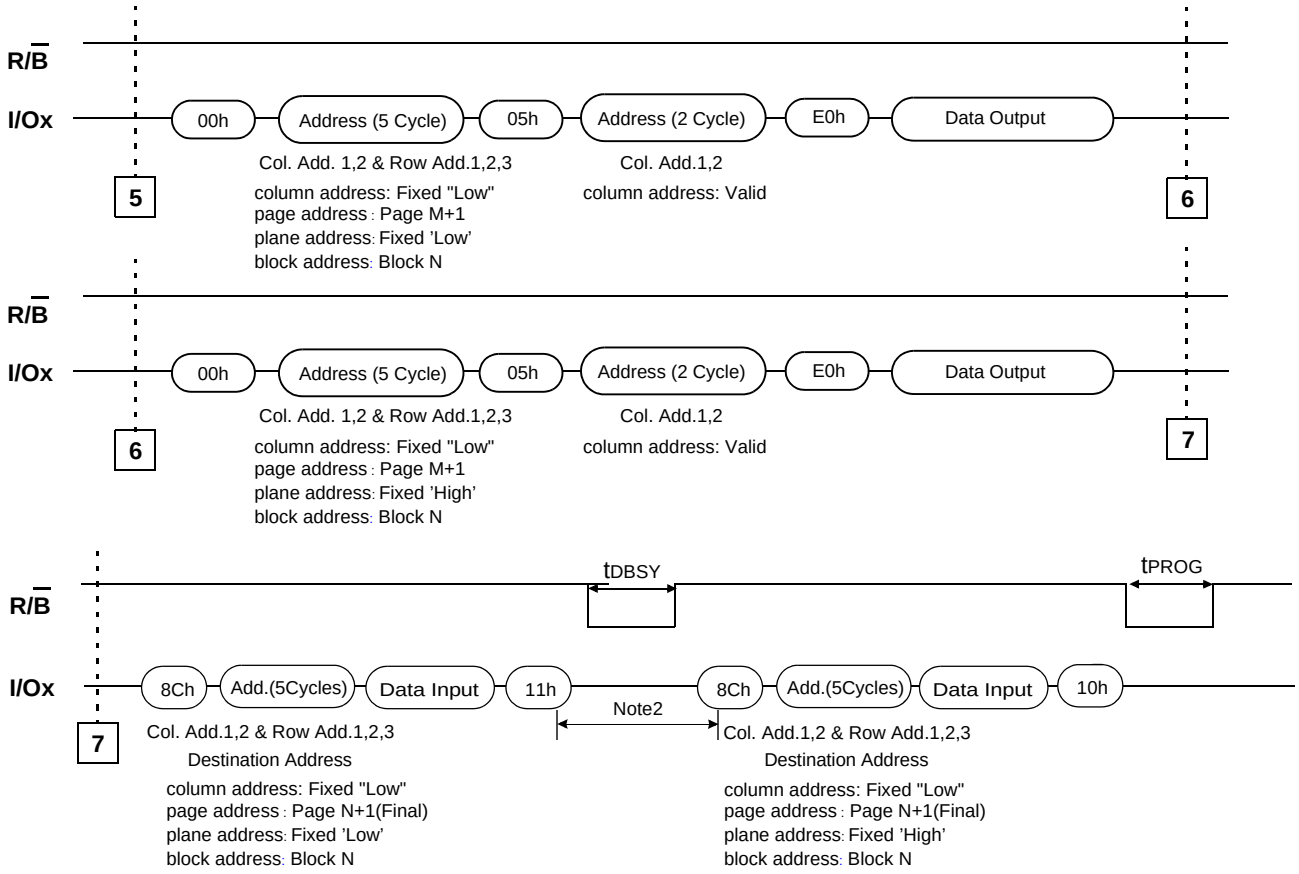

NOTE :
1) Two-Plane Intelligent Copy-Back Program operation is allowed only within the same memory plane.
2) Any command between 11h and 8Ch is prohibited except 70h/F1h and FFh.

Pass/Fail status for each page programmed by the Intelligent Copy-Back Program operation can be detected by the Read Status operation.

- I/O 0 : Pass/Fail of the current page program operation.
- I/O 1 : Pass/Fail of the previous page program operation.

The Pass/Fail status on I/O 0 and I/O 1 are valid under the following conditions.

- Status on I/O 0 : True Ready/Busy is Ready state.
  The True Ready/Busy is output on I/O 5 by Read Status operation or R/$\overline{B}$ pin after the 10h command.
- Status on I/O 1 :Cache Read/Busy is Ready State.
  The Cache Ready/Busy is output on I/O 6 by Read Status operation or R/$\overline{B}$ pin after the 15h command.

CASE 1

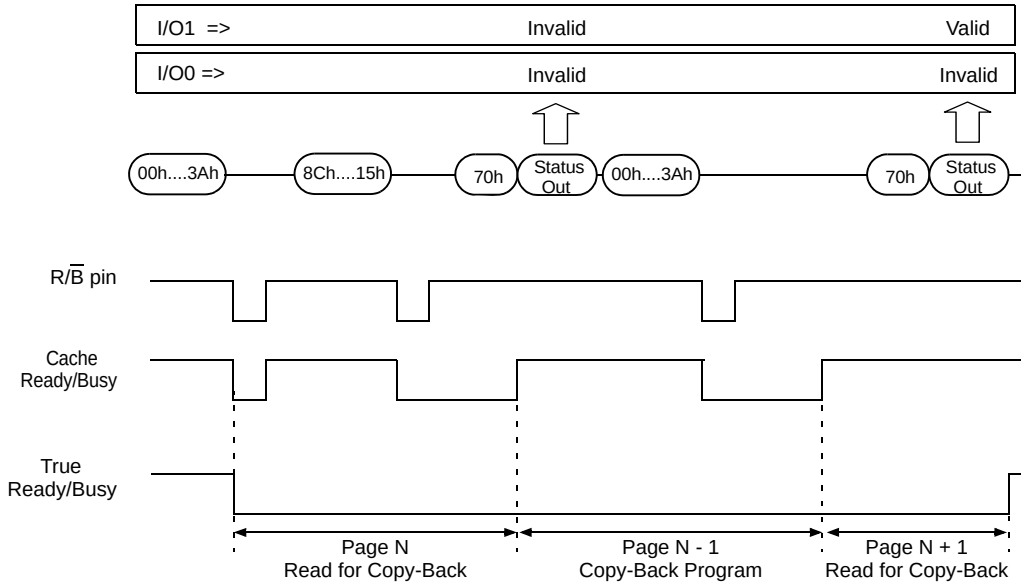

CASE 2

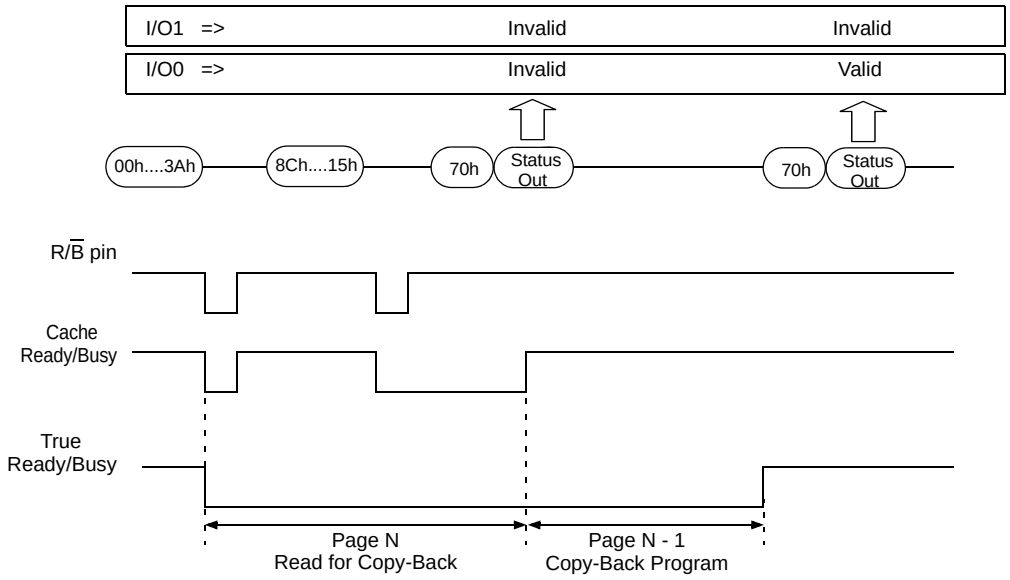

5.16 Two-plane Cache Program

Two-Plane Cache Program is an extension of Cache Program, for a single plane with 8,832 byte data registers. Since the device is equipped with two memory planes, activating the two sets of 8,832 byte data registers enables a simultaneous programming of two pages.

Two-Plane Cache Program Operation

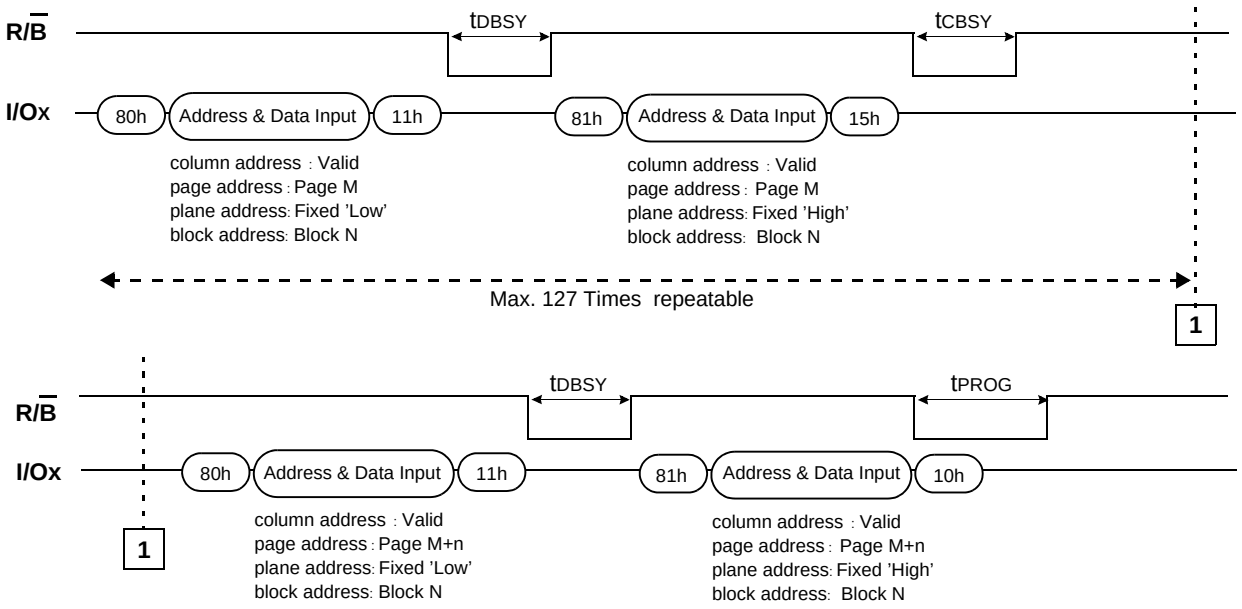

NOTE :
1) It is noticeable that same row address except for A20 is applied to the two blocks
2) Any command between 11h and 81h is prohibited except 70h/F1h and FFh.
3) Since programming the last page does not employ caching, the program time has to be that of Page Program. However, if the previous program cycle with the cache data has not finished, the actual program cycle of the last page is initiated only after completion of the previous cycle, which can be expressed as the following formula.
tPROG = Program time for the last page + Program time for the (last -1)th page
- (Program command cycle time + Last page data loading time)

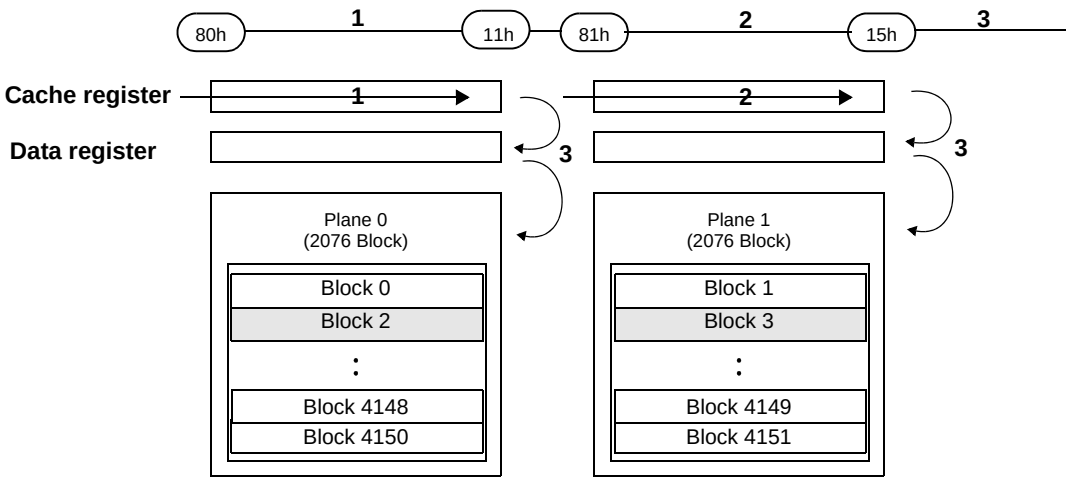

5.17 Block Erase

The Erase operation is done on a block basis. Block address loading is accomplished in three cycles initiated by an Erase Setup command(60h). Only Plane address and Block address are valid while Page address is ignored. The Erase Confirm command(D0h) following the block address loading initiates the internal erasing process. This two-step sequence of setup followed by execution command ensures that memory contents are not accidentally erased due to external noise conditions.
At the rising edge of $\overline{WE}$ after the erase confirm command input, the internal write controller handles erase and erase-verify. When the erase operation is completed, the Write Status Bit(I/O 0) may be checked.

Block Erase Operation

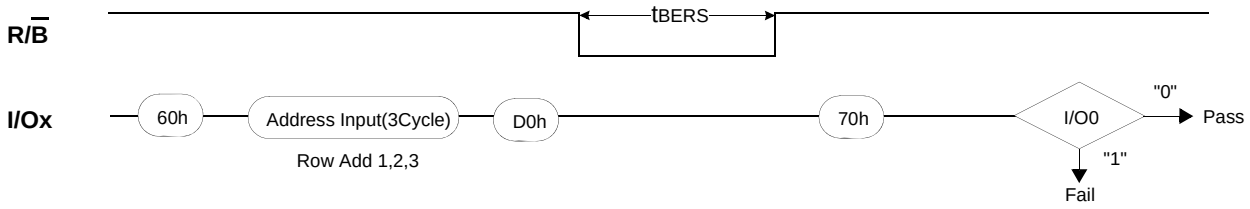

5.18 Two-plane Block Erase

Basic concept of Two-Plane Block Erase operation is identical to that of Two-Plane Page Program. Up to two blocks, one from each plane can be simultaneously erased. Standard Block Erase command sequences (Block Erase Setup command(60h) followed by three address cycles) may be repeated up to twice for erasing up to two blocks. Only one block should be selected from each plane. The Erase Confirm command(D0h) initiates the actual erasing process. The completion is detected by monitoring R/$\overline{B}$ pin or Ready/Busy status bit (I/O 6).

Two-Plane Block Erase Operation

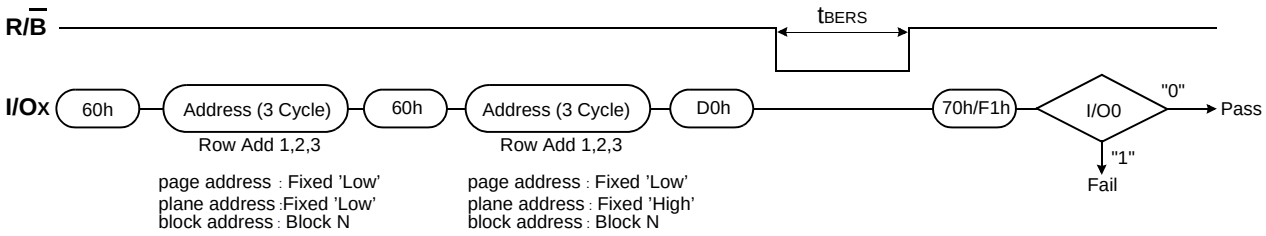

5.19 Read Status

The device contains a Status Register which may be read to find out whether program or erase operation is completed, and whether the program or erase operation is completed successfully. After writing 70h or F1h command to the command register, a read cycle outputs the content of the Status Register to the I/O pins on the falling edge of $\overline{CE}$ or $\overline{RE}$, whichever occurs last. This two line control allows the system to poll the progress of each device in multiple memory connections even when R/$\overline{B}$ pins are common-wired. $\overline{RE}$ or $\overline{CE}$ does not need to be toggled for updated status. Refer to the table for specific 70h Status Register definitions and F1h status Register definitions. The command register remains in Status Read mode until further commands are issued to it. Therefore, if the status register is read during a random read cycle, the read command(00h) should be given before starting read cycles.

Status Register Definition for 70h Command

I/O	Page Program	Block Erase	Cache Program	Intelligent Copy-Back Program	Read	Cache Read	Intelligent Copy-Back Read	Definition
I/O 0	Pass/Fail	Pass/Fail	Pass/Fail(N)	Pass/Fail(N)	Not Use	Not Use	Not Use	Pass : "0" Fail : "1"
I/O 1	Not Use	Not Use	Pass/Fail(N-1)	Pass/Fail(N-1)	Not Use	Not Use	Not Use	Pass : "0" Fail : "1"
I/O 2	Not Use	Not Use	Not Use	Not Use	Not Use	Not Use	Not Use	Don't -cared
I/O 3	Not Use	Not Use	Not Use	Not Use	Not Use	Not Use	Not Use	Don't -cared
I/O 4	Not Use	Not Use	Not Use	Not Use	Not Use	Not Use	Not Use	Don't -cared
I/O 5	Not Use	Not Use	True Ready/Busy	True Ready/Busy	Not Use	True Ready/Busy	True Ready/Busy	Busy : "0" Ready : "1"
I/O 6	Ready/Busy	Ready/Busy	Cache Ready/Busy	Cache Ready/Busy	Ready/Busy	Cache Ready/ Busy	Cache Ready/ Busy	Busy : "0" Ready : "1"
I/O 7	Write Protect	Write Protect	Write Protect	Write Protect	Write Protect	Write Protect	Write Protect	Protected : "0" Not Protected : "1"

NOTE :
1) I/Os defined 'Not use' are recommended to be masked out when Read Status is being executed.
2) N : current page, N-1: previous page.

Status Register Definition for F1h Command

I/O	Page Program	Block Erase	Cache Program	Intelligent Copy-Back Program	Read	Cache Read	Intelligent Copy-Back Read	Definition
I/O 0	Chip Pass/Fail	Chip Pass/Fail	Chip Pass/Fail(N)	Chip Pass/Fail(N)	Not Use	Not Use	Not Use	Pass : "0" Fail : "1"
I/O 1	Plane0 Pass/Fail	Plane0 Pass/Fail	Plane0 Pass/Fail(N)	Plane0 Pass/Fail(N)	Not Use	Not Use	Not Use	Pass : "0" Fail : "1"
I/O 2	Plane1 Pass/Fail	Plane1 Pass/Fail	Plane1 Pass/Fail(N)	Plane1 Pass/Fail(N)	Not Use	Not Use	Not Use	Pass : "0" Fail : "1"
I/O 3	Not Use	Not Use	Plane0 Pass/Fail(N-1)	Plane0 Pass/Fail(N-1)	Not Use	Not Use	Not Use	Pass : "0" Fail : "1"
I/O 4	Not Use	Not Use	Plane1 Pass/Fail(N-1)	Plane1 Pass/Fail(N-1)	Not Use	Not Use	Not Use	Pass : "0" Fail : "1"
I/O 5	Not Use	Not Use	True Ready/Busy	True Ready/Busy	Not Use	True Ready/Busy	True Ready/Busy	Busy : "0" Ready : "1"
I/O 6	Ready/Busy	Ready/Busy	Cache Ready/Busy	Cache Ready/Busy	Ready/Busy	Cache Ready/Busy	Cache Ready/Busy	Busy : "0" Ready : "1"
I/O 7	Write Protect	Write Protect	Write Protect	Write Protect	Write Protect	Write Protect	Write Protect	Protected : "0" Not Protected : "1"

NOTE :
1) I/Os defined 'Not use' are recommended to be masked out when Read Status is being executed.
2) N : current page, N-1 : previous page.

5.20 Read Id

The device contains a product identification mode, initiated by writing 90h to the command register, followed by an address input of 00h. Six read cycles sequentially output the manufacturer code(ECh), and the device code and 3rd, 4th, 5th, 6th cycle ID respectively. The command register remains in Read ID mode until further commands are issued to it.

Read ID Operation

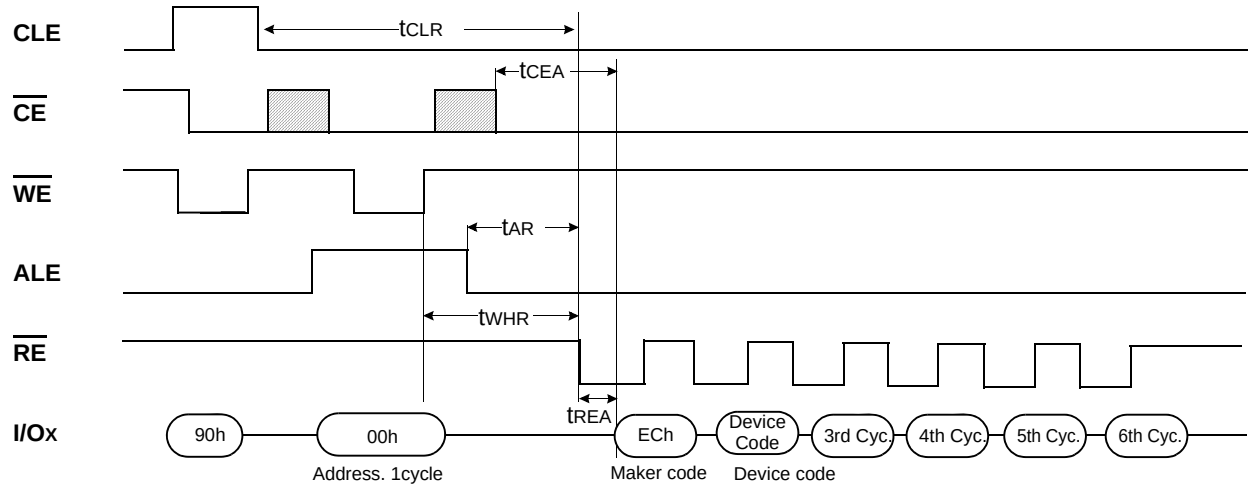

Device	Device Code (2nd Cycle)	3rd Cycle	4th Cycle	5th Cycle	6th Cycle
K9GBG08U0A	D7h	94h	76h	64h	43h
K9LCG08U1A					
K9HDG08U5A					

5.21 Reset

The device offers a reset feature, executed by writing FFh to the command register. When the device is in Busy state during random read, program or erase mode, the reset operation will abort these operations. The contents of memory cells being altered are no longer valid, as the data will be partially programmed or erased. The command register is cleared to wait for the next command, and the Status Register is cleared to value C0h when WP is high. Refer to table for device status after reset operation. If the device is already in reset state a new reset command will be accepted by the command register. The R/B pin changes to low for tRST after the Reset command is written.

RESET Operation

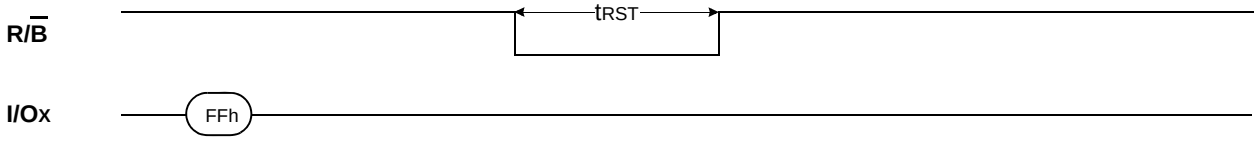

Device Status

	After Power-up	After Reset
Operation mode Mode	00h Command is latched	Waiting for next command

5.22 Output driver setting

The device supports four kinds of output driver setting for matching the system characteristics. The nominal output drive strength is the power-on default value. The host is able to select a different drive strength setting using the SET FEATURES (EFh) command with following 10h address (driver setting feature address). The output impedance range from minimum to maximum covers process, voltage, and temperature variations. Devices are not guaranteed to be at the nominal value. The users can tune the output driver impedance of the data by setting the driver strength register value. (See Configuration Register Table) Table 5 shows which output driver would be tuned and the strength according to setting data. Upon power-up, the register will revert to the default setting. Table 6 & Table 7 shows the output driver strength impedance values of each strength and pull-up and pull down output impedance mismatch.

Driver Strength Register Setting

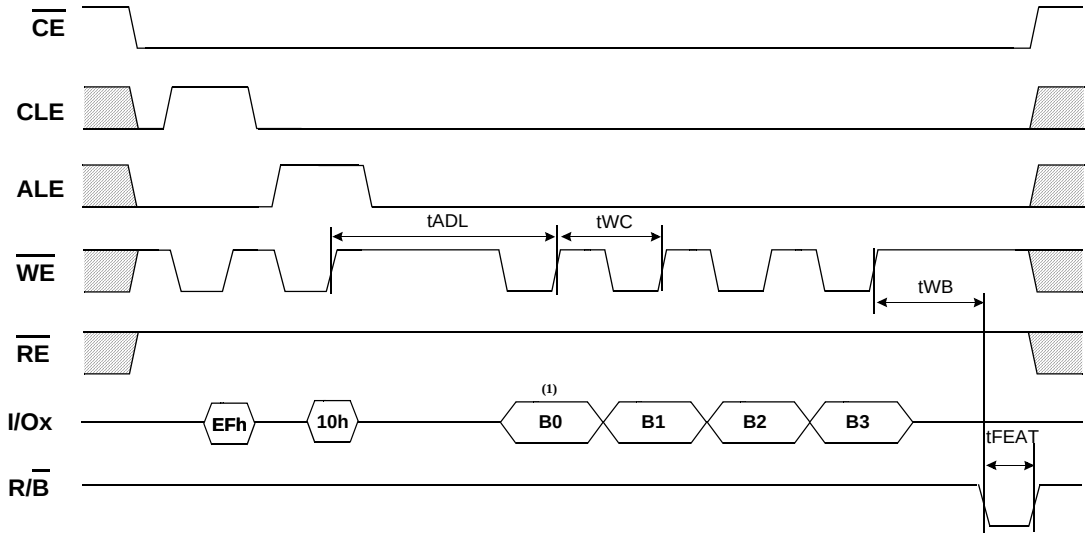

NOTE :
1) B0-B3 are parameters identifying new settings for the feature specified.

Table 5. Output Driver Setting

B0 Value	Driver Strength
00h~01h	Reserved
02h	Driver Multiplier : underdriver1
03h	Reserved
04h	Driver Multiplier : 1 (default)
05h	Reserved
06h	Driver Multiplier :overdriver1
07h	Reserved
09h	Reserved
0Ah ~FFh	Reserved

Driver strength register getting

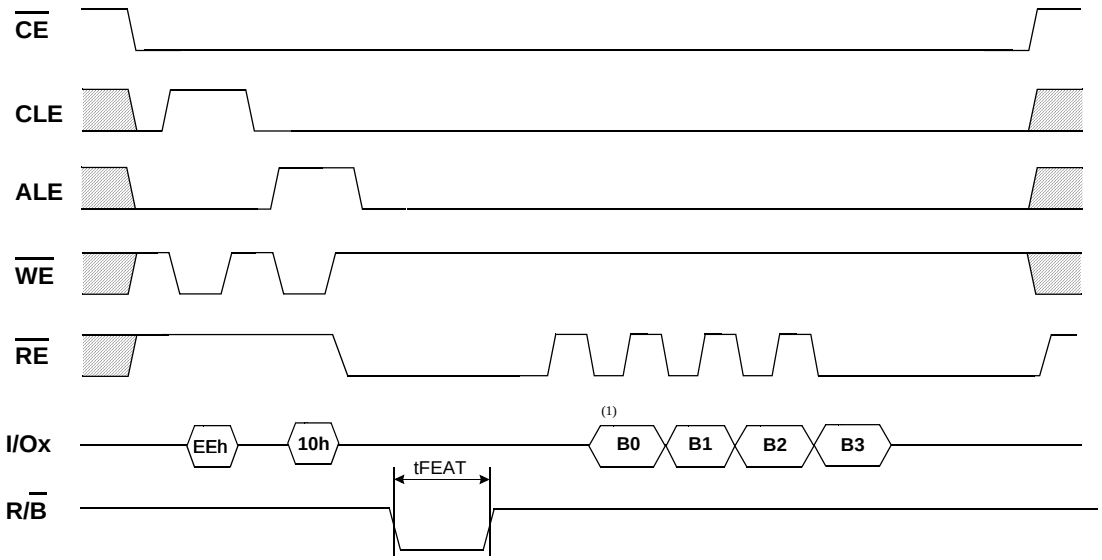

Table 6. Output Drive Strength Impedance Values

Output Strength	Rpd/Rpu	VOUT to VssQ	Minimum	Nominal	Maximum	Units
			VccQ(3.3V)	VccQ(3.3V)	VccQ(3.3V)	
Overdrive1	Rpd	VccQ × 0.2				ohms
		VccQ × 0.5				ohms
		VccQ × 0.8				ohms
	Rpu	VccQ × 0.2				ohms
		VccQ × 0.5				ohms
		VccQ × 0.8				ohms
Nominal	Rpd	VccQ × 0.2				ohms
		VccQ × 0.5				ohms
		VccQ × 0.8				ohms
	Rpu	VccQ × 0.2				ohms
		VccQ × 0.5				ohms
		VccQ × 0.8				ohms
Underdrive	Rpd	VccQ × 0.2				ohms
		VccQ × 0.5				ohms
		VccQ × 0.8				ohms
	Rpu	VccQ × 0.2				ohms
		VccQ × 0.5				ohms
		VccQ × 0.8				ohms

Table 7. Pull-up and Pull-down Output Impedance Mismatch

Drive Strength	Min	Max	Unit	Notes
	VccQ(3.3V)	VccQ(3.3V)		
Overdrive 1	0		ohms	1, 2
Nominal	0		ohms	1, 2
Underdrive	0		ohms	1, 2

NOTE :
1) Mismatch is the absolute value between pull-up and pull-down impedances. Both are measured at the same temperature and voltage.
2) Test conditions: VccQ = VccQ(min), Vout = VccQ × 0.5, $T_A = T_{OPER}$

5.23 Ready/$\overline{busy}$

The device has a R/$\overline{B}$ output that provides a hardware method of indicating the completion of a page program, erase and random read completion. The R/$\overline{B}$ pin is normally high but transitions to low after program or erase command is written to the command register or random read is started after address loading. It returns to high when the internal controller has finished the operation. The pin is an open-drain driver thereby allowing two or more R/$\overline{B}$ outputs to be Or-tied. Because pull-up resistor value is related to tr(R/$\overline{B}$) and current drain during busy(ibusy) , an appropriate value can be obtained with the following reference chart. Its value can be determined by the following guidance.

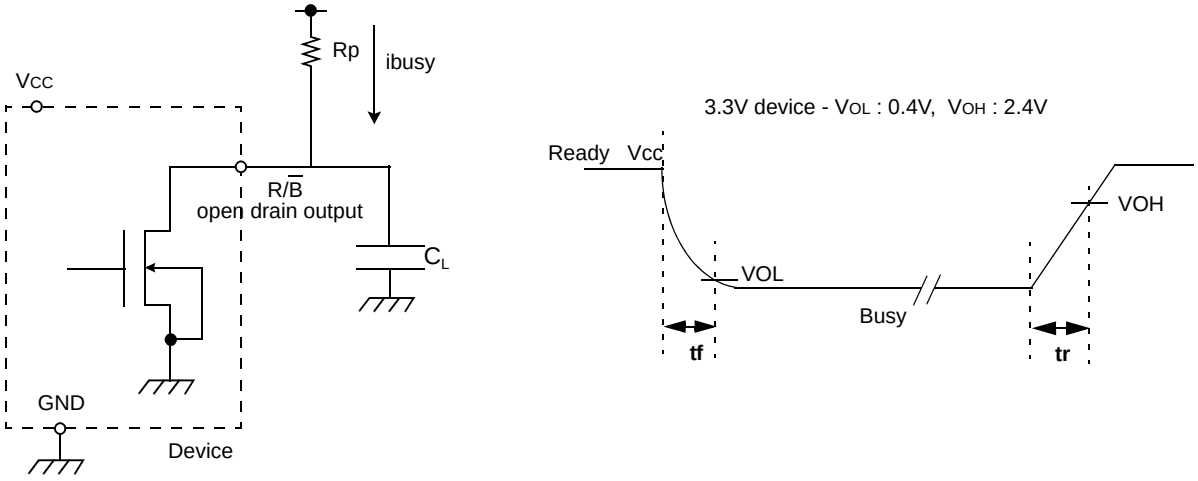

Rp vs tr ,tf & Rp vs ibusy

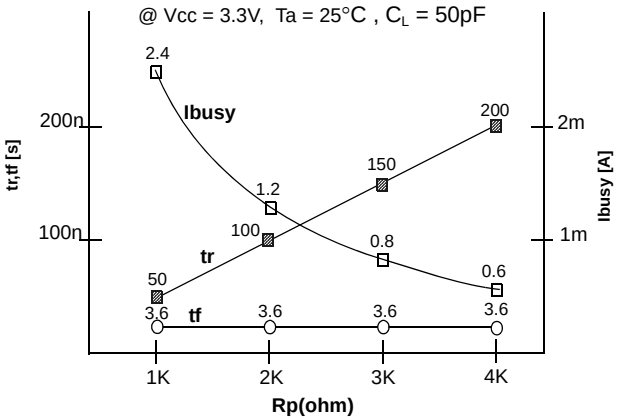

Rp value guidance

$$Rp(min, 3.3V\ part) = \frac{VCC(Max.) - VOL(Max.)}{IOL + \Sigma IL} = \frac{3.2V}{8mA + \Sigma I_L}$$

where I_L is the sum of the input currents of all devices tied to the R/$\overline{B}$ pin.
Rp(max) is determined by maximum permissible limit of tr

5.24 00h Address ID Cycle

Device	1st Cycle	Dvice Code(2nd)	3rd Cycle	4th Cycle	5th Cycle	6th Cycle
K9GBG08U0A	ECh	D7h	94h	76h	64h	43h
K9LCG08U1A						
K9HDG08U5A						

5.25 40h Address ID Cycle

Device	1st Cycle	Dvice Code(2nd)	3rd Cycle	4th Cycle	5th Cycle	6th Cycle
K9GBG08U0A	4Ah	45h	44h	45h	43h	01h
K9LCG08U1A						
K9HDG08U5A						

5.26 Device Identification Table Read Operation

The device supports the device ID table read operation to give more ID information such as the device's organization, features, timings and other parameters. Refer to the Device ID Table Read timing diagram below.

Values in the Device ID Table are static and shall not change.

Device ID Table Read

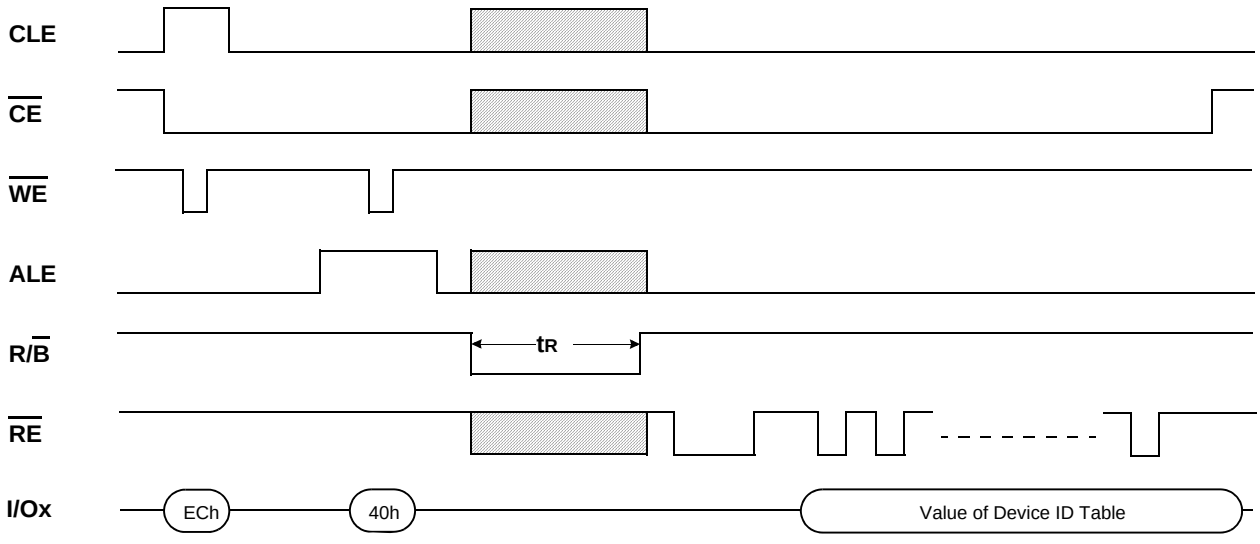

Device ID table definitions

Byte	O/M	Description	Value
	Revision information and features block		
0-3	M	Parameter page signature Byte 0: “J” (= 4Ah) Byte 1: “E” (= 45h) Byte 2: “S” (= 53h) Byte 3: “D” (= 44h)	4Ah, 45h, 53h, 44h
4-5	M	Revision number 2-15: Reserved (0) 1: 1 = supports revision 1.0 0: Reserved (0)	02h, 00h
6-7	M	Features supported 0-15 Reserved (0) <To be defined based on feature discussions.>	TBD
8-10	M	Optional commands supported 0-23: Reserved (0) <To be defined based on command set discussions.>	TBD
11-3111-31		Reserved (0)	All 00h
	Manufacturer information block		
32-43	M	Device manufacturer (12 ASCII characters)	53h, 41h, 4Dh, 53h 55h, 4Eh, 47h, 20h 20h, 20h, 20h, 20h
44-63	M	Device model (20 ASCII characters)	4Bh, 39h, 36h, 41h, 47h 44h, 38h, 55h, 30h, 4Dh 20h, 20h, 20h, 20h, 20h 20h, 20h, 20h, 20h, 20h
64-69	M	JEDEC manufacturer ID (6 bytes)	ECh, 00h, 00h,00h,00h,00h
70-71	TBD	TBD	TBD
72-79		Reserved (0)	
	Memory organization block		
80-83	M	Number of data bytes per page	00h, 20h, 00h, 00h
84-85	M	Number of spare bytes per page	00h, 02h
86-89	M	TBD	TBD
90-91	M	TBD	TBD
92-95	M	Number of pages per block	40h, 00h, 00h, 00h
96-99	M	Number of blocks per logical unit	38h, 10h, 00h, 00h
100	M	Number of logical unit	01h
101-255	TBD	TBD	TBD
	Redundant parameter pages		
255-511	M	Redundant parameter pages	Value of byte 0-255
512-767	M	Redundant parameter pages	Value of byte 0-255
From768	O	Additional redundant parameter pages.	TBD

NOTE :
Values in the Device ID Table are TBD

6.0 DATA PROTECTION & POWER UP SEQUENCE

The device is designed to offer protection from any involuntary program/erase during power-transitions. An internal voltage detector disables all functions whenever Vcc is below about 2V. The Reset command(FFh) must be issued to all $\overline{CE}$s as the first command after the NAND Flash device is powered on. Each $\overline{CE}$ will be busy for a maximum of 5ms after a RESET command is issued. In this time period, the acceptable command is 70h/F1h.
$\overline{WP}$ pin provides hardware protection and is recommended to be kept at V_{IL} during power-up and power-down. The two step command sequence for program/erase provides additional software protection.

AC Waveforms for Power Transition

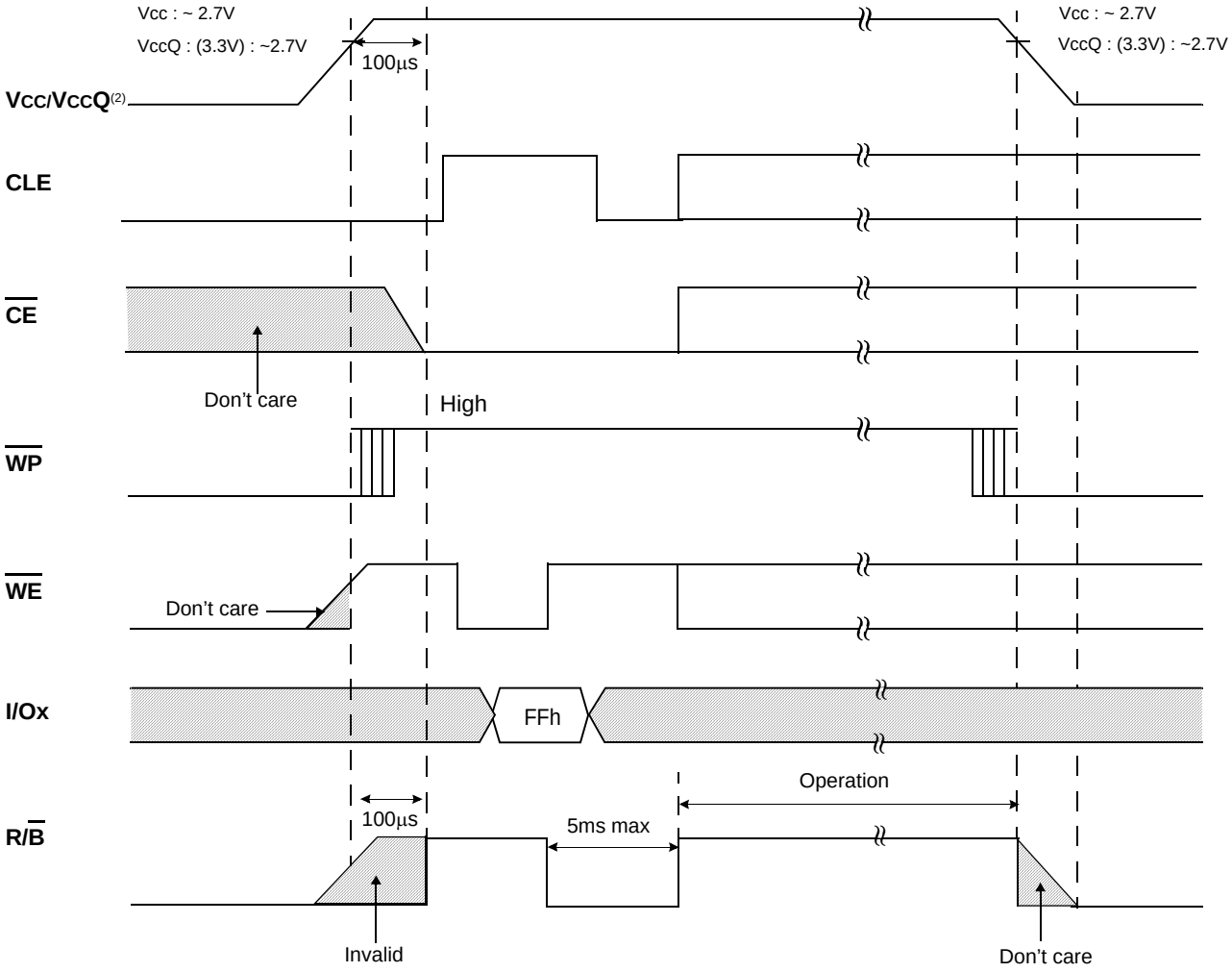

NOTE :
1) During the initialization, the device consumes a maximum current of 50mA (ICC1)
2) Vcc should be reached the valid voltage no later than VccQ.

6.1 $\overline{WP}$ AC Timing guide

Enabling $\overline{WP}$ during erase and program busy is prohibited. The erase and program operations are enabled and disabled as follows:

Program Operation

1. Enable Mode

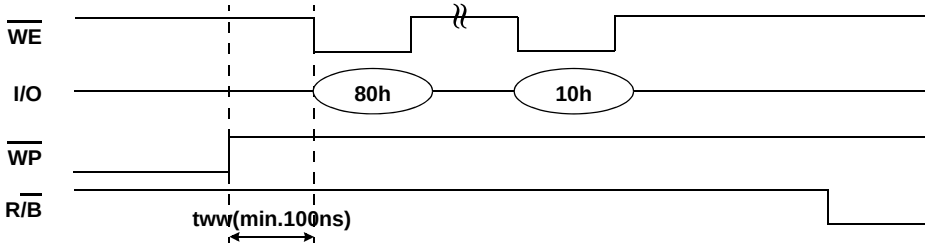

2. Disable Mode

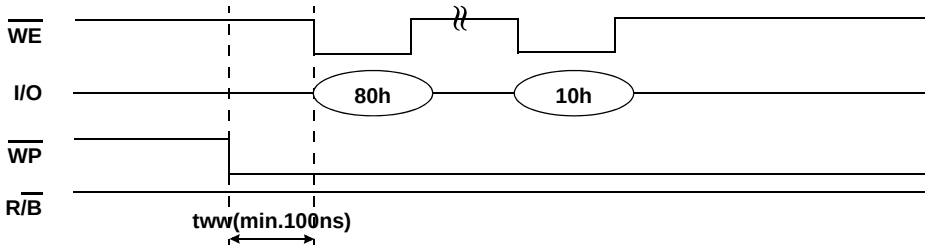

Erase Operation

1. Enable Mode

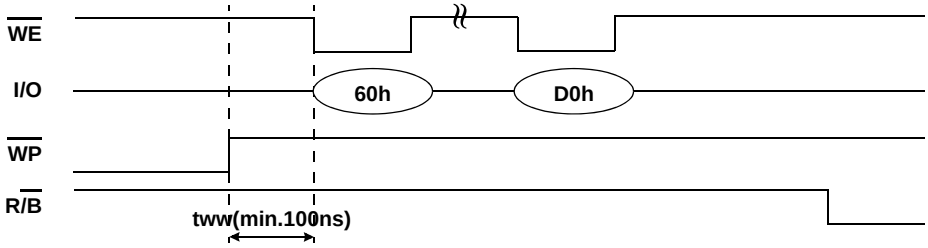

2. Disable Mode

