

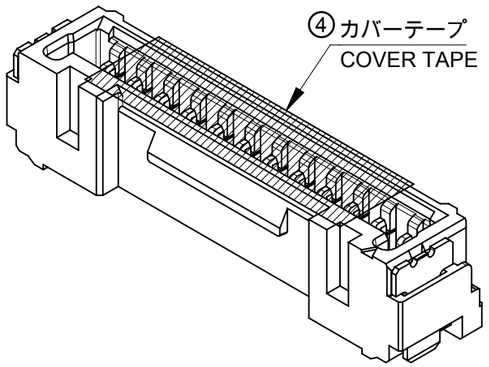

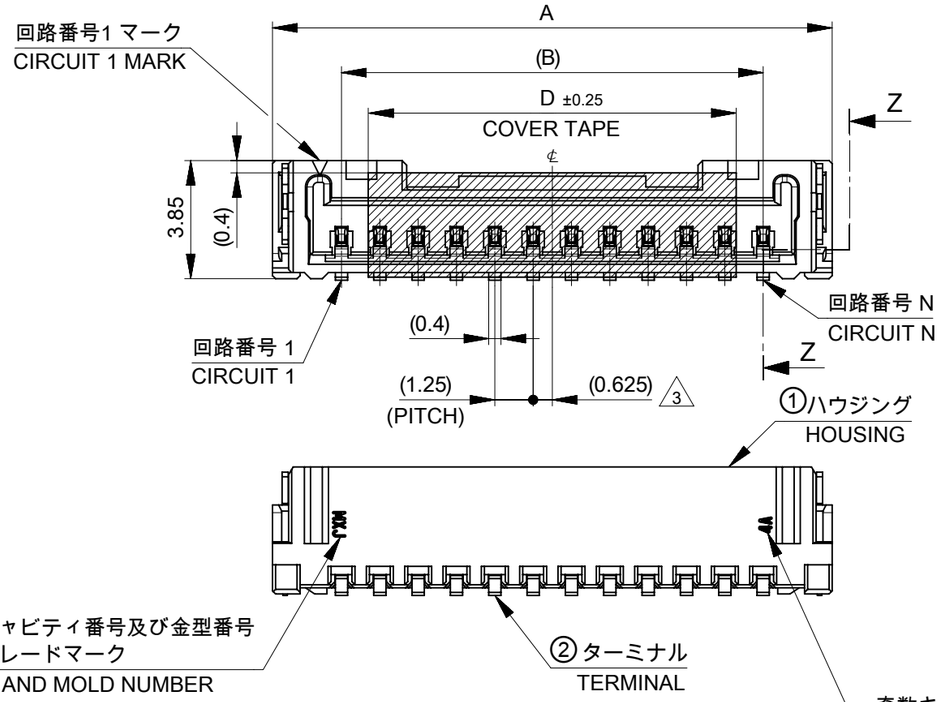

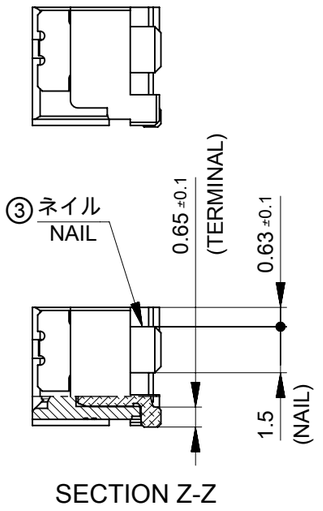

注記 NOTES:

1. 材料及び仕上げ（めっき仕様）：TABLE 1, TABLE 2 参照
   MATERIAL AND FINISHES(PLATING SPECIFICATION)
   : SEE TABLE 1, TABLE 2.
2. 嵌合相手：505565シリーズ
   MATE WITH: 505565 SERIES
3. 偶数極 に適用
   APPLY TO EVEN CIRCUIT.
4. 製品仕様書：5055650002 PS 000
   PRODUCT SPECIFICATION:5055650002 PS 000
5. 発注番号：SHEET 5 参照
   ORDER NUMBER : PLEASE REFER TO SHEET 5

505568 ** * *

極数 CIRCUIT SIZE

番号 NO.	ハウジングカラー HOUSING COLOR
0	ナチュラル(ベージュ) NATURAL(BEIGE)
1	黒 BLACK
2	赤 RED
4	青 BLUE

番号 NO.	接点部 金めっき厚 CONTACT GOLD PLATING THICKNESS [MICROMETER MINIMUM]
8	0.1
3	0.38
5	0.76

6. ターミナルとネイルの平坦度は0.1mm以下
   TERMINAL AND NAIL COPLANARITY : 0.1mm MAXIMUM.
7. コネクタ取扱説明書：5055650000-AS PS 000
   APPLICATION SPECIFICATION: 5055650000-AS PS 000

H	G	F	E	D	C	B	A	極数 CIRCUIT SIZE
49.4	45.4	20.2	44±0.3	12	22.2	18.75	23.25	16
					20.95	17.5	22	15
					19.7	16.25	20.75	14
37.4	33.4	14.2	32±0.3		18.45	15	19.5	13
					17.2	13.75	18.25	12
					15.95	12.5	17	11
					14.7	11.25	15.75	10
29.4	25.4	11.5	24 +0.3 -0.1	10	13.45	10	14.5	9
				8	12.2	8.75	13.25	8
					10.95	7.5	12	7
					9.7	6.25	10.75	6
					8.45	5	9.5	5
				7	7.2	3.75	8.25	4
21.4	17.4	7.5	16 +0.3 -0.1	5	5.95	2.5	7	3
					4.7	1.25	5.75	2

1 TABLE 1

番号 NO.	部品 PART	材質 MATERIAL
①	ハウジング HOUSING	ポリアミド(PA),ガラス充填,UL94 V-0,色：SHEET 5参照 POLYAMIDE (PA),GLASS FILLED,UL94 V-0,COLOR:SEE SHEET 5
②	ターミナル TERMINAL	黄銅 BRASS
		接点部：金めっき めっき厚は注記5参照 CONTACT : GOLD PLATING PLATING THICKNESS : SEE NOTE 5.
		ニッケルめっき(下地めっき)：1.0 MICROMETER MINIMUM NICKEL PLATING (UNDER PLATING)
③	ネイル NAIL	黄銅 BRASS
		錫めっき：1.0 MICROMETER MINIMUM MATTE TIN PLATING
		ニッケルめっき(下地めっき)：1.0 MICROMETER MINIMUM NICKEL PLATING (UNDER PLATING)
④	カバーテープ COVER TAPE	ポリイミド POLYIMIDE

DOCUMENT STATUS	P1	RELEASE DATE	2026/02/10 10:00:26

THIS DRAWING CONTAINS INFORMATION THAT IS PROPRIETARY TO MOLEX ELECTRONIC TECHNOLOGIES, LLC AND SHOULD NOT BE USED WITHOUT WRITTEN PERMISSION

DIMENSION UNITS	SCALE
mm	NTS

GENERAL TOLERANCES (UNLESS SPECIFIED)

ANGULAR TOL	±	3.0 °
4 PLACES	±	0.2
3 PLACES	±	0.2
2 PLACES	±	0.2
1 PLACE	±	0.2
0 PLACES	±	0.2

DRAFT WHERE APPLICABLE MUST REMAIN WITHIN DIMENSIONS

CURRENT REV DESC: REMOVED OBSOLETED PART NUMBERS AS PER PCN#516659

EC NO: 844075
DRWN: SAMPRS 2025/12/31
CHK'D: GGA 2026/02/10
APPR: GGA 2026/02/10

INITIAL REVISION:
DRWN: RWATANABE01 2017/11/28
APPR: TKANEKO 2017/12/06

THIRD ANGLE PROJECTION | DRAWING: A3-SIZE | SERIES: 505568

molex

MICRO-LOCK PLUS 1.25 W/B
SINGLE ROW VERTICAL SMT PLUG ASSEMBLY
GOLD PLATING

PRODUCT CUSTOMER DRAWING

DOCUMENT NUMBER	DOC TYPE	DOC PART	REVISION
5055680010-SD	PSD	000	D2

MATERIAL NUMBER	CUSTOMER	SHEET NUMBER
SEE TABLE	GENERAL	1 OF 5

FORMAT: master-tb-prod-A3
REVISION: J1
DATE: 2021/05/01

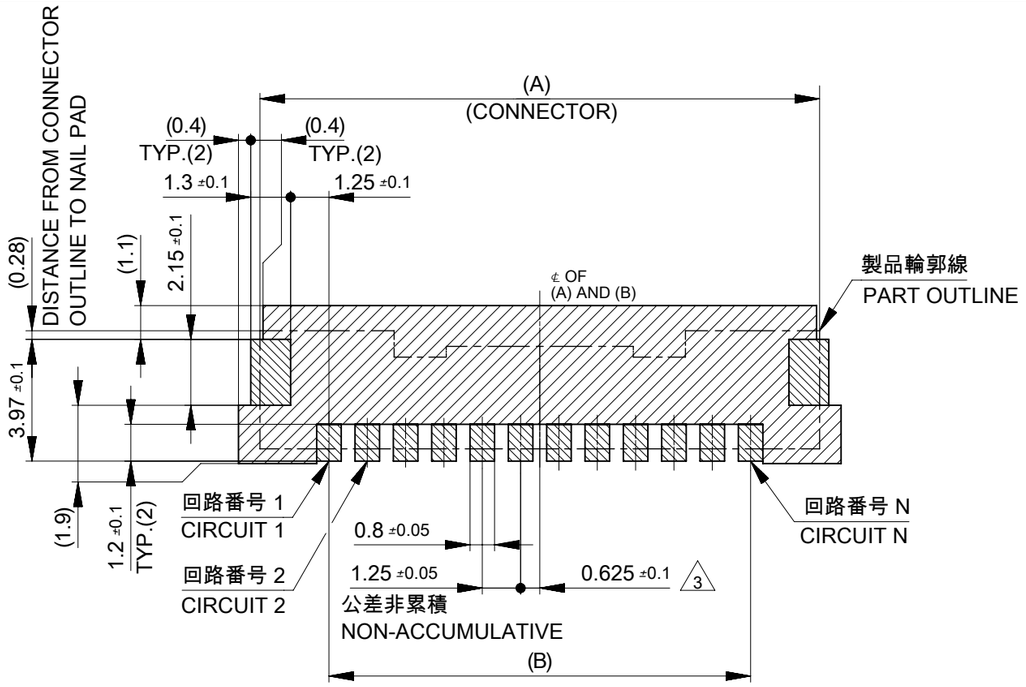

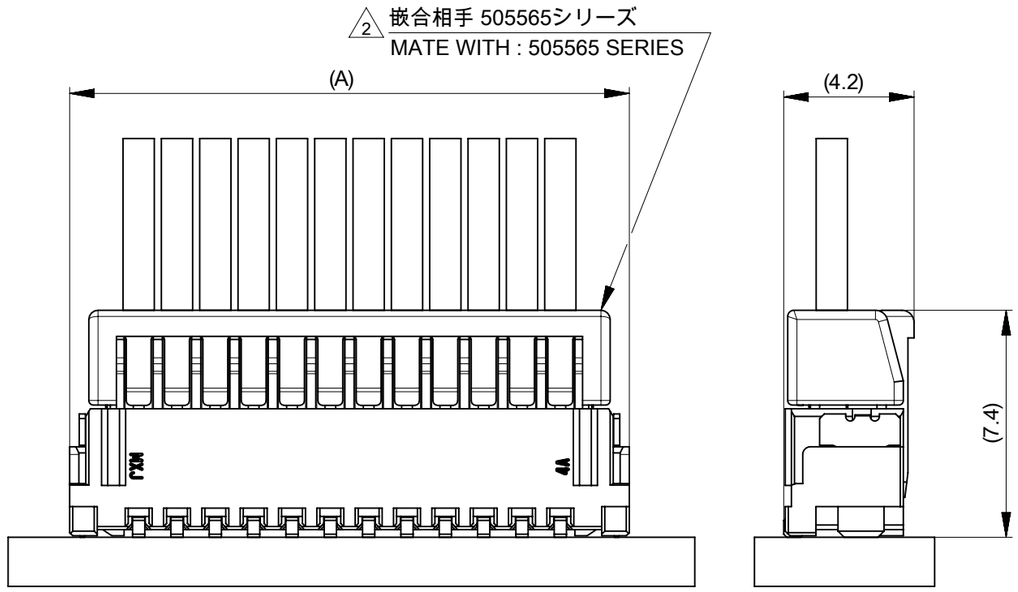

嵌合状態図
MATED CONNECTORS

推奨基板レイアウト
RECOMMENDED PCB PATTERN LAYOUT

(参考：基板厚1.6mm, メタルマスク厚さ 0.15mm, マスク開口率 100%)
(REFERENCE: PCB THICKNESS 1.6mm, STENCIL THICKNESS 0.15mm, APERTURE RATIO 100%)

パターン非推奨エリア
パターンを引き回す際は、製品機能に影響がないことをご確認ください。
PATTERN IS NOT RECOMMENDED ON THE HATCHING AREA
PLEASE CHECK NOT TO HAVE PROBLEM FOR PRODUCT FUNCTION
WHEN SETTING PATTERN ON THE HATCHING AREA.

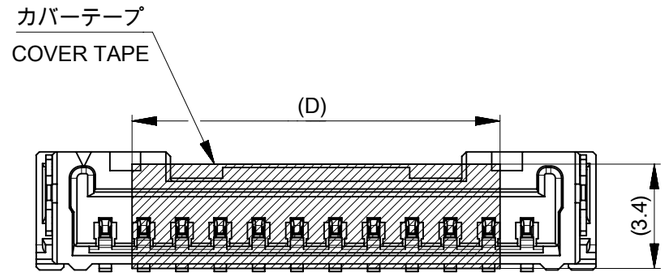

吸着範囲
SUCTION AREA

THIS DRAWING CONTAINS INFORMATION THAT IS PROPRIETARY TO MOLEX ELECTRONIC TECHNOLOGIES, LLC AND SHOULD NOT BE USED WITHOUT WRITTEN PERMISSION

DIMENSION UNITS	SCALE
mm	NTS

GENERAL TOLERANCES (UNLESS SPECIFIED)

ANGULAR TOL	±	3.0 °
4 PLACES	±	0.2
3 PLACES	±	0.2
2 PLACES	±	0.2
1 PLACE	±	0.2
0 PLACES	±	0.2

DRAFT WHERE APPLICABLE MUST REMAIN WITHIN DIMENSIONS

CURRENT REV DESC: REMOVED OBSOLETED PART NUMBERS AS PER PCN#516659

EC NO: 844075
DRWN: SAMPRS 2025/12/31
CHK'D: GGA 2026/02/10
APPR: GGA 2026/02/10

INITIAL REVISION:
DRWN: RWATANABE01 2017/11/28
APPR: TKANEKO 2017/12/06

THIRD ANGLE PROJECTION | DRAWING: A3-SIZE | SERIES: 505568

molex

MICRO-LOCK PLUS 1.25 W/B
SINGLE ROW VERTICAL SMT PLUG ASSEMBLY
GOLD PLATING

PRODUCT CUSTOMER DRAWING

DOCUMENT NUMBER	DOC TYPE	DOC PART	REVISION
5055680010-SD	PSD	000	D2

MATERIAL NUMBER	CUSTOMER	SHEET NUMBER
SEE TABLE	GENERAL	2 OF 5

DOCUMENT STATUS	P1	RELEASE DATE	2026/02/10 10:00:26

FORMAT: master-tb-prod-A3
REVISION: J1
DATE: 2021/05/01

製品形状
PRODUCT SHAPE

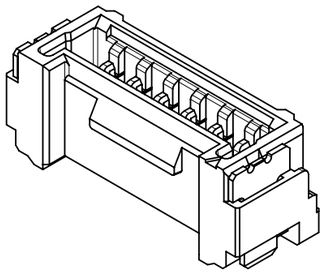

2-11極
2-11 CIRCUIT

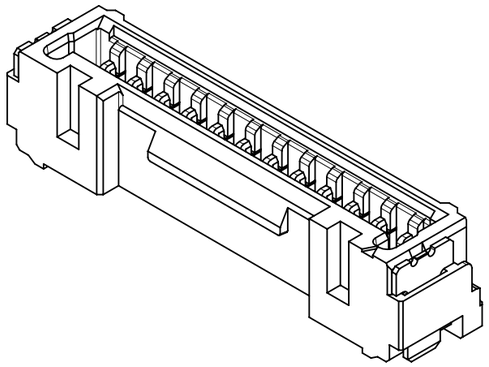

12-13極
12-13 CIRCUIT

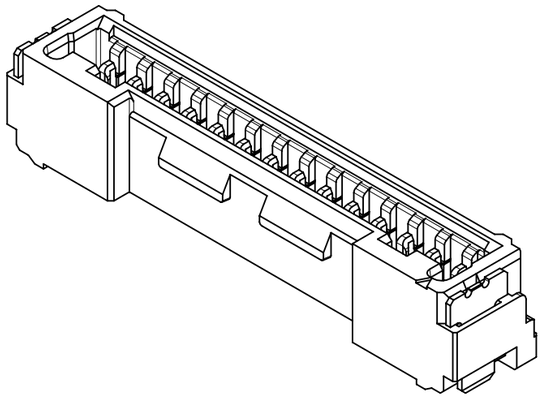

14極
14 CIRCUIT

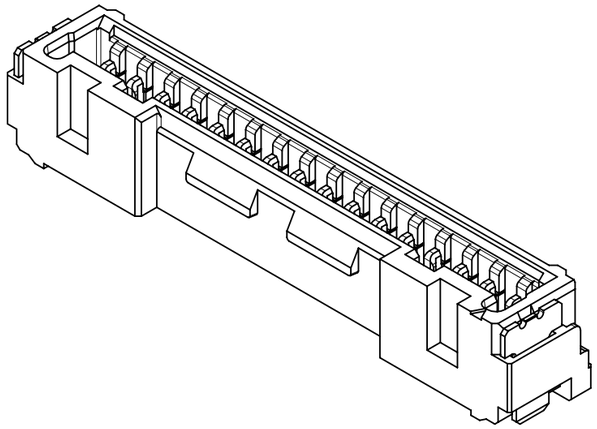

15-16極
15-16 CIRCUIT

THIS DRAWING CONTAINS INFORMATION THAT IS PROPRIETARY TO MOLEX ELECTRONIC TECHNOLOGIES, LLC AND SHOULD NOT BE USED WITHOUT WRITTEN PERMISSION

DIMENSION UNITS	SCALE
mm	NTS

GENERAL TOLERANCES (UNLESS SPECIFIED)		
ANGULAR TOL	±	3.0 °
4 PLACES	±	0.2
3 PLACES	±	0.2
2 PLACES	±	0.2
1 PLACE	±	0.2
0 PLACES	±	0.2

DRAFT WHERE APPLICABLE MUST REMAIN WITHIN DIMENSIONS

CURRENT REV DESC: REMOVED OBSOLETED PART NUMBERS AS PER PCN#516659

EC NO: 844075
DRWN: SAMPRS 2025/12/31
CHK'D: GGA 2026/02/10
APPR: GGA 2026/02/10

INITIAL REVISION:
DRWN: RWATANABE01 2017/11/28
APPR: TKANEKO 2017/12/06

molex

MICRO-LOCK PLUS 1.25 W/B
SINGLE ROW VERTICAL SMT PLUG ASSEMBLY
GOLD PLATING

PRODUCT CUSTOMER DRAWING

DOCUMENT NUMBER	DOC TYPE	DOC PART	REVISION
5055680010-SD	PSD	000	D2

THIRD ANGLE PROJECTION	DRAWING	SERIES	MATERIAL NUMBER	CUSTOMER	SHEET NUMBER
	A3-SIZE	505568	SEE TABLE	GENERAL	3 OF 5

DOCUMENT STATUS	P1	RELEASE DATE	2026/02/10 10:00:26

FORMAT: master-lb-prod-A3
REVISION: J1
DATE: 2021/05/01

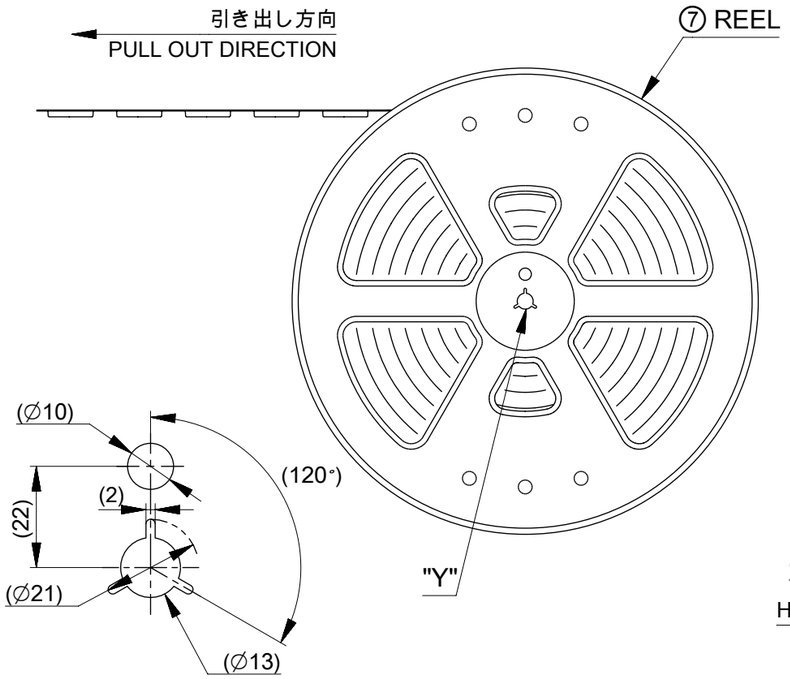

DETAIL "Y"

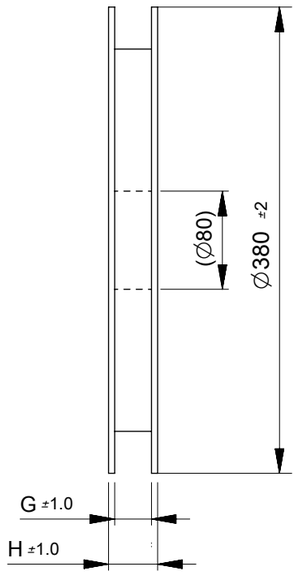

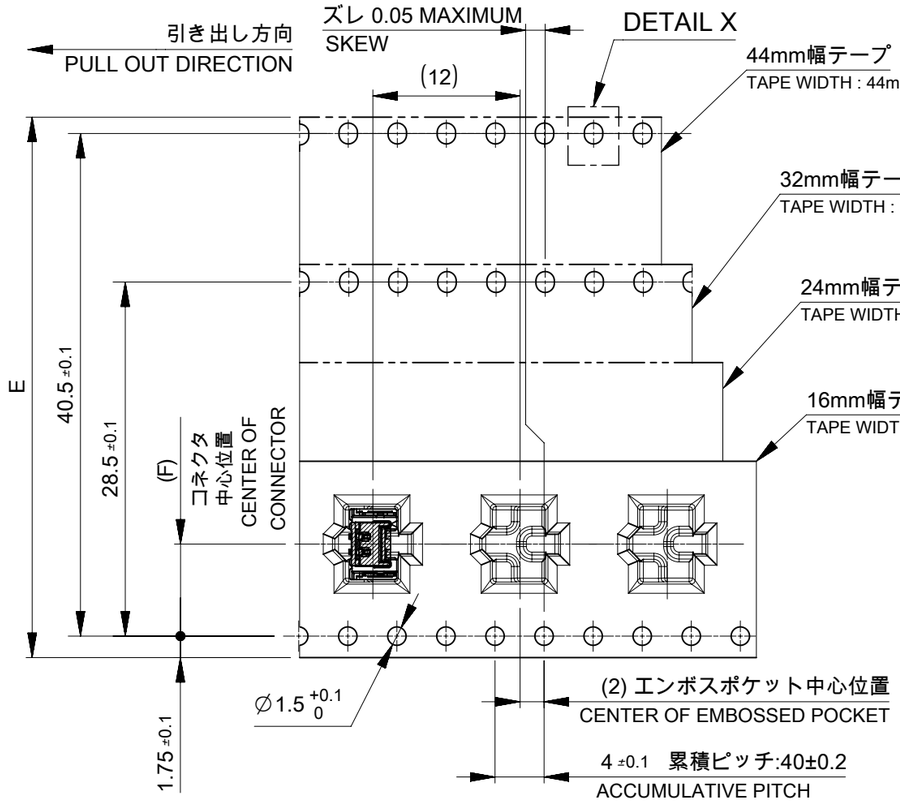

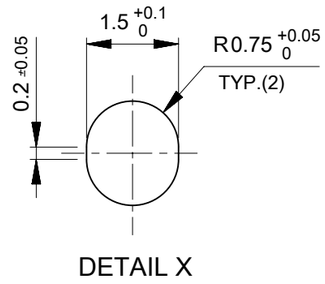

DETAIL X

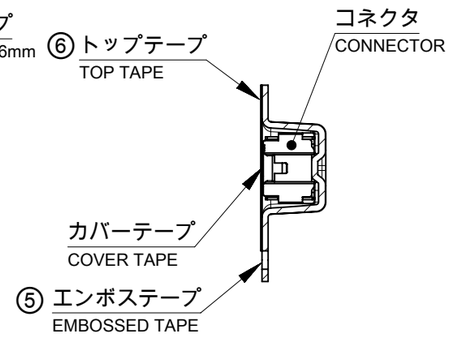

注記 NOTES

8. 梱包数量： 1200個 / リール
   NUMBER OF CONNECTORS : 1200 PCS/REEL.
9. リードテープ長さ
   LEAD TAPE LENGTH.

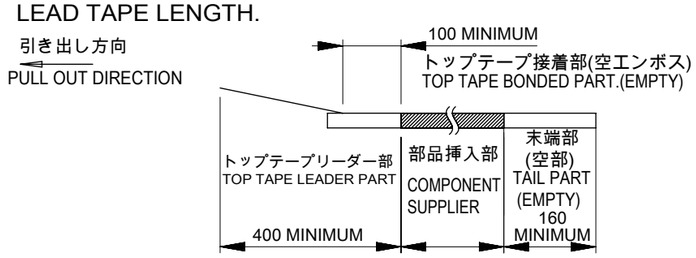

10. トップテープの剥離強度はIEC60286-3に準拠
    TOP TAPE PEELING FORCE IS DEFINED BY IEC60286-3
11. 梱包仕様書：5055689200 PS 200
    PACKING SPECIFICATION : 5055689200 PS 200

⚠1 TABLE 2

番号 NO.	部品 PART	材質 MATERIAL
⑤	エンボステープ EMBOSSED TAPE	ポリスチレン(PS) POLYSTYRENE(PS)
⑥	トップテープ TOP TAPE	ポリエチレン(PE), その他 POLYETHYLENE(PE), ETC
⑦	リール REEL	ポリスチレン(PS) < リサイクル材を含む > POLYSTYRENE(PS) < RECYCLE MATERIAL CONTAINED >

DOCUMENT STATUS	P1	RELEASE DATE	2026/02/10 10:00:26

THIS DRAWING CONTAINS INFORMATION THAT IS PROPRIETARY TO MOLEX ELECTRONIC TECHNOLOGIES, LLC AND SHOULD NOT BE USED WITHOUT WRITTEN PERMISSION

DIMENSION UNITS	SCALE
mm	NTS

GENERAL TOLERANCES (UNLESS SPECIFIED)

ANGULAR TOL	±	3.0 °
4 PLACES	±	0.2
3 PLACES	±	0.2
2 PLACES	±	0.2
1 PLACE	±	0.2
0 PLACES	±	0.2

DRAFT WHERE APPLICABLE MUST REMAIN WITHIN DIMENSIONS

CURRENT REV DESC: REMOVED OBSOLETED PART NUMBERS AS PER PCN#516659

EC NO: 844075
DRWN: SAMPRS 2025/12/31
CHK'D: GGA 2026/02/10
APPR: GGA 2026/02/10

INITIAL REVISION:
DRWN: RWATANABE01 2017/11/28
APPR: TKANEKO 2017/12/06

molex

MICRO-LOCK PLUS 1.25 W/B
SINGLE ROW VERTICAL SMT PLUG ASSEMBLY
GOLD PLATING

PRODUCT CUSTOMER DRAWING

THIRD ANGLE PROJECTION	DRAWING	SERIES	MATERIAL NUMBER	CUSTOMER	SHEET NUMBER
	A3-SIZE	505568	SEE TABLE	GENERAL	4 OF 5

DOCUMENT NUMBER	DOC TYPE	DOC PART	REVISION
5055680010-SD	PSD	000	D2

FORMAT: master-ib-prod-A3
REVISION: J1
DATE: 2021/05/01

△5 505568**8* 発注番号一覧 ORDER NUMBER LIST

BLUE	RED	BLACK	NATURAL (BEIGE)	HOUSING COLOR
5055681684	5055681682	5055681681	5055681680	16
5055681584	5055681582	5055681581	5055681580	15
5055681484	5055681482	5055681481	5055681480	14
5055681384	5055681382	5055681381	5055681380	13
5055681284	5055681282	5055681281	5055681280	12
5055681184	5055681182	5055681181	5055681180	11
5055681084	5055681082	5055681081	5055681080	10
5055680984	5055680982	5055680981	5055680980	9
5055680884	5055680882	5055680881	5055680880	8
5055680784	5055680782	5055680781	5055680780	7
5055680684	5055680682	5055680681	5055680680	6
5055680584	5055680582	5055680581	5055680580	5
5055680484	5055680482	5055680481	5055680480	4
5055680384	5055680382	5055680381	5055680380	3
5055680284	5055680282	5055680281	5055680280	2
発注番号：ORDER NUMBER				極数 CIRCUIT SIZE
梱包形態：エンボステープ梱包 PACKAGING：EMBOSSED TAPE AND REEL				

△5 505568**5* 発注番号一覧 ORDER NUMBER LIST

BLUE	RED	BLACK	NATURAL (BEIGE)	HOUSING COLOR
5055681654	5055681652	5055681651	5055681650	16
5055681554	5055681552	5055681551	5055681550	15
5055681454	5055681452	5055681451	5055681450	14
5055681354	5055681352	5055681351	5055681350	13
5055681254	5055681252	5055681251	5055681250	12
5055681154	5055681152	5055681151	5055681150	11
5055681054	5055681052	5055681051	5055681050	10
5055680954	5055680952	5055680951	5055680950	9
5055680854	5055680852	5055680851	5055680850	8
5055680754	5055680752	5055680751	5055680750	7
5055680654	5055680652	5055680651	5055680650	6
5055680554	5055680552	5055680551	5055680550	5
5055680454	5055680452	5055680451	5055680450	4
5055680354	5055680352	5055680351	5055680350	3
5055680254	5055680252	5055680251	5055680250	2
発注番号：ORDER NUMBER				極数 CIRCUIT SIZE
梱包形態：エンボステープ梱包 PACKAGING：EMBOSSED TAPE AND REEL				

△5 505568**3* 発注番号一覧 ORDER NUMBER LIST

BLUE	RED	BLACK	NATURAL (BEIGE)	HOUSING COLOR
5055681634	5055681632	5055681631	5055681630	16
5055681534	5055681532	5055681531	5055681530	15
5055681434	5055681432	5055681431	5055681430	14
5055681334	5055681332	5055681331	5055681330	13
5055681234	5055681232	5055681231	5055681230	12
5055681134	5055681132	5055681131	5055681130	11
5055681034	5055681032	5055681031	5055681030	10
5055680934	5055680932	5055680931	5055680930	9
5055680834	5055680832	5055680831	5055680830	8
5055680734	5055680732	5055680731	5055680730	7
5055680634	5055680632	5055680631	5055680630	6
5055680534	5055680532	5055680531	5055680530	5
5055680434	5055680432	5055680431	5055680430	4
5055680334	5055680332	5055680331	5055680330	3
5055680284	5055680232	5055680231	5055680230	2
発注番号：ORDER NUMBER				極数 CIRCUIT SIZE
梱包形態：エンボステープ梱包 PACKAGING：EMBOSSED TAPE AND REEL				

THIS DRAWING CONTAINS INFORMATION THAT IS PROPRIETARY TO MOLEX ELECTRONIC TECHNOLOGIES, LLC AND SHOULD NOT BE USED WITHOUT WRITTEN PERMISSION

DIMENSION UNITS	SCALE
mm	NTS

GENERAL TOLERANCES (UNLESS SPECIFIED)

ANGULAR TOL	±	3.0 °
4 PLACES	±	0.2
3 PLACES	±	0.2
2 PLACES	±	0.2
1 PLACE	±	0.2
0 PLACES	±	0.2

DRAFT WHERE APPLICABLE MUST REMAIN WITHIN DIMENSIONS

CURRENT REV DESC: REMOVED OBSOLETED PART NUMBERS AS PER PCN#516659

EC NO: 844075
DRWN: SAMPRS 2025/12/31
CHK'D: GGA 2026/02/10
APPR: GGA 2026/02/10

INITIAL REVISION:
DRWN: RWATANABE01 2017/11/28
APPR: TKANEKO 2017/12/06

THIRD ANGLE PROJECTION | DRAWING: A3-SIZE | SERIES: 505568

molex

MICRO-LOCK PLUS 1.25 W/B
SINGLE ROW VERTICAL SMT PLUG ASSEMBLY
GOLD PLATING

PRODUCT CUSTOMER DRAWING

DOCUMENT NUMBER	DOC TYPE	DOC PART	REVISION
5055680010-SD	PSD	000	D2

MATERIAL NUMBER	CUSTOMER	SHEET NUMBER
SEE TABLE	GENERAL	5 OF 5

DOCUMENT STATUS	P1	RELEASE DATE	2026/02/10 10:00:26

FORMAT: master-lb-prod-A3
REVISION: J1
DATE: 2021/05/01