TPS61023 3.7-A Boost Converter with 0.5-V Ultra-low Input Voltage

1 Features

- Input voltage range: 0.5 V to 5.5 V
- 1.8-V Minimum input voltage for start-up
- Output voltage setting range: 2.2 V to 5.5 V
- Two 47-mΩ (LS) / 68-mΩ (HS) MOSFETs
- 3.7-A Valley switching current limit
- 94% Efficiency at V_{IN} = 3.6 V, V_{OUT} = 5 V and I_{OUT} = 1.5 A
- 1-MHz Switching frequency when V_{IN} > 1.5 V and 0.5-MHz switching frequency when V_{IN} < 1 V
- Typical 0.1-μA shutdown current from V_{IN} and SW
- ±2.5% Reference voltage accuracy over –40°C to +125°C
- Auto PFM operation mode at light load
- Pass-through mode when V_{IN} > V_{OUT}
- True disconnection between input and output during shutdown
- Output overvoltage and thermal shutdown protections
- Output short-circuit protection
- 1.2-mm × 1.6-mm SOT563 (DRL) 6-pin package

2 Applications

- Electronic shelf label
- Video doorbell
- Remote controller

3 Description

TPS61023 device is a synchronous boost converter with 0.5-V ultra-low input voltage. The device provides a power supply solution for portable equipment and smart devices powered by various batteries and super capacitors. The TPS61023 has typical 3.7-A valley switch current limit over full temperature range. With a wide input voltage range of 0.5 V to 5.5 V, the TPS61023 supports super capacitor backup power applications, which may deeply discharge the super capacitor.

The TPS61023 operates at 1-MHz switching frequency when the input voltage is above 1.5 V. The switching frequency decreases gradually to 0.5 MHz when the input voltage is below 1.5 V down to 1 V. The TPS61023 enters power-save mode at light load condition to maintain high efficiency over the entire load current range. The TPS61023 consumes a 20-μA quiescent current from V_{OUT} in light load condition. During shutdown, the TPS61023 is completely disconnected from the input power and only consumes a 0.1-μA current to achieve long battery life. The TPS61023 has 5.7-V output overvoltage protection, output short circuit protection, and thermal shutdown protection.

The TPS61023 offers a very small solution size with 1.2-mm × 1.6-mm SOT563 (DRL) package and minimum amount of external components.

Device Information

PART NUMBER	PACKAGE(1)	BODY SIZE (NOM)
TPS61023	SOT563 (6)	1.20 mm × 1.60 mm

(1) For all available packages, see the orderable addendum at the end of the data sheet.

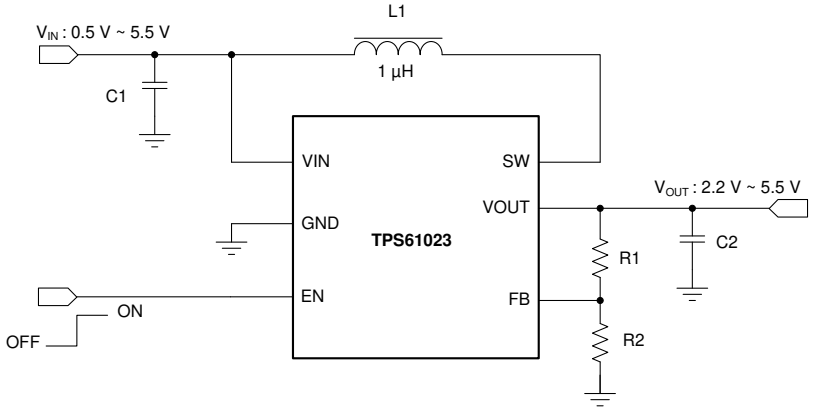

Typical Application Circuit

An IMPORTANT NOTICE at the end of this data sheet addresses availability, warranty, changes, use in safety-critical applications, intellectual property matters and other important disclaimers. PRODUCTION DATA.

Table of Contents

1 Features....1
2 Applications....1
3 Description....1
4 Revision History....2
5 Pin Configuration and Functions....3
Pin Functions....3
6 Specifications....4
6.1 Absolute Maximum Ratings....4
6.2 ESD Ratings....4
6.3 Recommended Operating Conditions....4
6.4 Thermal Information....4
6.5 Electrical Characteristics....5
6.6 Typical Characteristics....6
7 Detailed Description....8
7.1 Overview....8
7.2 Functional Block Diagram....8
7.3 Feature Description....9
7.4 Device Functional Modes....10
8 Application and Implementation....12
8.1 Application Information....12
8.2 Typical Application....12
9 Power Supply Recommendations....17
10 Layout....18
10.1 Layout Guidelines....18
10.2 Layout Example....18
10.3 Thermal Considerations....19
11 Device and Documentation Support....20
11.1 Device Support....20
11.2 Receiving Notification of Documentation Updates....20
11.3 Support Resources....20
11.4 Trademarks....20
11.5 Electrostatic Discharge Caution....20
11.6 Glossary....20
12 Mechanical, Packaging, and Orderable Information....20
12.1 Package Option Addendum....21
12.2 Tape and Reel Information....23

4 Revision History

NOTE: Page numbers for previous revisions may differ from page numbers in the current version.

Changes from Revision A (October 2019) to Revision B (August 2020)	Page
• Updated the numbering format for tables, figures and cross-references throughout the document	1
• Changed unit in Figure 6-6 to µA	6
• Changed 80 mA to 800 mA in Figure 8-7	16

Changes from Revision * (September 2019) to Revision A (October 2019)	Page
• Changed Product Status to Production Data for Production release	1

Copyright © 2020 Texas Instruments Incorporated

5 Pin Configuration and Functions

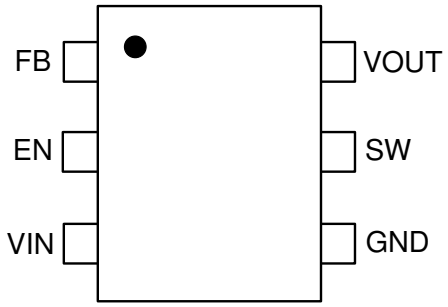

Figure 5-1. DRL Package 6-Pin SOT563 Top View

Pin Functions

PIN		I/O	DESCRIPTION
NO.	NAME		
1	FB	I	Voltage feedback of adjustable output voltage
2	EN	I	Enable logic input. Logic high voltage enables the device. Logic low voltage disables the device and turns it into shutdown mode.
3	VIN	I	IC power supply input
4	GND	PWR	Ground pin of the IC
5	SW	PWR	The switch pin of the converter. It is connected to the drain of the internal low-side power MOSFET and the source of the internal high-side power MOSFET.
6	VOUT	PWR	Boost converter output

Copyright © 2020 Texas Instruments Incorporated

6 Specifications

6.1 Absolute Maximum Ratings

over operating free-air temperature range (unless otherwise noted)(1)

		MIN	MAX	UNIT
Voltage range at terminals(2)	VIN, EN, FB, SW, VOUT	–0.3	7	V
	SW spike at 10ns	–0.7	8	V
	SW spike at 1ns	–0.7	9	V
Operating junction temperature, T_J		–40	150	°C
Storage temperature, T_{stg}		–65	150	°C

(1) Stresses beyond those listed under *Absolute Maximum Ratings* may cause permanent damage to the device. These are stress ratings only, which do not imply functional operation of the device at these or any other conditions beyond those indicated under *Recommended Operating Conditions*. Exposure to absolute-maximum-rated conditions for extended periods may affect device reliability.

(2) All voltage values are with respect to network ground terminal.

6.2 ESD Ratings

			VALUE	UNIT
$V_{(ESD)}$	Electrostatic discharge	Human-body model (HBM), per ANSI/ESDA/JEDEC JS-001(1)	±2000	V
		Charged-device model (CDM), per JEDEC specification JESD22-C101(2)	±500	

(1) JEDEC document JEP155 states that 500-V HBM allows safe manufacturing with a standard ESD control process. Manufacturing with less than 500-V HBM is possible with the necessary precautions. Pins listed as ±2000 V may actually have higher performance.

(2) JEDEC document JEP157 states that 250-V CDM allows safe manufacturing with a standard ESD control process. Manufacturing with less than 250-V CDM is possible with the necessary precautions. Pins listed as ±500 V may actually have higher performance.

6.3 Recommended Operating Conditions

over operating free-air temperature range (unless otherwise noted)

		MIN	NOM	MAX	UNIT
V_{IN}	Input voltage range	0.5		5.5	V
V_{OUT}	Output voltage setting range	2.2		5.5	V
L	Effective inductance range	0.37	1.0	2.9	µH
C_{IN}	Effective input capacitance range	1.0	4.7		µF
C_{OUT}	Effective output capacitance range	4	10	1000	µF
T_J	Operating junction temperature	–40		125	°C

6.4 Thermal Information

THERMAL METRIC(1)		TPS61023 DRL (SOT563) - 6 PINS Standard	TPS61023 DRL (SOT563) - 6 PINS EVM(2)	UNIT
$R_{\theta JA}$	Junction-to-ambient thermal resistance	142.7	91.4	°C/W
$R_{\theta JC}$	Junction-to-case thermal resistance	55.7	N/A	°C/W
$R_{\theta JB}$	Junction-to-board thermal resistance	31.0	N/A	°C/W
Ψ_{JT}	Junction-to-top characterization parameter	1.4	5.3	°C/W
Ψ_{JB}	Junction-to-board characterization parameter	30.7	38.1	°C/W

(1) For more information about traditional and new thermal metrics, see the Semiconductor and IC Package Thermal Metrics application report.

(2) Measured on TPS61023EVM, 4-layer, 2oz copper 50mm×38mm PCB.

Copyright © 2020 Texas Instruments Incorporated

6.5 Electrical Characteristics

T_J = –40°C to 125°C, V_{IN} = 3.6 V and V_{OUT} = 5.0 V. Typical values are at T_J = 25°C (unless otherwise noted)

PARAMETER		TEST CONDITIONS	MIN	TYP	MAX	UNIT
POWER SUPPLY						
V_{IN}	Input voltage range		0.5		5.5	V
V_{IN_UVLO}	Under-voltage lockout threshold	V_{IN} rising		1.7	1.8	V
		V_{IN} falling		0.4	0.5	V
I_Q	Quiescent current into VIN pin	IC enabled, No load, No switching V_{IN} = 1.8 V to 5.5 V, V_{FB} = V_{REF} + 0.1 V, T_J up to 85°C		0.9	3.0	µA
	Quiescent current into VOUT pin	IC enabled, No load, No switching V_{OUT} = 2.2 V to 5.5 V, V_{FB} = V_{REF} + 0.1 V, T_J up to 85°C		20	30	µA
I_{SD}	Shutdown current into VIN and SW pin	IC disabled, V_{IN} = V_{SW} = 3.6 V, T_J = 25°C		0.1	0.2	µA
OUTPUT						
V_{OUT}	Output voltage setting range		2.2		5.5	V
V_{REF}	Reference voltage at the FB pin	PWM mode	580	595	610	mV
		PFM mode	585	601		mV
V_{OVP}	Output over-voltage protection threshold	V_{OUT} rising	5.5	5.7	6.0	V
V_{OVP_HYS}	Over-voltage protection hysteresis			0.1		V
I_{FB_LKG}	Leakage current at FB pin	T_J = 25°C		4	20	nA
		T_J = 125°C		6		nA
I_{VOUT_LKG}	Leakage current into VOUT pin	IC disabled, V_{IN} = 0 V, V_{SW} = 0 V, V_{OUT} = 5.5 V, T_J = 25°C		1	3	µA
t_{SS}	Soft startup time	From active EN to VOUT regulation. V_{IN} = 2.5 V, V_{OUT} = 5.0 V, C_{OUT_EFF} = 10µF, I_{OUT} = 0		700		µs
POWER SWITCH						
$R_{DS(on)}$	High-side MOSFET on resistance	V_{OUT} = 5.0 V		68		mΩ
	Low-side MOSFET on resistance	V_{OUT} = 5.0 V		47		mΩ
f_{SW}	Switching frequency	V_{IN} = 3.6 V, V_{OUT} = 5.0 V, PWM mode		1.0		MHz
		V_{IN} = 1.0 V, V_{OUT} = 5.0 V, PWM mode		0.5		MHz
t_{ON_min}	Minimum on time		40	96	130	ns
t_{OFF_min}	Minimum off time			80	120	ns
I_{LIM_SW}	Valley current limit	V_{IN} = 3.6 V, V_{OUT} = 5.0 V	2.7	3.7		A
I_{LIM_CHG}	Pre-charge current	V_{IN} = 1.8 - 5.5 V, V_{OUT} < 0.4 V	200	350		mA
		V_{IN} = 2.4 V, V_{OUT} = 2.15 V	750	1200		mA
LOGIC INTERFACE						
V_{EN_H}	EN logic high threshold	V_{IN} > 1.8 V or V_{OUT} > 2.2 V			1.2	V
V_{EN_L}	EN logic low threshold	V_{IN} > 1.8 V or V_{OUT} > 2.2 V	0.35	0.42	0.45	
PROTECTION						
T_{SD}	Thermal shutdown threshold	T_J rising		150		°C
T_{SD_HYS}	Thermal shutdown hysteresis	T_J falling below T_{SD}		20		°C

Copyright © 2020 Texas Instruments Incorporated

6.6 Typical Characteristics

V_{IN} = 3.6 V, V_{OUT} = 5 V, T_J = 25°C, unless otherwise noted

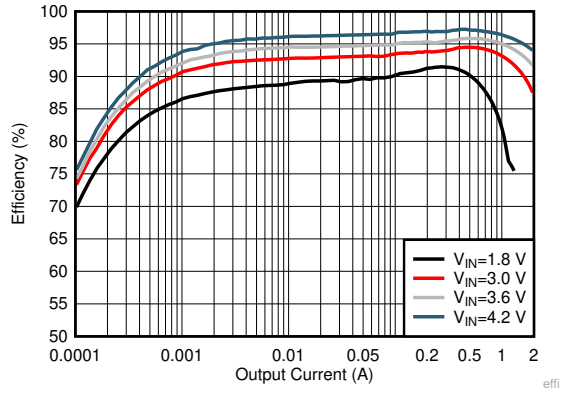

V_{IN} = 1.8 V, 3.0 V, 3.6 V, 4.2 V; V_{OUT} = 5 V

Figure 6-1. Load Efficiency With Different Input

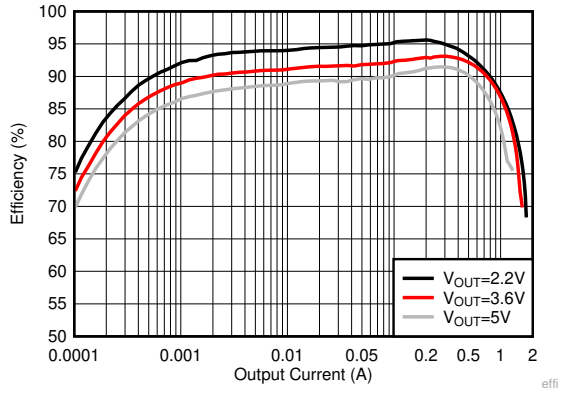

V_{IN} = 1.8 V; V_{OUT} = 2.2 V, 3.6 V, 5 V

Figure 6-2. Load Efficiency With Different Output

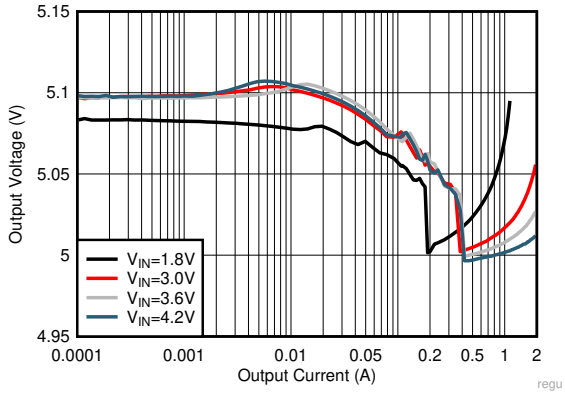

V_{IN} = 1.8 V, 3.0 V, 3.6 V, 4.2 V; V_{OUT} = 5 V

Figure 6-3. Load Regulation

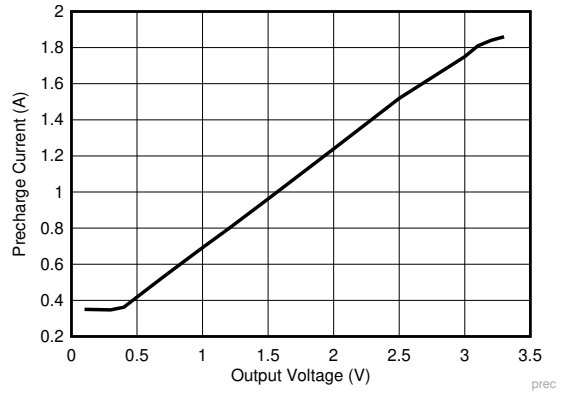

V_{IN} = 3.6 V; V_{OUT} = 0.1 V to 3.3 V

Figure 6-4. Pre-charge Current vs Output Voltage

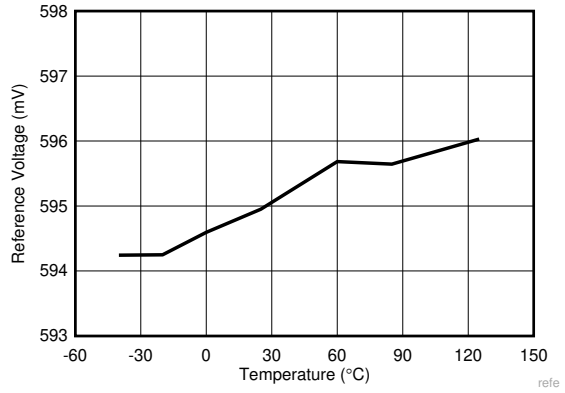

V_{IN} = 3.6 V; V_{OUT} = 5 V, T_J = –40°C to +125°C

Figure 6-5. Reference Voltage vs Temperature

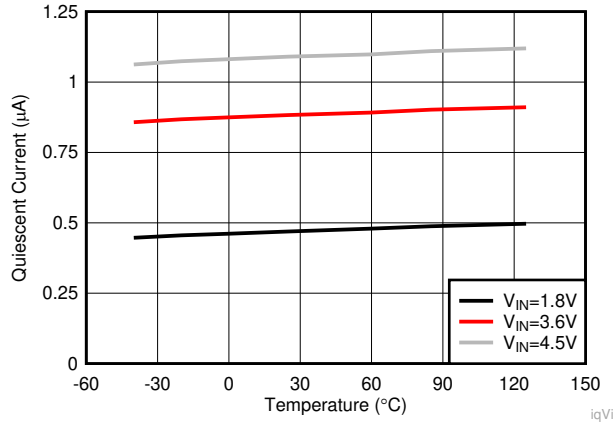

V_{IN} = 1.8 V, 3.6 V 4.5 V; V_{OUT} = 5 V, T_J = –40°C to +125°C, No switching

Figure 6-6. Quiescent Current into VIN vs Temperature

Copyright © 2020 Texas Instruments Incorporated

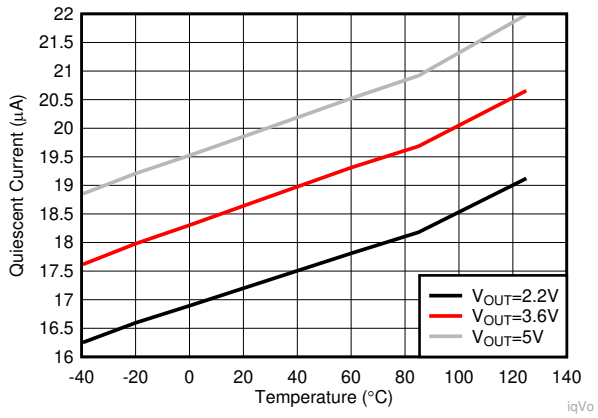

V_{IN} = 1.8 V; V_{OUT} = 2.2 V, 3.6 V, 5 V, T_J = –40°C to +125°C, No switching

Figure 6-7. Quiescent Current into VOUT vs Temperature

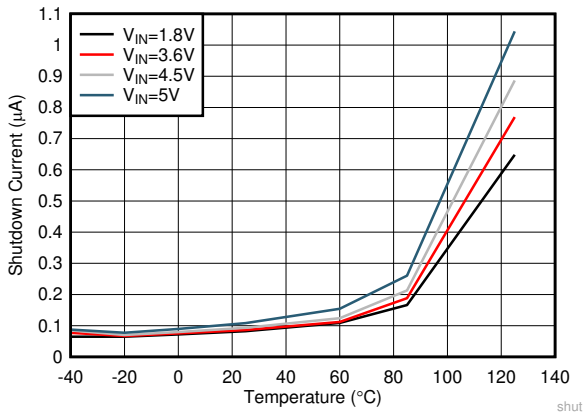

V_{IN} = V_{SW} = 1.8 V, 3.6 V, 4.5 V, 5 V; V_{OUT} = 0 V; T_J = –40°C to +125°C

Figure 6-8. Shutdown Current vs Temperature

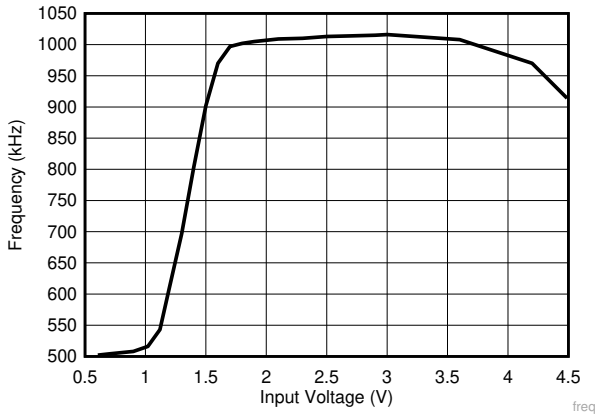

V_{IN} = 0.5 V to 4.5 V; V_{OUT} = 5 V

Figure 6-9. Switching Frequency vs Input Voltage

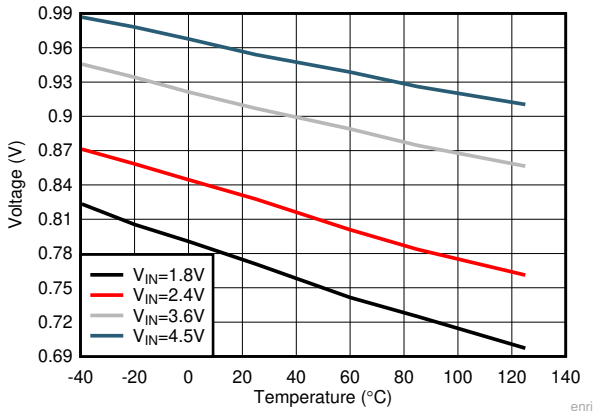

V_{IN} = 1.8 V, 2.4 V, 3.6 V, 4.5 V; V_{OUT} = 0 V; T_J = –40°C to +125°C

Figure 6-10. EN Rising Threshold vs Temperature

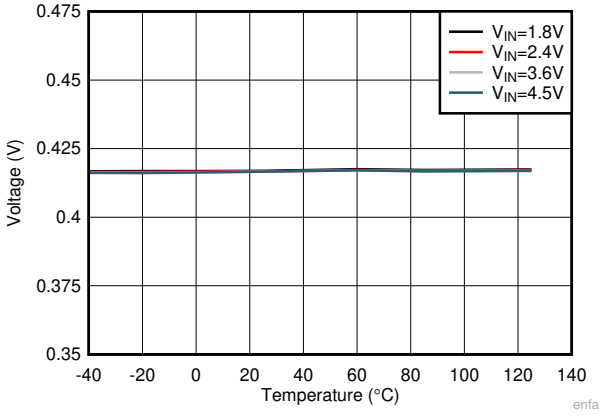

V_{IN} = 1.8 V, 2.4 V, 3.6 V, 4.5 V; V_{OUT} = 0 V; T_J = –40°C to +125°C

Figure 6-11. EN Falling Threshold vs Temperature

Copyright © 2020 Texas Instruments Incorporated

7 Detailed Description

7.1 Overview

The TPS61023 synchronous step-up converter is designed to operate from an input voltage supply range between 0.5 V and 5.5 V with 3.7-A (typical) valley switch current limit. The TPS61023 typically operates at a quasi-constant frequency pulse width modulation (PWM) at moderate to heavy load currents. The switching frequency is 1 MHz when the input voltage is above 1.5 V. The switching frequency reduces down to 0.5 MHz gradually when the input voltage goes down from 1.5 V to 1 V and keeps at 0.5 MHz when the input voltage is below 1 V. At light load conditions, the TPS61023 converter operates in power-save mode with pulse frequency modulation (PFM). During PWM operation, the converter uses adaptive constant on-time valley current mode control scheme to achieve excellent line regulation and load regulation and allows the use of a small inductor and ceramic capacitors. Internal loop compensation simplifies the design process while minimizing the number of external components.

7.2 Functional Block Diagram

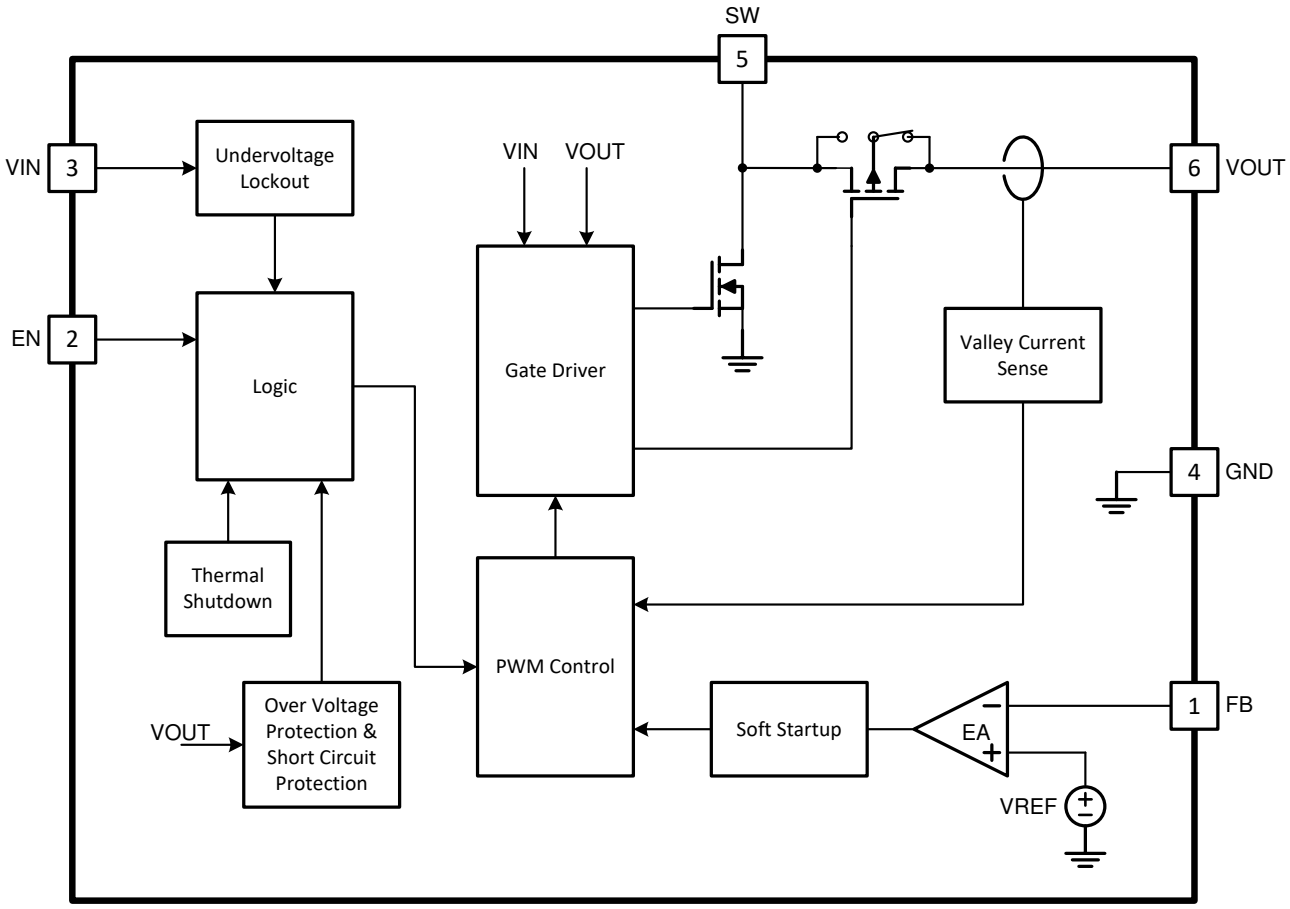

Copyright © 2020 Texas Instruments Incorporated

7.3 Feature Description

7.3.1 Undervoltage Lockout

The TPS61023 has a built-in undervoltage lockout (UVLO) circuit to ensure the device working properly. When the input voltage is above the UVLO rising threshold of 1.8 V, the TPS61023 can be enabled to boost the output voltage. After the TPS61023 starts up and the output voltage is above 2.2 V, the TPS61023 works with input voltage as low as 0.5 V.

7.3.2 Enable and Soft Start

When the input voltage is above the UVLO rising threshold and the EN pin is pulled to a voltage above 1.2 V, the TPS61023 is enabled and starts up. At the beginning, the TPS61023 charges the output capacitors with a current of about 350 mA when the output voltage is below 0.4 V. When the output voltage is charged above 0.4 V, the output current is changed to having output current capability to drive the 2-Ω resistance load. After the output voltage reaches the input voltage, the TPS61023 starts switching, and the output voltage ramps up further. The typical start-up time is 700 µs accounting from EN high to output reaching target voltage for the application with input voltage is 2.5 V, output voltage is 5 V, output effective capacitance is 10 µF, and no load. When the voltage at the EN pin is below 0.4 V, the internal enable comparator turns the device into shutdown mode. In the shutdown mode, the device is entirely turned off. The output is disconnected from input power supply.

7.3.3 Switching Frequency

The TPS61023 switches at a quasi-constant 1-MHz frequency when the input voltage is above 1.5 V. When the input voltage is lower than 1.5 V, the switching frequency is reduced gradually to 0.5 MHz to improve the efficiency and get higher boost ratio. When the input voltage is below 1 V, the switching frequency is fixed at a quasi-constant 0.5 MHz.

7.3.4 Current Limit Operation

The TPS61023 uses a valley current limit sensing scheme. Current limit detection occurs during the off-time by sensing of the voltage drop across the synchronous rectifier.

When the load current is increased such that the inductor current is above the current limit within the whole switching cycle time, the off-time is increased to allow the inductor current to decrease to this threshold before the next on-time begins (so called frequency foldback mechanism). When the current limit is reached, the output voltage decreases during further load increase.

The maximum continuous output current ($I_{OUT(LC)}$), before entering current limit (CL) operation, can be defined by Equation 1.

$$I_{OUT(CL)} = (1-D) \times \left(I_{LIM} + \frac{1}{2} \Delta I_{L(P-P)} \right) \quad (1)$$

where

- D is the duty cycle
- $\Delta I_{L(P-P)}$ is the inductor ripple current

The duty cycle can be estimated by Equation 2.

$$D = 1 - \frac{V_{IN} \times \eta}{V_{OUT}} \quad (2)$$

where

- V_{OUT} is the output voltage of the boost converter
- V_{IN} is the input voltage of the boost converter
- η is the efficiency of the converter, use 90% for most applications

Copyright © 2020 Texas Instruments Incorporated

The peak-to-peak inductor ripple current is calculated by Equation 3.

$$\Delta I_{L(P-P)} = \frac{V_{IN} \times D}{L \times f_{SW}} \quad (3)$$

where

- L is the inductance value of the inductor
- f_{SW} is the switching frequency
- D is the duty cycle
- V_{IN} is the input voltage of the boost converter

7.3.5 Pass-Through Operation

When the input voltage is higher than the setting output voltage, the output voltage is higher than the target regulation voltage. When the output voltage is 101% of the setting target voltage, the TPS61023 stops switching and fully turns on the high-side PMOS FET. The device works in pass-through mode. The output voltage is the input voltage minus the voltage drop across the DCR of the inductor and the $R_{DS(on)}$ of the PMOS FET. When the output voltage drops below the 97% of the setting target voltage as the input voltage declines or the load current increases, the TPS61023 resumes switching again to regulate the output voltage.

7.3.6 Overvoltage Protection

The TPS61023 has an output overvoltage protection (OVP) to protect the device if the external feedback resistor divider is wrongly populated. When the output voltage is above 5.7 V typically, the device stops switching. Once the output voltage falls 0.1 V below the OVP threshold, the device resumes operating again.

7.3.7 Output Short-to-Ground Protection

The TPS61023 starts to limit the output current when the output voltage is below 1.8 V. The lower the output voltage reaches, the smaller the output current is. When the VOUT pin is short to ground, and the output voltage becomes less than 0.4 V, the output current is limited to approximately 350 mA. Once the short circuit is released, the TPS61023 goes through the soft start-up again to the regulated output voltage.

7.3.8 Thermal Shutdown

The TPS61023 goes into thermal shutdown once the junction temperature exceeds 150°C. When the junction temperature drops below the thermal shutdown recovery temperature, typically 130°C, the device starts operating again.

7.4 Device Functional Modes

The TPS61023 has two switching operation modes, PWM mode in moderate to heavy load conditions and power save mode with pulse frequency modulation (PFM) in light load conditions.

7.4.1 PWM Mode

The TPS61023 uses a quasi-constant 1.0-MHz frequency pulse width modulation (PWM) at moderate to heavy load current. Based on the input voltage to output voltage ratio, a circuit predicts the required on-time. At the beginning of the switching cycle, the NMOS switching FET. The input voltage is applied across the inductor and the inductor current ramps up. In this phase, the output capacitor is discharged by the load current. When the on-time expires, the main switch NMOS FET is turned off, and the rectifier PMOS FET is turned on. The inductor transfers its stored energy to replenish the output capacitor and supply the load. The inductor current declines because the output voltage is higher than the input voltage. When the inductor current hits the valley current threshold determined by the output of the error amplifier, the next switching cycle starts again.

The TPS61023 has a built-in compensation circuit that can accommodate a wide range of input voltage, output voltage, inductor value, and output capacitor value for stable operation.

Copyright © 2020 Texas Instruments Incorporated

7.4.2 Power-Save Mode

The TPS61023 integrates a power-save mode with PFM to improve efficiency at light load. When the load current decreases, the inductor valley current set by the output of the error amplifier no longer regulates the output voltage. When the inductor valley current hits the low limit, the output voltage exceeds the setting voltage as the load current decreases further. When the FB voltage hits the PFM reference voltage, the TPS61023 goes into the power-save mode. In the power-save mode, when the FB voltage rises and hits the PFM reference voltage, the device continues switching for several cycles because of the delay time of the internal comparator — then it stops switching. The load is supplied by the output capacitor, and the output voltage declines. When the FB voltage falls below the PFM reference voltage, after the delay time of the comparator, the device starts switching again to ramp up the output voltage.

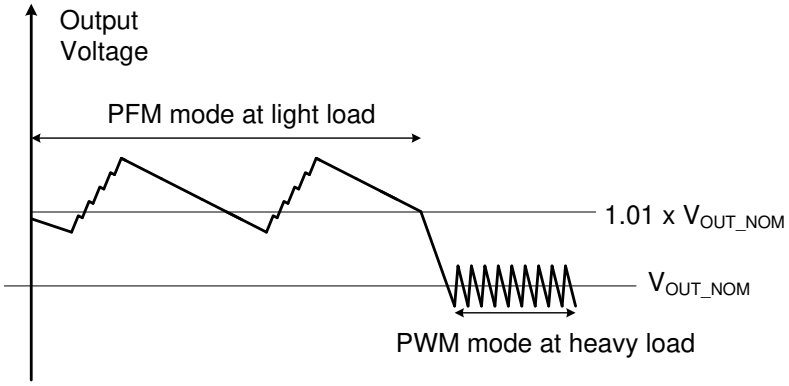

Figure 7-1. Output Voltage in PWM Mode and PFM Mode

8 Application and Implementation

Note

Information in the following applications sections is not part of the TI component specification, and TI does not warrant its accuracy or completeness. TI's customers are responsible for determining suitability of components for their purposes. Customers should validate and test their design implementation to confirm system functionality.

8.1 Application Information

The TPS61023 is a synchronous boost converter designed to operate from an input voltage supply range between 0.5 V and 5.5 V with a typically 3.7-A valley switch current limit. The TPS61023 typically operates at a quasi-constant 1-MHz frequency PWM at moderate-to-heavy load currents when the input voltage is above 1.5 V. The switching frequency changes to 0.5 MHz gradually with the input voltage changing from 1.5 V to 1 V for better efficiency and high step-up ratio. When the input voltage is below 1 V, the switching frequency is fixed at a quasi-constant 0.5 MHz. At light load currents, the TPS61023 converter operates in power-save mode with PFM to achieve high efficiency over the entire load current range.

8.2 Typical Application

The TPS61023 provides a power supply solution for portable devices powered by batteries or backup applications powered by super-capacitors. With typical 3.7-A switch current capability, the TPS61023 can output 5 V and 1.5 A from a single-cell Li-ion battery.

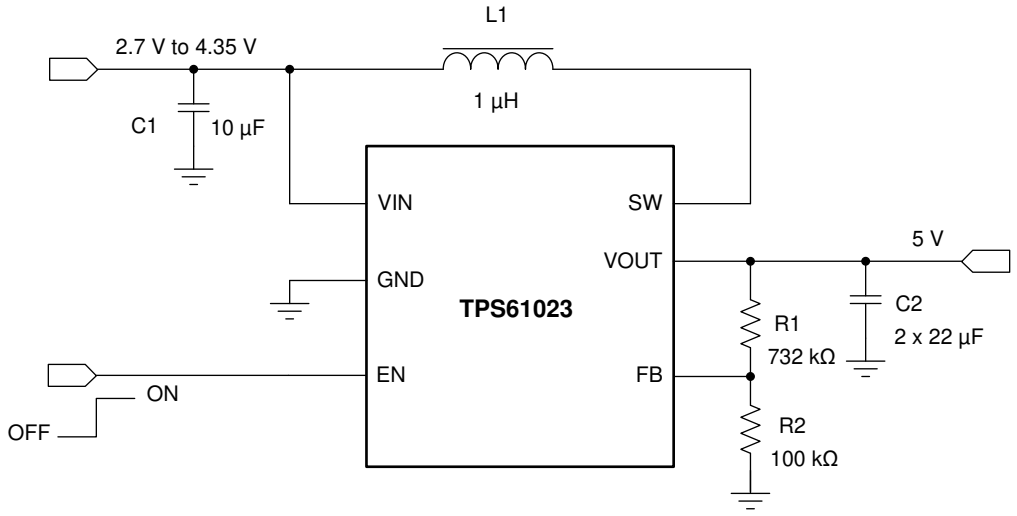

Figure 8-1. Li-ion Battery to 5-V Boost Converter

8.2.1 Design Requirements

The design parameters are listed in Table 8-1.

Table 8-1. Design Parameters

PARAMETERS	VALUES
Input voltage	2.7 V to 4.35 V
Output voltage	5 V
Output current	1.5 A
Output voltage ripple	±50 mV

Copyright © 2020 Texas Instruments Incorporated

8.2.2 Detailed Design Procedure

8.2.2.1 Setting the Output Voltage

The output voltage is set by an external resistor divider (R1, R2 in Figure 8-1). When the output voltage is regulated, the typical voltage at the FB pin is V_{REF}. Thus the resistor divider is determined by Equation 4.

$$R1 = \left(\frac{V_{OUT}}{V_{REF}} - 1 \right) \times R2 \tag{4}$$

where

- V_{OUT} is the regulated output voltage
- V_{REF} is the internal reference voltage at the FB pin

For the best accuracy, should be kept R2 smaller than 300 kΩ to ensure the current flowing through R2 is at least 100 times larger than the FB pin leakage current. Changing R2 towards a lower value increases the immunity against noise injection. Changing the R2 towards a higher value reduces the quiescent current for achieving highest efficiency at low load currents.

8.2.2.2 Inductor Selection

Because the selection of the inductor affects steady-state operation, transient behavior, and loop stability. The inductor is the most important component in power regulator design. There are three important inductor specifications, inductor value, saturation current, and dc resistance (DCR).

The TPS61023 is designed to work with inductor values between 0.37 µH and 2.9 µH. Follow Equation 5 to Equation 7 to calculate the inductor peak current for the application. To calculate the current in the worst case, use the minimum input voltage, maximum output voltage, and maximum load current of the application. To have enough design margins, choose the inductor value with –30% tolerances, and low power-conversion efficiency for the calculation.

In a boost regulator, the inductor dc current can be calculated by Equation 5.

$$I_{L(DC)} = \frac{V_{OUT} \times I_{OUT}}{V_{IN} \times \eta} \tag{5}$$

where

- V_{OUT} is the output voltage of the boost converter
- I_{OUT} is the output current of the boost converter
- V_{IN} is the input voltage of the boost converter
- η is the power conversion efficiency, use 90% for most applications

The inductor ripple current is calculated by Equation 6.

$$\Delta I_{L(P-P)} = \frac{V_{IN} \times D}{L \times f_{SW}} \tag{6}$$

where

- D is the duty cycle, which can be calculated by Equation 2
- L is the inductance value of the inductor
- f_{SW} is the switching frequency
- V_{IN} is the input voltage of the boost converter

Therefore, the inductor peak current is calculated by Equation 7.

Copyright © 2020 Texas Instruments Incorporated

$$I_{L(P)} = I_{L(DC)} + \frac{\Delta I_{L(P-P)}}{2} \quad (7)$$

Normally, it is advisable to work with an inductor peak-to-peak current of less than 40% of the average inductor current for maximum output current. A smaller ripple from a larger valued inductor reduces the magnetic hysteresis losses in the inductor and EMI. But in the same way, load transient response time is increased. The saturation current of the inductor must be higher than the calculated peak inductor current. Table 8-2 lists the recommended inductors for the TPS61023.

Table 8-2. Recommended Inductors for the TPS61023

PART NUMBER(1)	L (µH)	DCR MAX (mΩ)	SATURATION CURRENT (A)	SIZE (LxWxH)	VENDOR
XEL4030-102ME	1	9.78	9.0	4.0 × 4.0 × 3.1	Coilcraft
74438357010	1	13.5	9.6	4.1 x 4.1 x 3.1	Wurth Elecktronik
HBME042A-1R0MS-99	1	11.5	7.0	4.1 x 4.1 x 2.1	Cyntec

(1) See *Third-party Products* disclaimer

8.2.2.3 Output Capacitor Selection

The output capacitor is mainly selected to meet the requirements for output ripple and loop stability. The ripple voltage is related to capacitor capacitance and its equivalent series resistance (ESR). Assuming a ceramic capacitor with zero ESR, the minimum capacitance needed for a given ripple voltage can be calculated by Equation 8.

$$C_{OUT} = \frac{I_{OUT} \times D_{MAX}}{f_{SW} \times V_{RIPPLE}} \quad (8)$$

where

- D_{MAX} is the maximum switching duty cycle
- V_{RIPPLE} is the peak-to-peak output ripple voltage
- I_{OUT} is the maximum output current
- f_{SW} is the switching frequency

The ESR impact on the output ripple must be considered if tantalum or aluminum electrolytic capacitors are used. The output peak-to-peak ripple voltage caused by the ESR of the output capacitors can be calculated by Equation 9.

$$V_{RIPPLE(ESR)} = I_{L(P)} \times R_{ESR} \quad (9)$$

Take care when evaluating the derating of a ceramic capacitor under dc bias voltage, aging, and ac signal. For example, the dc bias voltage can significantly reduce capacitance. A ceramic capacitor can lose more than 50% of its capacitance at its rated voltage. Therefore, always leave margin on the voltage rating to ensure adequate capacitance at the required output voltage. Increasing the output capacitor makes the output ripple voltage smaller in PWM mode.

TI recommends using the X5R or X7R ceramic output capacitor in the range of 4-µF to 1000-µF effective capacitance. The output capacitor affects the small signal control loop stability of the boost regulator. If the output capacitor is below the range, the boost regulator can potentially become unstable. Increasing the output capacitor makes the output ripple voltage smaller in PWM mode.

8.2.2.4 Loop Stability, Feedforward Capacitor Selection

When the switching waveform shows large duty cycle jitter or the output voltage or inductor current shows oscillations, the regulation loop can be unstable.

Copyright © 2020 Texas Instruments Incorporated

The load transient response is another approach to check the loop stability. During the load transient recovery time, V_{OUT} can be monitored for settling time, overshoot or ringing that helps judge the stability of the converters. Without any ringing, the loop has usually more than 45° of phase margin.

A feedforward capacitor (C3 in the Figure 8-2) in parallel with R1 induces a pair of zero and pole in the loop transfer function. By setting the proper zero frequency, the feedforward capacitor can increase the phase margin to improve the loop stability. For large output capacitance more than 40 µF application, TI recommends a feedforward capacitor to set the zero frequency (f_{FFZ}) to 1 kHz. As for the input voltage lower than 1-V application, TI recommends to use the effective output capacitance is about 100 µF and set the zero frequency (f_{FFZ}) to 1 kHz. The value of the feedforward capacitor can be calculated by Equation 10.

$$C3 = \frac{1}{2\pi \times f_{FFZ} \times R1} \tag{10}$$

where

- R1 is the resistor between the VOUT pin and FB pin
- f_{FFZ} is the zero frequency created by the feedforward capacitor

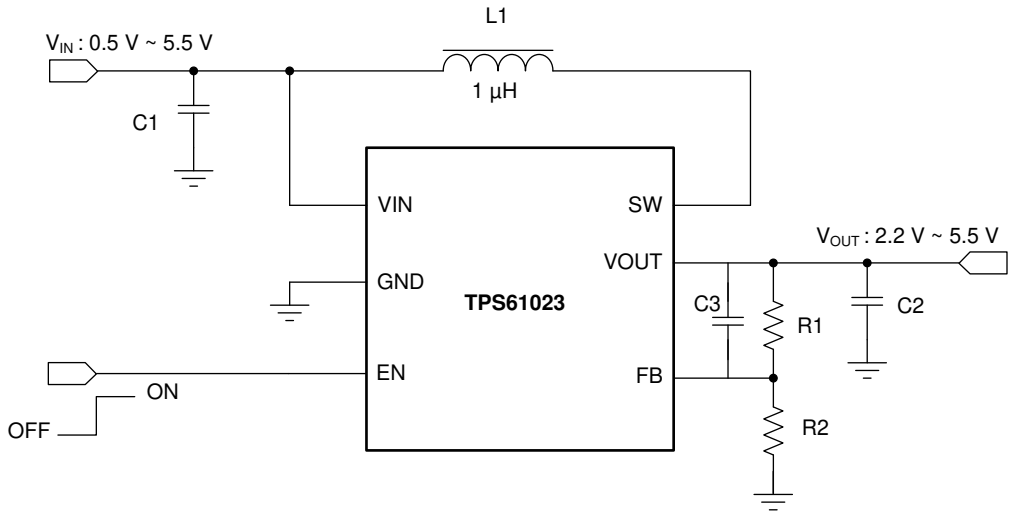

Figure 8-2. TPS61023 Circuit With Feedforward Capacitor

8.2.2.5 Input Capacitor Selection

Multilayer X5R or X7R ceramic capacitors are excellent choices for the input decoupling of the step-up converter as they have extremely low ESR and are available in small footprints. Input capacitors must be located as close as possible to the device. While a 10-µF input capacitor is sufficient for most applications, larger values may be used to reduce input current ripple without limitations. Take care when using only ceramic input capacitors. When a ceramic capacitor is used at the input and the power is being supplied through long wires, a load step at the output can induce ringing at the VIN pin. This ringing can couple to the output and be mistaken as loop instability or could even damage the part. In this circumstance, place additional bulk capacitance (tantalum or aluminum electrolytic capacitor) between ceramic input capacitor and the power source to reduce ringing that can occur between the inductance of the power source leads and ceramic input capacitor.

Copyright © 2020 Texas Instruments Incorporated

8.2.3 Application Curves

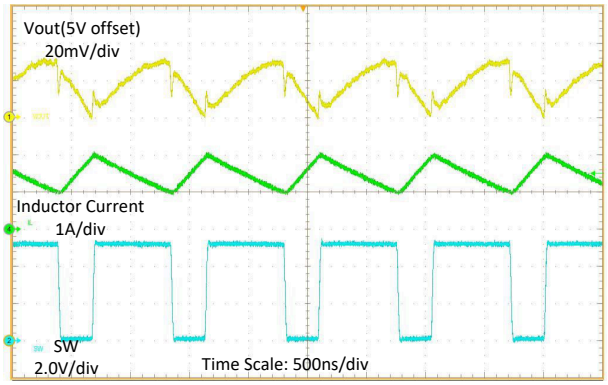

V_{IN} = 3.6 V, V_{OUT} = 5 V, I_{OUT} = 1 A

Figure 8-3. Switching Waveform at Heavy Load

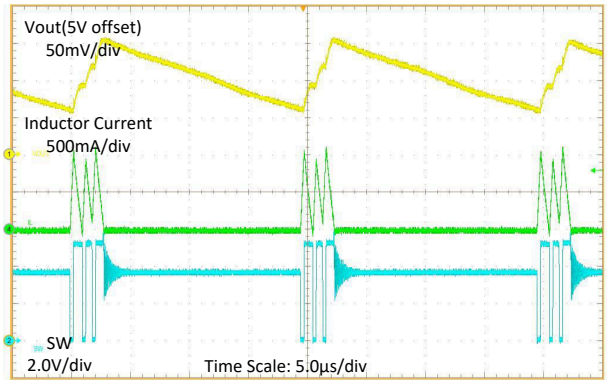

V_{IN} = 3.6 V, V_{OUT} = 5 V, I_{OUT} = 50 mA

Figure 8-4. Switching Waveform at Light Load

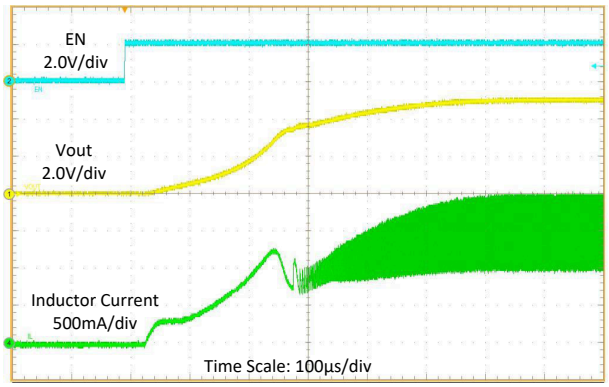

V_{IN} = 3.6 V, V_{OUT} = 5 V, 5-Ω resistance load

Figure 8-5. Start-up Waveform

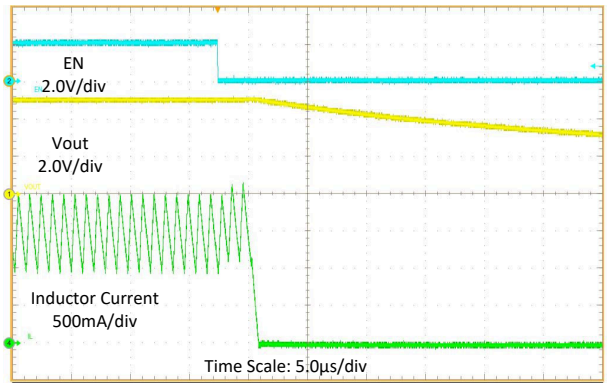

V_{IN} = 3.6 V, V_{OUT} = 5 V, 5-Ω resistance load

Figure 8-6. Shutdown Waveform

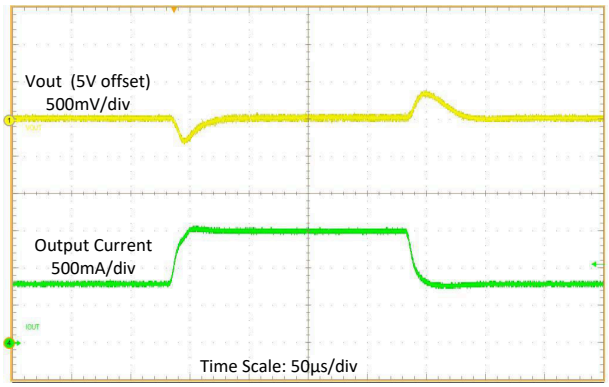

V_{IN} = 3.6 V, V_{OUT} = 5 V, I_{OUT} = 800 mA to 1.5 A with 20-µs slew rate

Figure 8-7. Load Transient

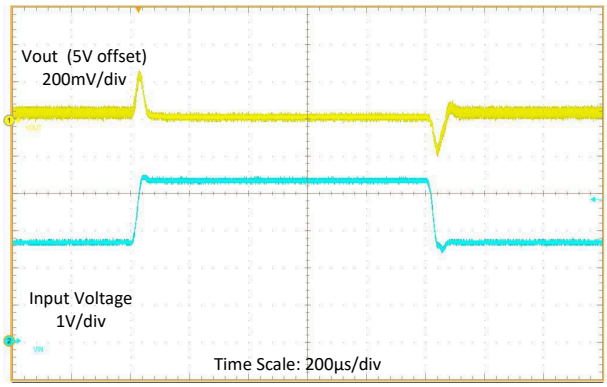

V_{IN} = 2.7 V to 4.35 V with 20-µs slew rate, V_{OUT} = 5 V
I_{OUT} = 1 A

Figure 8-8. Line Transient

Copyright © 2020 Texas Instruments Incorporated

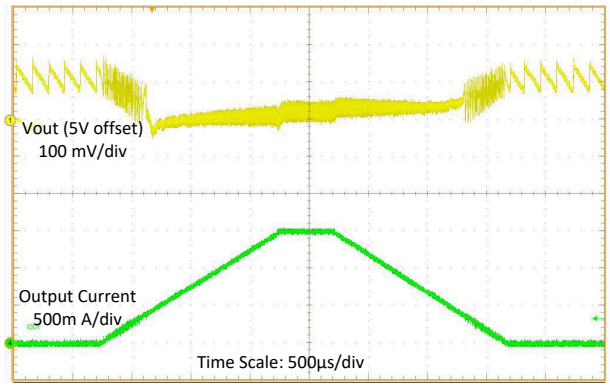

V_{IN} = 3.6 V, V_{OUT} = 5 V, I_{OUT} = 0 A to 1.5 A Sweep

Figure 8-9. Load Sweep

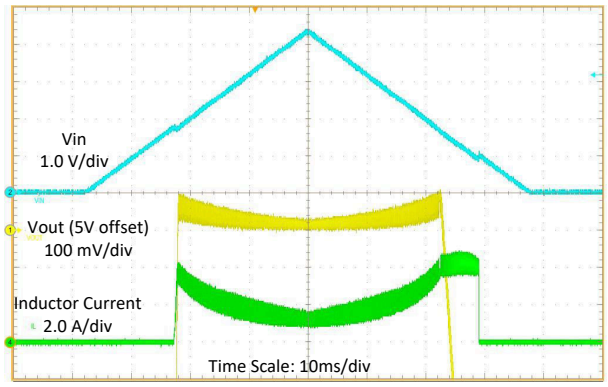

V_{IN} = 0 V to 4.35 V Sweep, V_{OUT} = 5 V, 5-Ω resistance load

Figure 8-10. Line Sweep

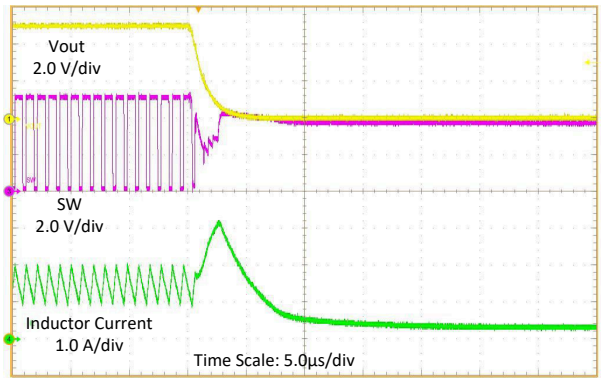

V_{IN} = 3.6 V, V_{OUT} = 5 V, I_{OUT} = 1 A

Figure 8-11. Output Short Protection (Entry)

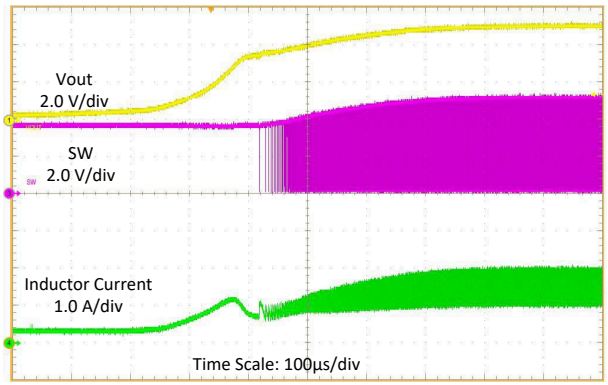

V_{IN} = 3.6 V, V_{OUT} = 5 V, I_{OUT} = 1 A

Figure 8-12. Output Short Protection (Recover)

9 Power Supply Recommendations

The device is designed to operate from an input voltage supply range between 0.5 V to 5.5 V. This input supply must be well regulated. If the input supply is located more than a few inches from the converter, additional bulk capacitance may be required in addition to the ceramic bypass capacitors. A typical choice is a tantalum or aluminum electrolytic capacitor with a value of 100 µF. Output current of the input power supply must be rated according to the supply voltage, output voltage, and output current of the TPS61023.

Copyright © 2020 Texas Instruments Incorporated

10 Layout

10.1 Layout Guidelines

As for all switching power supplies, especially those running at high switching frequency and high currents, layout is an important design step. If the layout is not carefully done, the regulator could suffer from instability and noise problems. To maximize efficiency, switch rise and fall time are very fast. To prevent radiation of high frequency noise (for example, EMI), proper layout of the high-frequency switching path is essential. Minimize the length and area of all traces connected to the SW pin, and always use a ground plane under the switching regulator to minimize interplane coupling. The input capacitor needs not only to be close to the VIN pin, but also to the GND pin in order to reduce input supply ripple.

The most critical current path for all boost converters is from the switching FET, through the rectifier FET, then the output capacitors, and back to ground of the switching FET. This high current path contains nanosecond rise and fall time and must be kept as short as possible. Therefore, the output capacitor not only must be close to the VOUT pin, but also to the GND pin to reduce the overshoot at the SW pin and VOUT pin.

For better thermal performance, TI suggest to make copper polygon connected with each pin bigger.

10.2 Layout Example

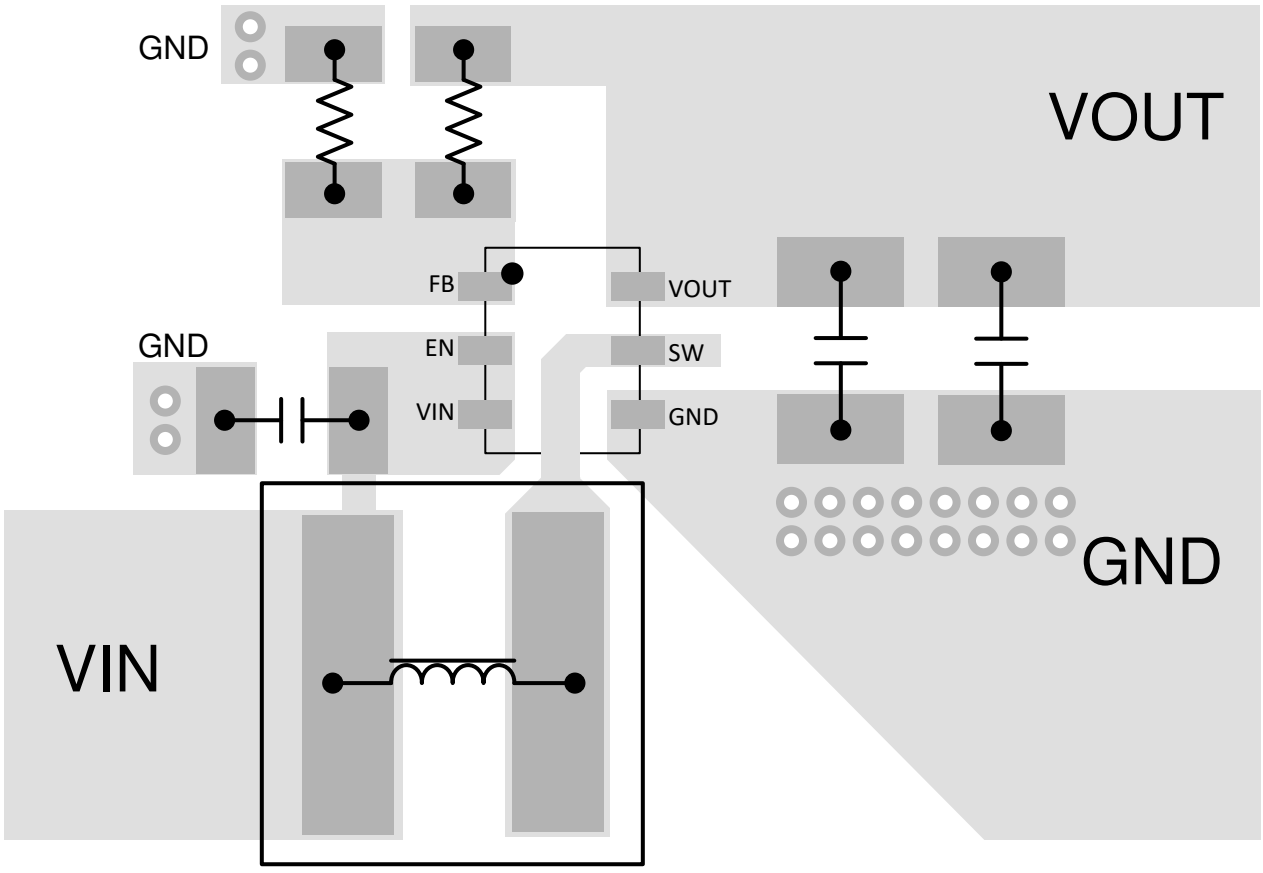

Figure 10-1. Layout Example

Copyright © 2020 Texas Instruments Incorporated

10.3 Thermal Considerations

Restrict the maximum IC junction temperature to 125°C under normal operating conditions. Calculate the maximum allowable dissipation, $P_{D(max)}$, and keep the actual power dissipation less than or equal to $P_{D(max)}$. The maximum-power-dissipation limit is determined using Equation 11.

$$P_{D(max)} = \frac{125 - T_A}{R_{\theta JA}} \tag{11}$$

where

- T_A is the maximum ambient temperature for the application
- $R_{\theta JA}$ is the junction-to-ambient thermal resistance given in *Thermal Information*

The TPS61023 comes in a SOT563 package. The real junction-to-ambient thermal resistance of the package greatly depends on the PCB type, layout. Using larger and thicker PCB copper for the power pads (GND, SW, and VOUT) to enhance the thermal performance. Using more vias connects the ground plate on the top layer and bottom layer around the IC without solder mask also improves the thermal capability.

Copyright © 2020 Texas Instruments Incorporated

11 Device and Documentation Support

11.1 Device Support

11.1.1 Third-Party Products Disclaimer

TI'S PUBLICATION OF INFORMATION REGARDING THIRD-PARTY PRODUCTS OR SERVICES DOES NOT CONSTITUTE AN ENDORSEMENT REGARDING THE SUITABILITY OF SUCH PRODUCTS OR SERVICES OR A WARRANTY, REPRESENTATION OR ENDORSEMENT OF SUCH PRODUCTS OR SERVICES, EITHER ALONE OR IN COMBINATION WITH ANY TI PRODUCT OR SERVICE.

11.2 Receiving Notification of Documentation Updates

To receive notification of documentation updates, navigate to the device product folder on ti.com. Click on *Subscribe to updates* to register and receive a weekly digest of any product information that has changed. For change details, review the revision history included in any revised document.

11.3 Support Resources

TI E2E™ support forums are an engineer's go-to source for fast, verified answers and design help — straight from the experts. Search existing answers or ask your own question to get the quick design help you need.

Linked content is provided "AS IS" by the respective contributors. They do not constitute TI specifications and do not necessarily reflect TI's views; see TI's Terms of Use.

11.4 Trademarks

TI E2E™ is a trademark of Texas Instruments.
All trademarks are the property of their respective owners.

11.5 Electrostatic Discharge Caution



This integrated circuit can be damaged by ESD. Texas Instruments recommends that all integrated circuits be handled with appropriate precautions. Failure to observe proper handling and installation procedures can cause damage.

ESD damage can range from subtle performance degradation to complete device failure. Precision integrated circuits may be more susceptible to damage because very small parametric changes could cause the device not to meet its published specifications.

11.6 Glossary

TI Glossary This glossary lists and explains terms, acronyms, and definitions.

12 Mechanical, Packaging, and Orderable Information

The following pages include mechanical, packaging, and orderable information. This information is the most current data available for the designated devices. This data is subject to change without notice and revision of this document. For browser-based versions of this data sheet, refer to the left-hand navigation.

Copyright © 2020 Texas Instruments Incorporated

12.1 Package Option Addendum

Packaging Information

Orderable Device	Status(1)	Package Type	Package Drawing	Pins	Package Qty	Eco Plan(2)	Lead/Ball Finish(6)	MSL Peak Temp(3)	Op Temp (°C)	Device Marking(4) (5)
TPS61023DRLR	ACTIVE	SOT-5X3	DRL	6	4000	Green (RoHS & no Sb/Br)	Call TISN	Level-1-260-UNLIM	-40 to 125	1GI

1. The marketing status values are defined as follows:

   ACTIVE: Product device recommended for new designs.

   LIFEBUY: TI has announced that the device will be discontinued, and a lifetime-buy period is in effect.

   NRND: Not recommended for new designs. Device is in production to support existing customers, but TI does not recommend using this part in a new design.

   PRE_PROD Unannounced device, not in production, not available for mass market, nor on the web, samples not available.

   PREVIEW: Device has been announced but is not in production. Samples may or may not be available.

   OBSOLETE: TI has discontinued the production of the device.
2. Eco Plan - The planned eco-friendly classification: Pb-Free (RoHS), Pb-Free (RoHS Exempt), or Green (RoHS & no Sb/Br) - please check www.ti.com/productcontent for the latest availability information and additional product content details.

   TBD: The Pb-Free/Green conversion plan has not been defined.

   Pb-Free (RoHS): TI's terms "Lead-Free" or "Pb-Free" mean semiconductor products that are compatible with the current RoHS requirements for all 6 substances, including the requirement that lead not exceed 0.1% by weight in homogeneous materials. Where designed to be soldered at high temperatures, TI Pb-Free products are suitable for use in specified lead-free processes.

   Pb-Free (RoHS Exempt): This component has a RoHS exemption for either 1) lead-based flip-chip solder bumps used between the die and package, or 2) lead-based die adhesive used between the die and leadframe. The component is otherwise considered Pb-Free (RoHS compatible) as defined above.

   Green (RoHS & no Sb/Br): TI defines "Green" to mean Pb-Free (RoHS compatible), and free of Bromine (Br) and Antimony (Sb) based flame retardants (Br or Sb do not exceed 0.1% by weight in homogeneous material).
3. MSL, Peak Temp. -- The Moisture Sensitivity Level rating according to the JEDEC industry standard classifications, and peak solder temperature.
4. There may be additional marking, which relates to the logo, the lot trace code information, or the environmental category on the device.
5. Multiple Device markings will be inside parentheses. Only one Device Marking contained in parentheses and separated by a "~" will appear on a device. If a line is indented then it is a continuation of the previous line and the two combined represent the entire Device Marking for that device.
6. Lead/Ball Finish - Orderable Devices may have multiple material finish options. Finish options are separated by a vertical ruled line. Lead/Ball Finish values may wrap to two lines if the finish value exceeds the maximum column width.

Copyright © 2020 Texas Instruments Incorporated

Important Information and Disclaimer: The information provided on this page represents TI's knowledge and belief as of the date that it is provided. TI bases its knowledge and belief on information provided by third parties, and makes no representation or warranty as to the accuracy of such information. Efforts are underway to better integrate information from third parties. TI has taken and continues to take reasonable steps to provide representative and accurate information but may not have conducted destructive testing or chemical analysis on incoming materials and chemicals. TI and TI suppliers consider certain information to be proprietary, and thus CAS numbers and other limited information may not be available for release.

In no event shall TI's liability arising out of such information exceed the total purchase price of the TI part(s) at issue in this document sold by TI to Customer on an annual basis.

Copyright © 2020 Texas Instruments Incorporated

12.2 Tape and Reel Information

REEL DIMENSIONS

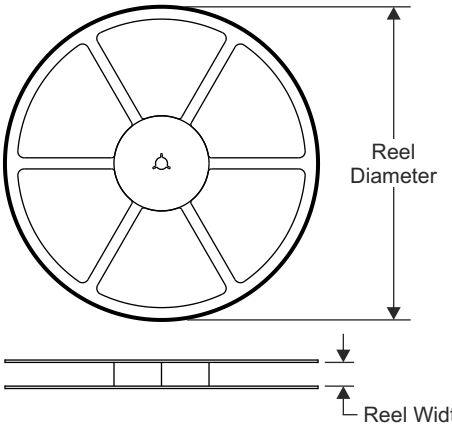

TAPE DIMENSIONS

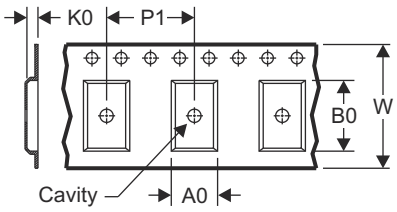

A0	Dimension designed to accommodate the component width
B0	Dimension designed to accommodate the component length
K0	Dimension designed to accommodate the component thickness
W	Overall width of the carrier tape
P1	Pitch between successive cavity centers

QUADRANT ASSIGNMENTS FOR PIN 1 ORIENTATION IN TAPE

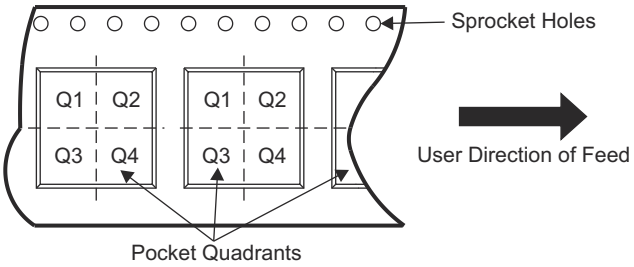

Device	Package Type	Package Drawing	Pins	SPQ	Reel Diameter (mm)	Reel Width W1 (mm)	A0 (mm)	B0 (mm)	K0 (mm)	P1 (mm)	W (mm)	Pin1 Quadrant
TPS61023DRLR	SOT-5X3	DRL	6	4000	180.0	8.4	2.0	1.8	0.75	4.0	8.0	Q3

Copyright © 2020 Texas Instruments Incorporated

TAPE AND REEL BOX DIMENSIONS

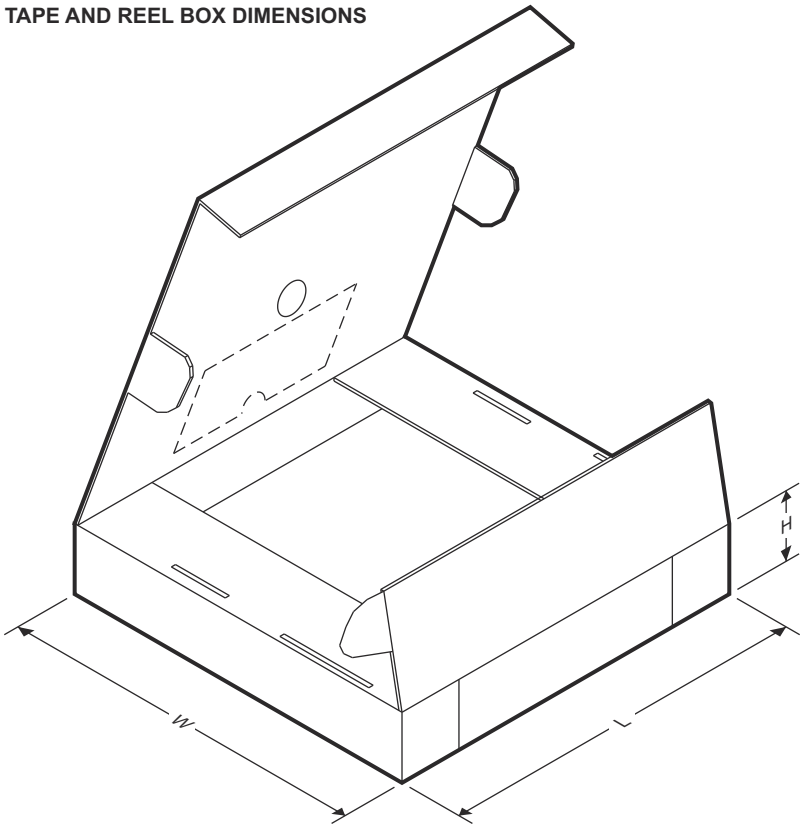

Device	Package Type	Package Drawing	Pins	SPQ	Length (mm)	Width (mm)	Height (mm)
TPS61023DRLR	SOT-5X3	DRL	6	4000	182.0	182.0	20.0

Copyright © 2020 Texas Instruments Incorporated



PACKAGE OUTLINE

DRL0006A

SOT - 0.6 mm max height

PLASTIC SMALL OUTLINE

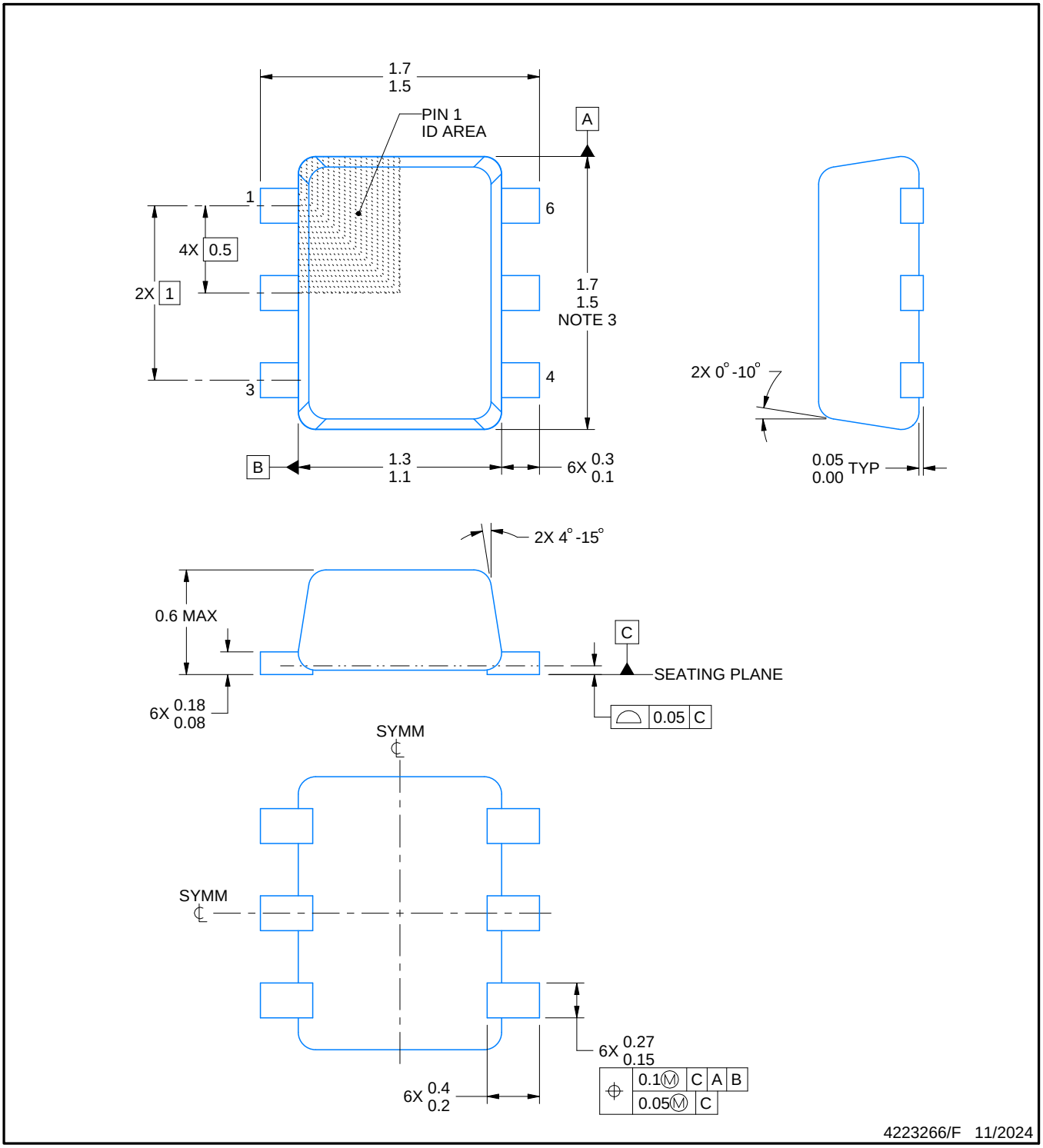

NOTES:

1. All linear dimensions are in millimeters. Any dimensions in parenthesis are for reference only. Dimensioning and tolerancing per ASME Y14.5M.
2. This drawing is subject to change without notice.
3. This dimension does not include mold flash, protrusions, or gate burrs. Mold flash, protrusions, or gate burrs shall not exceed 0.15 mm per side.
4. Reference JEDEC registration MO-293 Variation UAAD

EXAMPLE BOARD LAYOUT

DRL0006A

SOT - 0.6 mm max height

PLASTIC SMALL OUTLINE

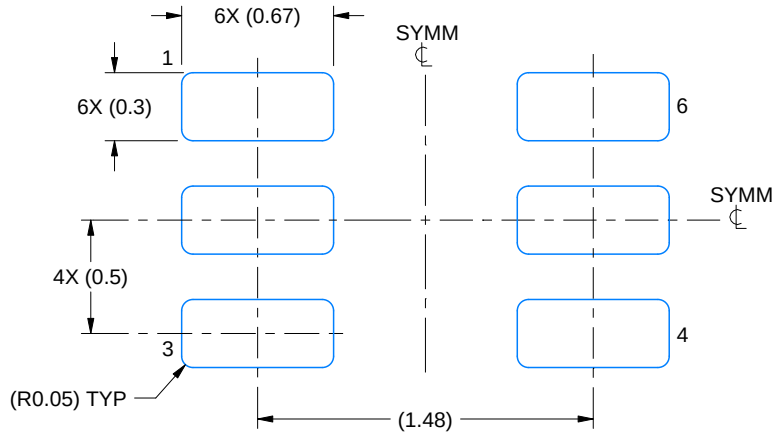

LAND PATTERN EXAMPLE
SCALE:30X

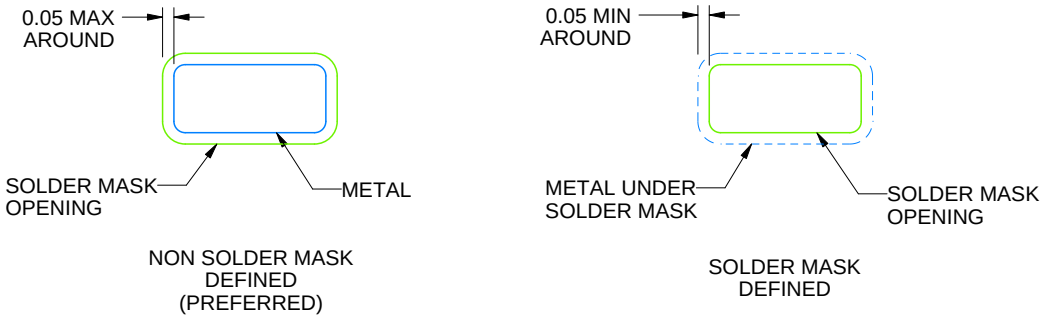

SOLDERMASK DETAILS

4223266/F 11/2024

NOTES: (continued)

5. Publication IPC-7351 may have alternate designs.
6. Solder mask tolerances between and around signal pads can vary based on board fabrication site.
7. Land pattern design aligns to IPC-610, Bottom Termination Component (BTC) solder joint inspection criteria.

EXAMPLE STENCIL DESIGN

DRL0006A

SOT - 0.6 mm max height

PLASTIC SMALL OUTLINE

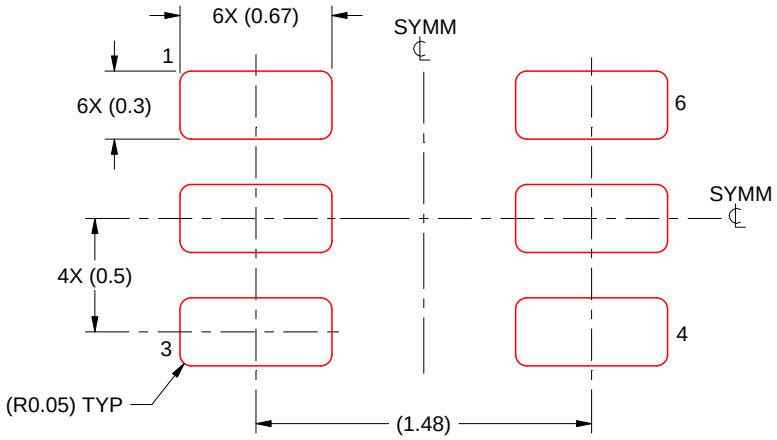

SOLDER PASTE EXAMPLE
BASED ON 0.1 mm THICK STENCIL
SCALE:30X

4223266/F 11/2024

NOTES: (continued)

8. Laser cutting apertures with trapezoidal walls and rounded corners may offer better paste release. IPC-7525 may have alternate design recommendations.
9. Board assembly site may have different recommendations for stencil design.

IMPORTANT NOTICE AND DISCLAIMER

TI PROVIDES TECHNICAL AND RELIABILITY DATA (INCLUDING DATASHEETS), DESIGN RESOURCES (INCLUDING REFERENCE DESIGNS), APPLICATION OR OTHER DESIGN ADVICE, WEB TOOLS, SAFETY INFORMATION, AND OTHER RESOURCES “AS IS” AND WITH ALL FAULTS, AND DISCLAIMS ALL WARRANTIES, EXPRESS AND IMPLIED, INCLUDING WITHOUT LIMITATION ANY IMPLIED WARRANTIES OF MERCHANTABILITY, FITNESS FOR A PARTICULAR PURPOSE OR NON-INFRINGEMENT OF THIRD PARTY INTELLECTUAL PROPERTY RIGHTS.

These resources are intended for skilled developers designing with TI products. You are solely responsible for (1) selecting the appropriate TI products for your application, (2) designing, validating and testing your application, and (3) ensuring your application meets applicable standards, and any other safety, security, regulatory or other requirements.

These resources are subject to change without notice. TI grants you permission to use these resources only for development of an application that uses the TI products described in the resource. Other reproduction and display of these resources is prohibited. No license is granted to any other TI intellectual property right or to any third party intellectual property right. TI disclaims responsibility for, and you fully indemnify TI and its representatives against any claims, damages, costs, losses, and liabilities arising out of your use of these resources.

TI’s products are provided subject to TI’s Terms of Sale, TI’s General Quality Guidelines, or other applicable terms available either on ti.com or provided in conjunction with such TI products. TI’s provision of these resources does not expand or otherwise alter TI’s applicable warranties or warranty disclaimers for TI products. Unless TI explicitly designates a product as custom or customer-specified, TI products are standard, catalog, general purpose devices.

TI objects to and rejects any additional or different terms you may propose.

Copyright © 2026, Texas Instruments Incorporated

Last updated 10/2025