CAT5271, CAT5273

Dual 256-position I²C Compatible Digital Potentiometers (POTs)

The CAT5271 and CAT5273 are dual 256-position digital programmable linear taper potentiometers ideally suited for replacing mechanical potentiometers and variable resistors.

The wiper settings are controlled through an I²C-compatible digital interface. Upon power-up, the wiper assumes a midscale position and may be repositioned anytime after the power is stable. The devices can be programmed to go to a shutdown state during operation.

The CAT5271 and CAT5273 operate from 2.7 V to 5.5 V, while consuming less than 2 μA. This low operating current, combined with a small package footprint, makes them ideal for battery-powered portable applications.

The CAT5271 and CAT5273, designed as pin for pin replacements for the AD5243 and AD5248, are offered in the 10-lead MSOP package and operate over the −40°C to +85°C industrial temperature range.

Features

- Dual 256-position
- End-to-End Resistance: 50 kΩ, 100 kΩ
- I²C Compatible Interface*
- Power-on Preset to Midscale
- Single Supply 2.7 V to 5.5 V
- Low Temperature Coefficient 100 ppm/°C
- Low Power, I_{DD} 2 μA max
- Wide Operating Temperature −40°C to +85°C
- MSOP−10 Package (3 mm × 4.9 mm)
- These Devices are Pb-Free, Halogen Free/BFR Free and are RoHS Compliant

Typical Applications

- Potentiometer Replacement
- Transducer Adjustment of Pressure, Temperature, Position, Chemical, and Optical Sensors
- RF Amplifier Biasing
- Gain Control and Offset Adjustment

*Two address decode pins (CAT5273 only) allowing multiple devices on the same bus

ON Semiconductor®

http://onsemi.com

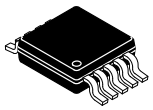

MSOP−10
Z SUFFIX
CASE 846AE

MARKING DIAGRAMS

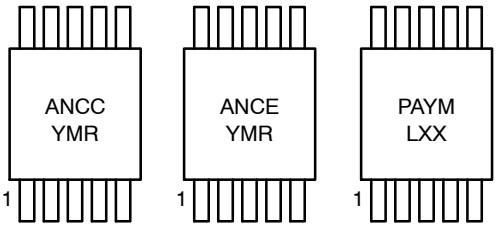

ANCC = CAT5721 − 50 kΩ
ANCE = CAT5721 − 100 kΩ
PA = CAT5273 − 50 kΩ*
Y = Production Year (Last Digit)
M = Production Month (1−9, O, N, D)
R = Revision
L = Assembly Location
XX = Last Two Digits of Assembly Lot Number

*Contact factory for availability of CAT5273 − 100 kΩ

PIN CONNECTIONS

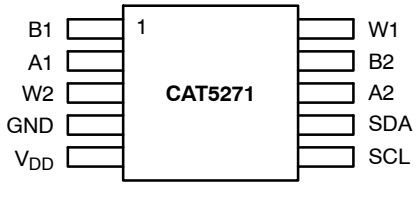

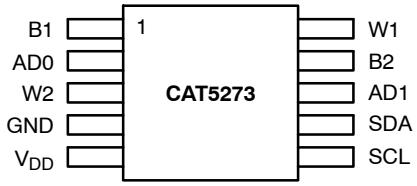

(Top Views)

ORDERING INFORMATION

See detailed ordering and shipping information in the package dimensions section on page 12 of this data sheet.

© Semiconductor Components Industries, LLC, 2013

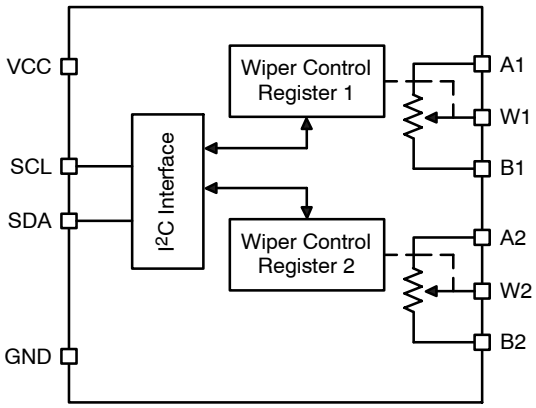

Figure 1. CAT5271 Functional Block Diagram

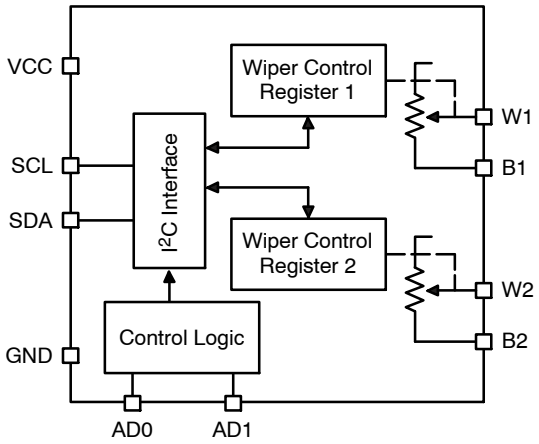

Figure 2. CAT5273 Functional Block Diagram

Table 1. PIN FUNCTION DESCRIPTION

	CAT5271		CAT5273	
Pin No.	**Pin Name**	**Description**	**Pin Name**	**Description**
1	B1	B1 Terminal	B1	B1 Terminal
2	A1	A1 Terminal	AD0	Device Address Bit 0
3	W2	W2 Terminal	W2	W2 Terminal
4	GND	Digital Ground	GND	Digital Ground
5	VDD	Positive Power Supply	VDD	Positive Power Supply
6	SCL	Serial Clock Input	SCL	Serial Clock Input
7	SDA	Serial Data Input / Output	SDA	Serial Data Input / Output
8	A2	A2 Terminal	AD1	Device Address Bit 1
9	B2	B2 Terminal	B2	B2 Terminal
10	W1	W1 Terminal	W1	W1 Terminal

Table 2. ABSOLUTE MAXIMUM RATINGS (Note 1)

Rating	Value	Unit
V_{DD} to GND	−0.3 to 6.5	V
A1, B1, W1, A2, B2, W2 Voltage to GND	V_{DD}	
I_{MAX}	±20	mA
Digital Inputs and Output Voltage to GND	0 to 6.5	V
Operating Temperature Range	−40 to +85	°C
Maximum Junction Temperature (T_{JMAX})	150	°C
Storage Temperature	−65 to +150	°C
Lead Temperature (Soldering, 10 sec)	300	°C

Stresses exceeding Maximum Ratings may damage the device. Maximum Ratings are stress ratings only. Functional operation above the Recommended Operating Conditions is not implied. Extended exposure to stresses above the Recommended Operating Conditions may affect device reliability.

1. Maximum terminal current is bounded by the maximum current handling of the switches, maximum power dissipation of the package, and maximum applied voltage across any two of the A, B, and W terminals at a given resistance.

Table 3. ELECTRICAL CHARACTERISTICS: 50 kΩ and 100 kΩ Versions

V_{DD} = 2.7 V to 5.5 V; $V_A = V_{DD}$; V_B = 0 V; –40°C < T_A < +85°C; unless otherwise noted. (Note 2)

Parameter	Test Conditions	Symbol	Min	Typ (Note 3)	Max	Unit
DC CHARACTERISTICS – RHEOSTAT MODE						
Resistor Differential Nonlinearity (Note 4)	R_{WB}, V_A = no connection (CAT5271)	R–DNL	–1	±0.1	+1	LSB
Resistor Integral Nonlinearity (Note 4)	R_{WB}, V_A = no connection (CAT5271)	R–INL	–2	±0.4	+2	LSB
Nominal Resistor Tolerance (Note 5)	T_A = 25°C	ΔR_{AB}	–20		+20	%
Resistance Temperature Coefficient	$V_{AB} = V_{DD}$, Wiper = no connection	$\Delta R_{AB}/\Delta T$		100		ppm/°C
Wiper Resistance	V_{DD} = 5 V, I_W = ±3 mA	R_W		50	120	Ω
	V_{DD} = 3 V, I_W = ±3 mA			100	250	
DC CHARACTERISTICS – POTENTIOMETER DIVIDER MODE						
Resolution		N			8	Bits
Differential Nonlinearity (Note 6)		DNL	–1	±0.1	+1	LSB
Integral Nonlinearity (Note 6)		INL	–1	±0.4	+1	LSB
Voltage Divider Temperature Coefficient	Code = 0x80	$\Delta V_W/\Delta T$		100		ppm/°C
Full-scale Error	Code = 0xFF	V_{WFSE}	–3	–1	0	LSB
Zero-scale Error	Code = 0x00	V_{WZSE}	0	1	3	LSB
RESISTOR TERMINALS						
Voltage Range (Note 7)		$V_{A,B,W}$	GND		V_{DD}	V
Capacitance (Note 8) A, B	f = 1 MHz, measured to GND, Code = 0 x 80	$C_{A,B}$		45		pF
Capacitance (Note 8) W	f = 1 MHz, measured to GND, Code = 0 x 80	C_W		60		pF
Common-mode Leakage (Note 8)	$V_A = V_B = V_{DD}/2$	I_{CM}		1		nA
DIGITAL INPUTS						
Input Logic High	V_{DD} = 5 V	V_{IH}	0.7 x V_{DD}			V
Input Logic Low	V_{DD} = 5 V	V_{IL}			0.3V_{DD}	V
Input Logic High	V_{DD} = 3 V	V_{IH}	0.7 x V_{DD}			V
Input Logic Low	V_{DD} = 3 V	V_{IL}			0.3V_{DD}	V
Input Current	V_{IN} = 0 V or 5 V	I_{IL}			±1	μA
POWER SUPPLIES						
Power Supply Range		$V_{DD\ RANGE}$	2.7		5.5	V
Supply Current	V_{IH} = 5 V or V_{IL} = 0 V	I_{DD}		0.3	2	μA
Power Dissipation (Note 8)	V_{IH} = 5 V or V_{IL} = 0 V, V_{DD} = 5 V	P_{DISS}			0.2	mW
Power Supply Sensitivity	ΔV_{DD} = +5 V ±10%, Code = Midscale	PSS			±0.05	%/%
DYNAMIC CHARACTERISTICS (Notes 8 and 10)						
Bandwidth –3 dB	R_{AB} = 50 kΩ / 100 kΩ, Code = 0x80	BW		100/40		kHz
Total Harmonic Distortion	V_A =1 V rms, V_B = 0 V, f = 1 kHz, R_{AB} = 10 kΩ	THD_W		0.05		%
V_W Settling Time (50 kΩ/100 kΩ)	V_A = 5 V, V_B = 0 V, ±1 LSB error band	t_S		2		μs

2. V_A applies to both A1 and A2, V_B applies to both B1 and B2.
3. Typical specifications represent average readings at +25°C and V_{DD} = 5 V.
4. Resistor position nonlinearity error R–INL is the deviation from an ideal value measured between the maximum resistance and the minimum resistance wiper positions. R–DNL measures the relative step change from ideal between successive tap positions. Parts are guaranteed monotonic.
5. CAT5271: $V_{AB} = V_{DD}$, Wiper (V_W) = no connect. CAT5273: $V_{WB} = V_{DD}$.
6. INL and DNL are measured at VW with the digital potentiometer configured as a potentiometer divider similar to a voltage output D/A converter. $V_A = V_{DD}$ and V_B = 0 V. DNL specification limits of ±1 LSB maximum are guaranteed monotonic operating conditions.
7. Resistor terminals A, B, W have no limitations on polarity with respect to each other.
8. Guaranteed by design and not subject to production test.
9. Maximum terminal current is bounded by the maximum current handling of the switches, maximum power dissipation of the package, and maximum applied voltage across any two of the A, B, and W terminals at a given resistance.
10. All dynamic characteristics use V_{DD} = 5 V.

Table 4. CAPACITANCE
T_A = 25°C, f = 1.0 MHz, V_{DD} = 5 V

Symbol	Test	Conditions	Max	Units
$C_{I/O}$ (Note 11)	Input/Output Capacitance (SDA, SCL)	$V_{I/O}$ = 0 V	8	pF

Table 5. POWER UP TIMING (Notes 11 and 12)

Symbol	Parameter	Max	Units
t_{PUR}	Power-up to Read Operation	1	ms
t_{PUW}	Power-up to Write Operation	1	ms

11. This parameter is tested initially and after a design or process change that affects the parameter.
12. t_{PUR} and t_{PUW} are delays required from the time V_{CC} is stable until the specified operation can be initiated.

Table 6. DIGITAL POTENTIOMETER TIMING

Symbol	Parameter	Min	Max	Units
t_{WRPO}	Wiper Response Time After Power Supply Stable		50	μs
t_{WR}	Wiper Response Time: SCL falling edge after last bit of wiper position data byte to wiper change		20	μs

Table 7. A.C. CHARACTERISTICS
V_{DD} = +2.7 V to +5.5 V, −40°C to +85°C unless otherwise specified.

Symbol	Parameter	Min	Typ	Max	Units
f_{SCL}	Clock Frequency			400	kHz
t_{HIGH}	Clock High Period	600			ns
t_{LOW}	Clock Low Period	1300			ns
$t_{SU:STA}$	Start Condition Setup Time (for a Repeated Start Condition)	600			ns
$t_{HD:STA}$	Start Condition Hold Time	600			ns
$t_{SU:DAT}$	Data in Setup Time	100			ns
$t_{HD:DAT}$	Data in Hold Time	0			ns
$t_{SU:STO}$	Stop Condition Setup Time	600			ns
t_{BUF}	Time the bus must be free before a new transmission can start	1300			ns
t_R	SDA and SCL Rise Time			300	ns
t_F	SDA and SCL Fall Time			300	ns
t_{DH}	Data Out Hold Time		100		ns
T_I	Noise Suppression Time Constant at SCL, SDA Inputs			50	ns
t_{AA}	SCL Low to SDA Data Out and ACK Out			1	μs

TYPICAL CHARACTERISTICS

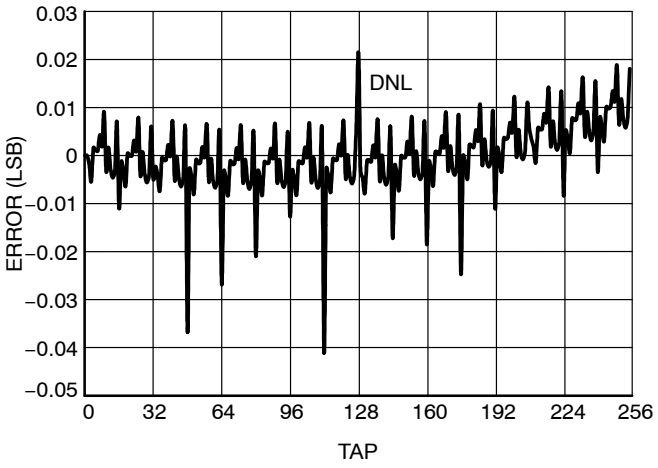

Figure 3. Potentiometer Divider Differential Non-linearity, V_{DD} = 5.6 V

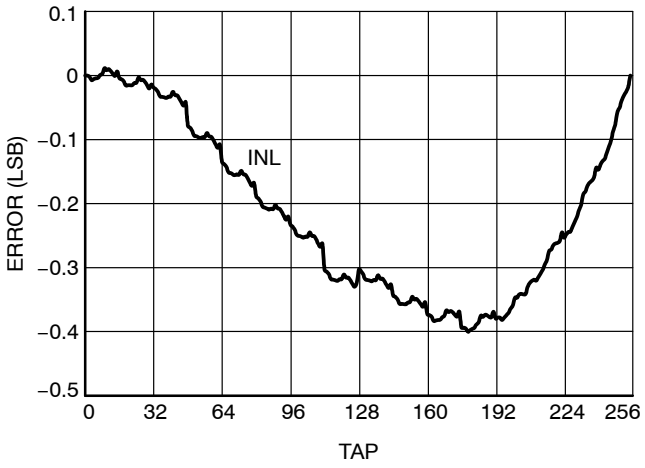

Figure 4. Potentiometer Divider Integral Non-linearity, V_{DD} = 5.6 V

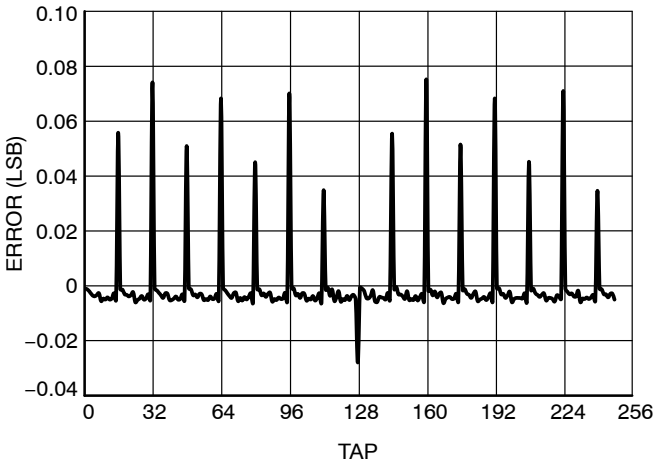

Figure 5. Rheostat Differential Non-linearity, V_{DD} = 5.6 V

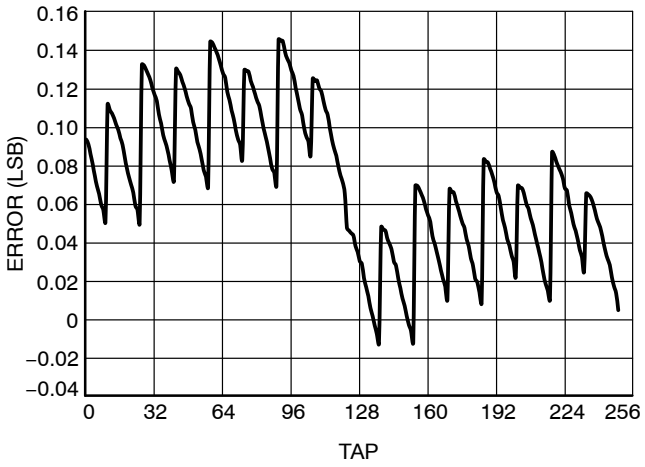

Figure 6. Rheostat Integral Non-linearity, V_{DD} = 5.6 V

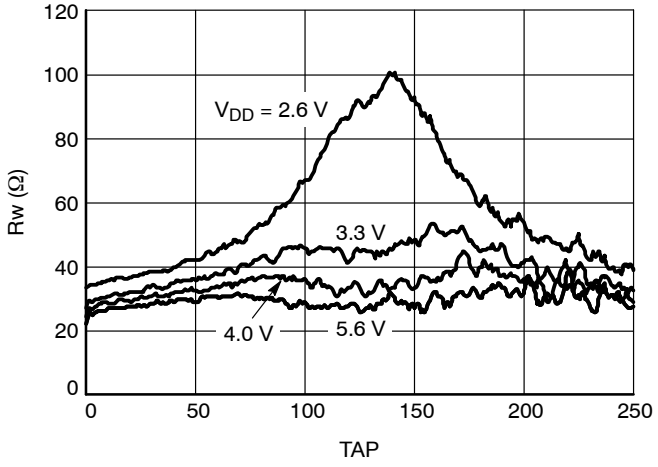

Figure 7. Wiper Resistance at Room Temperature

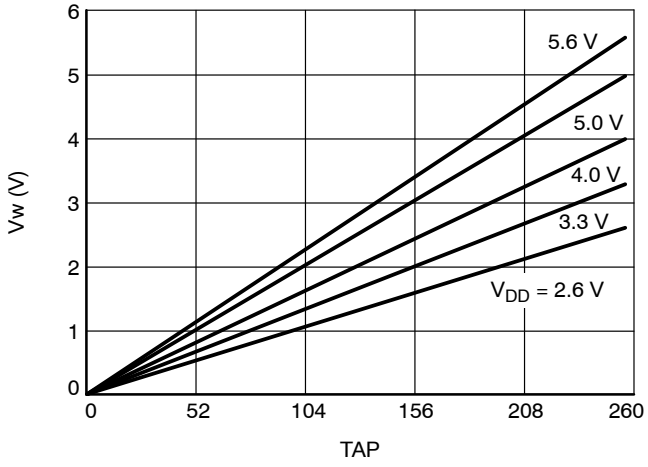

Figure 8. Wiper Voltage

TYPICAL CHARACTERISTICS

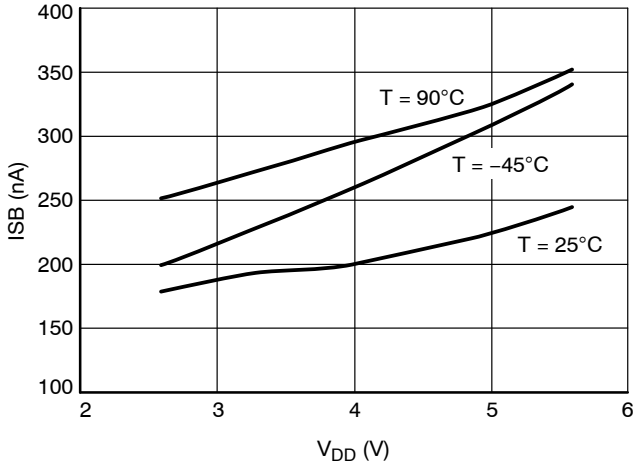

Figure 9. Standby Current

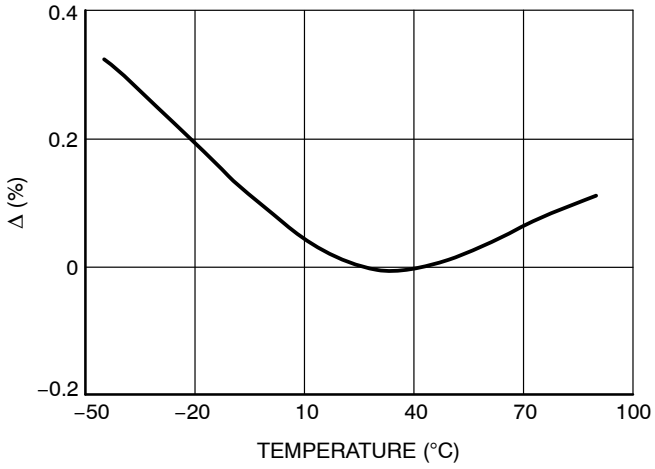

Figure 10. Change in End-to-End Resistance

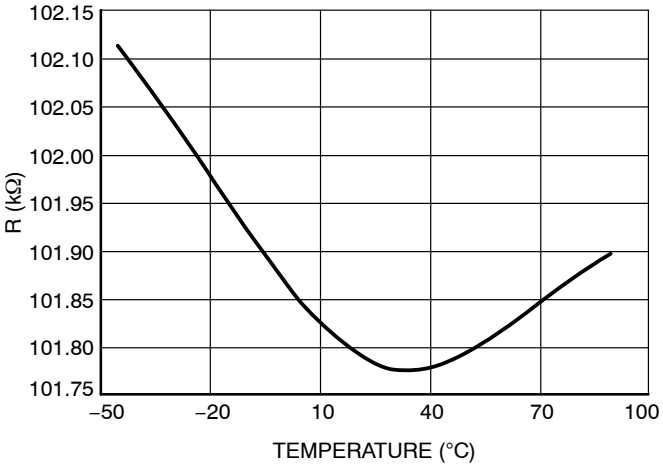

Figure 11. End-to-End Resistance vs. Temperature

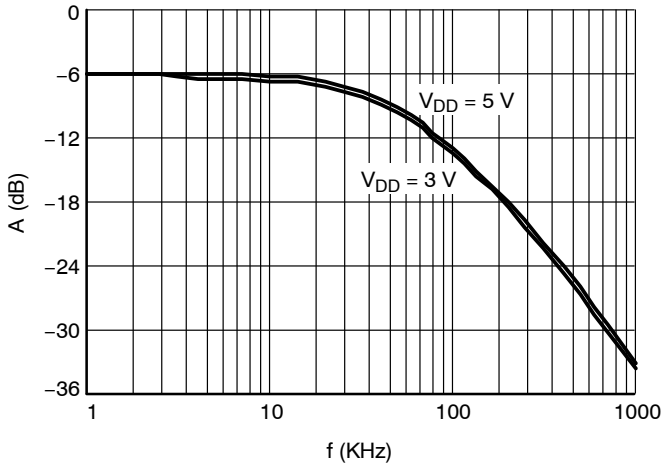

Figure 12. Gain vs. Bandwidth (Tap 0x80)

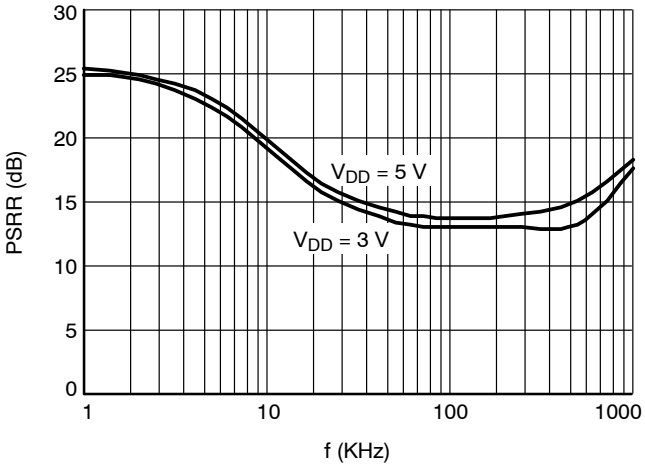

Figure 13. PSRR

BASIC OPERATION

The CAT5271 and CAT5273 are dual 256-position digitally controlled potentiometers. When power is first applied, the wipers assume a mid-scale position. Once the power supply is stable, the wipers may be repositioned via the I^2C compatible interface.

PROGRAMMING: VARIABLE RESISTOR

Rheostat Mode

(The following section refers to CAT5271. The behavior of CAT5273 is identical, but for this device terminal A of the resistor is not accessible.)

The resistance between terminals A and B, R_{AB}, has a nominal value of 50 kΩ or 100 kΩ and has 256 contact points accessed by the wiper terminal, plus the B terminal contact. Data in the 8-bit Wiper register is decoded to select one of these 256 possible settings.

The wiper's first connection is at the B terminal, corresponding to control position 0x00. Ideally this would present a 0 Ω between the Wiper and B, but just as with a mechanical rheostat there is a small amount of contact resistance to be considered, there is a wiper resistance comprised of the R_{ON} of the FET switch connecting the wiper output with its respective contact point. In CAT5271/CAT5273 this 'contact' resistance is typically 50 Ω. Thus a connection setting of 0x00 yields a minimum resistance of 50 Ω between terminals W and B.

For a 100 kΩ device, the second connection, or the first tap point, corresponds to 441 Ω ($R_{WB} = R_{AB}/256 + R_W$ = 390.6 + 50 Ω) for data 0x01. The third connection is the next tap point, is 831 Ω (2 x 390.6 + 50 Ω) for data 0x02, and so on. Figure 14 shows a simplified equivalent circuit where the last resistor string will not be accessed; therefore, there is 1 LSB less of the nominal resistance at full scale in addition to the wiper resistance.

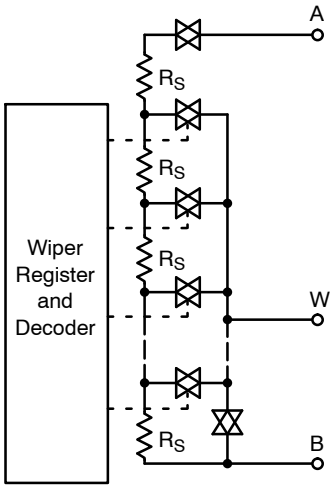

Figure 14. CAT5271 Equivalent Digital POT Circuit

The equation for determining the digitally programmed output resistance between W and B is

$$R_{WB} = \frac{D}{256} R_{AB} + R_W \qquad \text{(eq. 1)}$$

where D is the decimal equivalent of the binary code loaded in the 8-bit Wiper register, R_{AB} is the end-to-end resistance, and R_W is the wiper resistance contributed by the on resistance of the internal switch.

In summary, if R_{AB} = 100 kΩ and the A terminal is open circuited, the following output resistance R_{WB} will be set for the indicated Wiper register codes:

Table 8. CODES AND CORRESPONDING R_{WB} RESISTANCE FOR R_{AB} = 100 kΩ, V_{DD} = 5 V

D (Dec.)	R_{WB} (Ω)	Output State
255	99,559	Full Scale (R_{AB} – 1 LSB + R_W)
128	50,050	Midscale
1	441	1 LSB
0	50	Zero Scale (Wiper Contact Resistance)

Be aware that in the zero-scale position, the wiper resistance of 50 Ω is still present. Current flow between W and B in this condition should be limited to a maximum pulsed current of no more than 20 mA. Failure to heed this restriction can cause degradation or possible destruction of the internal switch contact.

Similar to the mechanical potentiometer, the resistance of the digital POT between the wiper W and terminal A also produces a digitally controlled complementary resistance R_{WA}. When these terminals are used, the B terminal can be opened. Setting the resistance value for R_{WA} starts at a maximum value of resistance and decreases as the data loaded in the latch increases in value. The general equation for this operation is

$$R_{WA}(D) = \frac{256 - D}{256} R_{AB} + R_W \qquad \text{(eq. 2)}$$

For R_{AB} = 100 kΩ and the B terminal open circuited, the following output resistance R_{WA} will be set for the indicated Wiper register codes.

Table 9. CODES AND CORRESPONDING R_{WA} RESISTANCE FOR R_{AB} = 100 kΩ, V_{DD} = 5 V

D (Dec.)	R_{WA} (Ω)	Output State
255	441	Full Scale
128	50,050	Midscale
1	99,659	1 LSB
0	100,050	Zero Scale

Typical device to device resistance matching is lot dependent and may vary by up to ±20%.

ESD Protection

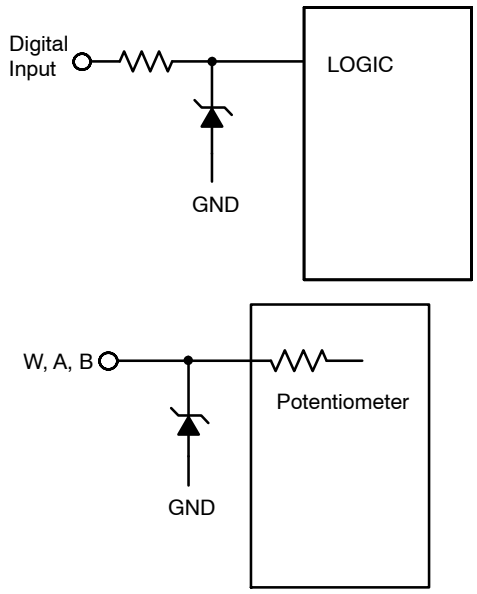

Figure 15. ESD Protection Networks

Terminal Voltage Operating Range

The CAT5271/CAT5273 V_{DD} and GND power supply define the limits for proper 3-terminal digital potentiometer operation. Signals or potentials applied to terminals A, B or the wiper must remain inside the span of V_{DD} and GND. Signals which attempt to go outside these boundaries will be clamped by the internal forward biased diodes.

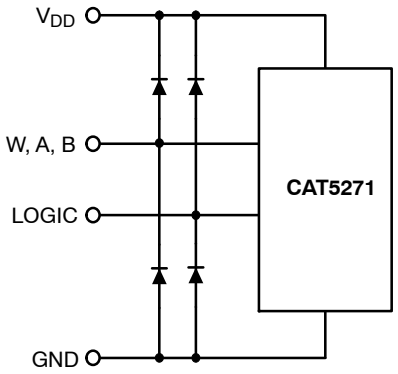

Figure 16.

Power-up Sequence

Because ESD protection diodes limit the voltage compliance at terminals A, B, and W (see Figure 15), it is recommended that V_{DD}/GND be powered before applying any voltage to terminals A, B, and W. The ideal power-up sequence is: GND, V_{DD}, digital inputs, and then $V_{A/B/W}$. The order of powering V_A, V_B, V_W, and the digital inputs is not important as long as they are powered after V_{DD}/GND.

Power Supply Bypassing

Good design practice employs compact, minimum lead length layout design. Leads should be as direct as possible. It is also recommended to bypass the power supplies with quality low ESR Ceramic chip capacitors of 0.01 μF to 0.1 μF. Low ESR 1 μF to 10 μF tantalum or electrolytic capacitors can also be applied at the supplies to suppress transient disturbances and low frequency ripple. As a further precaution digital ground should be joined remotely to the analog ground at one point to minimize the ground bounce.

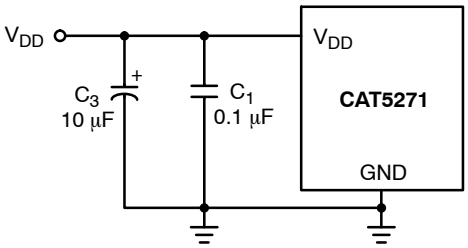

Figure 17. Power Supply Bypassing

I²C BUS PROTOCOL

The following defines the features of the I²C bus protocol:

1. Data transfer may be initiated only when the bus is not busy.
2. During a data transfer, the data line must remain stable whenever the clock line is high. Any changes in the data line while the clock is high will be interpreted as a START or STOP condition.

The device controlling the transfer is a master, typically a processor or controller, and the device being controlled is the slave. The master will always initiate data transfers and provide the clock for both transmit and receive operations. Therefore, CAT5271/CAT5273 will be considered a slave device in all applications.

START Condition

The START condition precedes all commands to the device, and is defined as a high to low transition of SDA when SCL is high. The CAT5271/CAT5273 monitors the SDA and SCL lines and will not respond until this condition is met.

STOP Condition

A low to high transition of SDA when SCL is high determines the STOP condition. All operations must end with a STOP condition.

DEVICE ADDRESSING

The bus Master begins a transmission by sending a START condition. The Master then sends the address of the particular slave device it is requesting. The seven most significant bits of the 8-bit slave address are fixed as 0101111 for the CAT5271. For CAT5273 the first five bits are fixed as 01011, and the next two bits are pin-programmable device address bits (AD1 and AD0). The next bit ($R/\overline{W}$) selects between the type of the instruction Read or Write. If the bit is logic high, then a Read instruction is performed. If the bit is logic low, then the Write command is executed.

After the Master sends a START condition and the slave address byte, the CAT5271/CAT5273 monitors the bus and responds with an acknowledge (on the SDA line) when its address matches the transmitted slave address.

Acknowledge

After a successful data transfer, each receiving device is required to generate an acknowledge. The Acknowledging device pulls down the SDA line during the ninth clock cycle, signaling that it received the 8 bits of data.

The CAT5271/CAT5273 responds with an acknowledge after receiving a START condition and its slave address. If the device has been selected along with a write operation, it responds with an acknowledge after receiving each 8-bit byte.

When the CAT5271/CAT5273 is in a READ mode it transmits 8 bits of data, releases the SDA line, and monitors the line for an acknowledge. Once it receives this acknowledge, the CAT5271/CAT5273 will continue to transmit data. If no acknowledge is sent by the Master, the device terminates data transmission and waits for a STOP condition.

WRITE OPERATION

In the Write mode, the Master device sends the START condition and the slave address information to the Slave device. After the Slave generates an acknowledge, the Master sends the instruction byte. After receiving another acknowledge from the Slave, the Master device transmits the data to be written into the wiper register. The CAT5271/CAT5273 acknowledges once more and the Master generates the STOP condition.

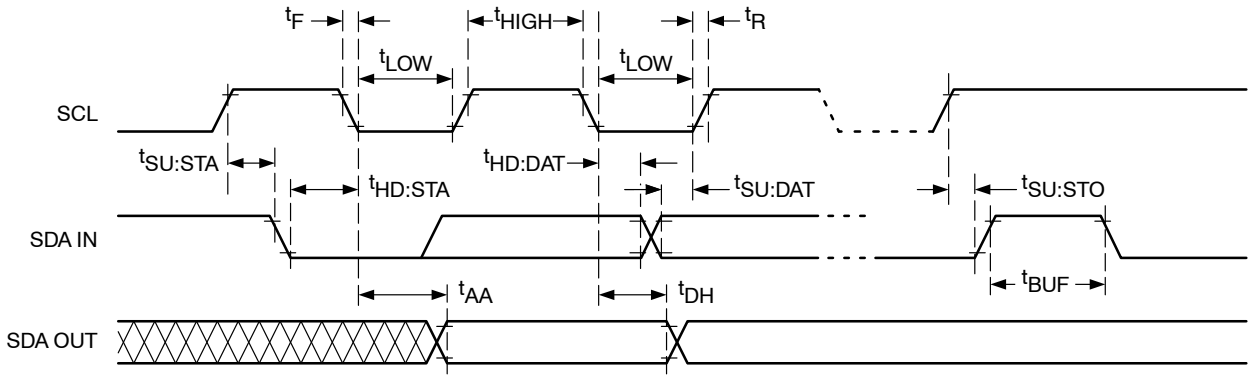

Figure 18. Bus Timing Diagram

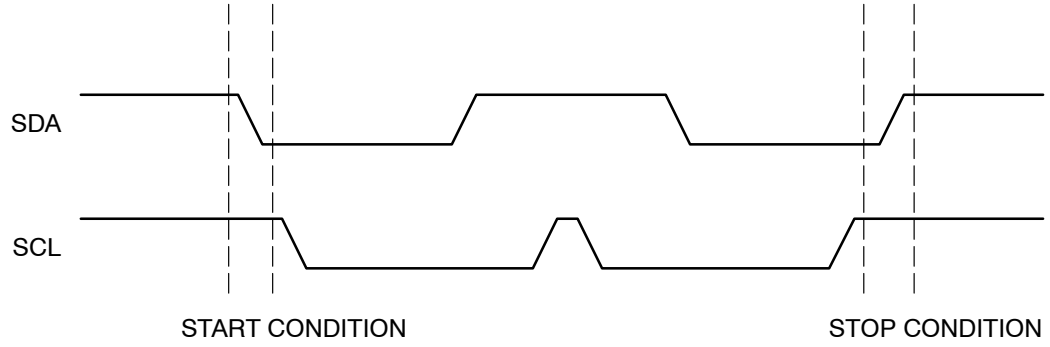

Figure 19. Start/Stop Condition

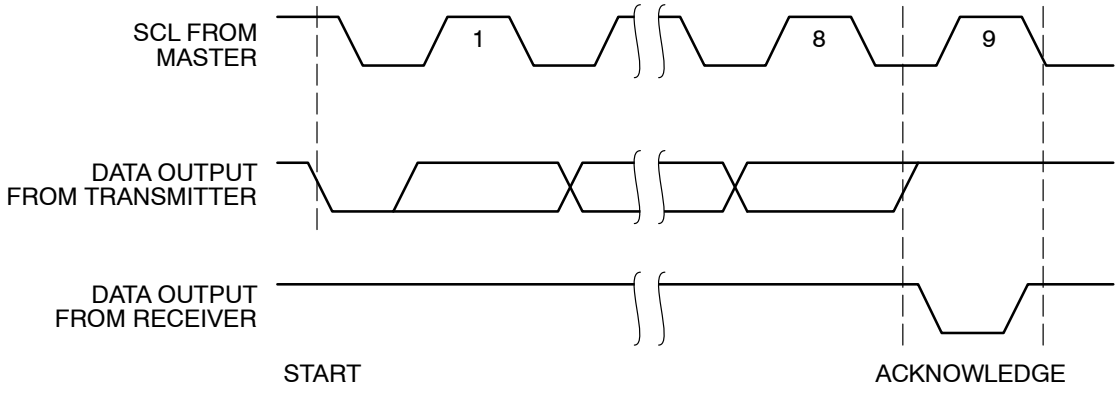

Figure 20. Acknowledge Condition

INSTRUCTION AND REGISTER DESCRIPTION

Slave Address Byte

The first byte sent to the CAT5271 from the master/processor is called the Slave Address Byte. The most significant seven bits of the slave address are a device type identifier. For the CAT5271, these bits are fixed at 0101111. For CAT5273, the first five bits are fixed as 01011, and the next two bits of the device identifier are determined by the logic levels on the AD1 and AD0 pins. The following bit ($R/\overline{W}$) selects between a Read or a Write operation. If the bit is logic high, then a Read instruction is performed. If the bit is low, then the Write command is executed.

Instruction Byte

Write and Read instructions are respectively three and two bytes in length. The basic sequence of the two instructions is illustrated in Table 10 and 11.

Write Operation

In the write instruction, the second byte first bit (A0) selects between the potentiometer 1 and 2: a logic low is for the potentiometer 1, and a logic high is for potentiometer 2.

The following bit (SD) is the shutdown bit. A logic high causes an open circuit at terminal A while shorting the wiper terminal W to terminal B. The “shutdown” operation does not change the contents of the wiper register. When the shutdown bit, SD, goes back to a logic low, the previous wiper position is restored. Also during shutdown, new settings can be programmed. As soon as the device is returned from shutdown, the wiper position is set according to the wiper register value.

The remainder of the bits in the instruction byte are don’t care bits.

Read Operation

In the read mode, the data byte follows immediately after the acknowledgment of the slave address byte. Data is transmitted over the serial bus in sequences.

There is no potentiometer channel selection bit in the Read command. The addressed channel is the one that is previously selected in the write mode. If it desired to read the potentiometer wiper register values of both channels, the first potentiometer must be addressed in write mode and then change to read mode to read the first channel value. After that, the user must return the device to write mode with the second potentiometer selected and read the second potentiometer wiper register value in read mode. It is not necessary for users to issue the third data byte in write mode for subsequent read operation.

Wiper Control

The CAT5271/CAT5273 contains two 8-bit Wiper Control Register (WCR). The Wiper Control Register output is decoded to select one of 256 switches along its resistor array. The contents of the WCR may be written by the host via Write instruction.

The Wiper Control Registers are a volatile register that loses its contents when the CAT5271/CAT5273 is powered-down. Upon power-up, the wiper is set to midscale and may be repositioned anytime after the power has become stable.

Table 10. CAT5271 Write

S	0	1	0	1	1	1	1	$\overline{W}$	A	A0	SD	X	X	X	X	X	X	A	D7	D6	D5	D4	D3	D2	D1	D0	A	P
	Slave Address Byte									Instruction Byte									Data Byte									

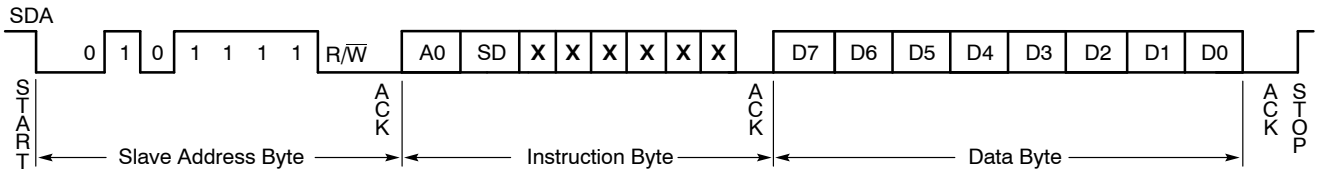

Table 11. CAT5271 READ

S	0	1	0	1	1	1	1	R	A	D7	D6	D5	D4	D3	D2	D1	D0	A	P
	Slave Address Byte									Data Byte									

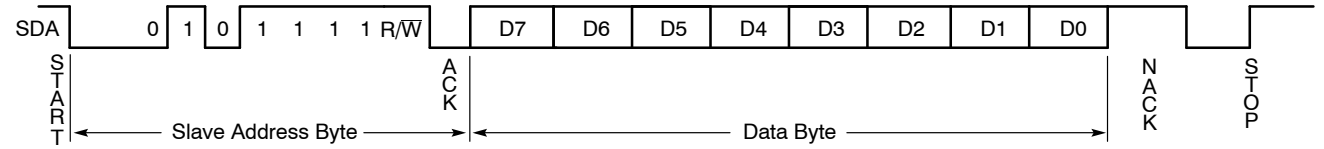

Legend

S =	Start	A0 =	Potentiometer Channel (1 or 2) Select Bit
P =	Stop	SD =	Shut Down:
A =	Acknowledge		0: normal operation
D =	Data bit		1: wiper is parked at B terminal and
R =	Read (bit is 1 for Read instruction)		terminal A is open circuit.
$\overline{W}$ =	Write (bit is 0 for Write instruction)	X =	Don’t Care

Table 12. CAT5273 Write

S	0	1	0	1	1	AD1	AD0	$\overline{W}$	A	A0	SD	X	X	X	X	X	X	A	D7	D6	D5	D4	D3	D2	D1	D0	A	P
	Slave Address Byte									Instruction Byte									Data Byte									

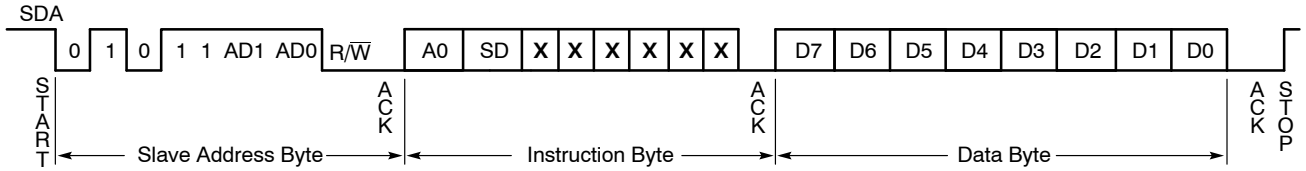

Table 13. CAT5273 READ

S	0	1	0	1	1	AD1	AD0	R	A	D7	D6	D5	D4	D3	D2	D1	D0	A	P
	Slave Address Byte									Data Byte									

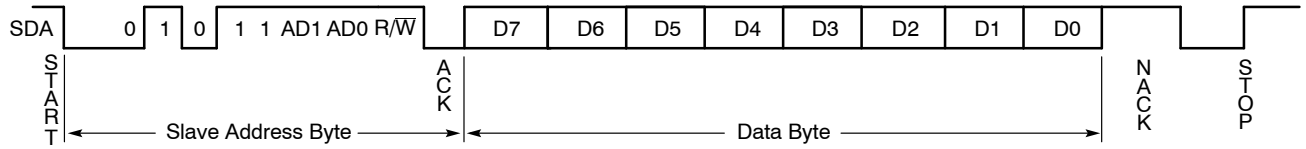

Legend

S =	Start	SD =	Shut Down:
P =	Stop		0: normal operation
A =	Acknowledge		1: wiper is parked at B terminal
D =	Data bit		and terminal A is open circuit.
R =	Read (bit is 1 for Read instruction)	X =	Don't Care
$\overline{W}$ =	Write (bit is 0 for Write instruction)	AD1, AD0 =	Bits that must match the logic levels
A0 =	Potentiometer Channel (1 or 2) Select Bit		on pins AD1 and AD0

Table 14. ORDERING PART NUMBER

Part Number	Resistance	Package	Lead Finish	Shipping†
CAT5271ZI−50−GT3	50 kΩ	MSOP−10	NiPdAu	3000 / Tape & Reel
CAT5271ZI−00−GT3	100 kΩ			3000 / Tape & Reel
CAT5273ZI−50−GT3	50 kΩ	MSOP−10	NiPdAu	3000 / Tape & Reel

†For information on tape and reel specifications, including part orientation and tape sizes, please refer to our Tape and Reel Packaging Specifications Brochure, BRD8011/D.

13. For detailed information and a breakdown of device nomenclature and numbering systems, please see the ON Semiconductor Device Nomenclature document, TND310/D, available at www.onsemi.com.
14. All packages are RoHS-compliant (Lead-free, Halogen-free).

onsemi, , and other names, marks, and brands are registered and/or common law trademarks of Semiconductor Components Industries, LLC dba "**onsemi**" or its affiliates and/or subsidiaries in the United States and/or other countries. **onsemi** owns the rights to a number of patents, trademarks, copyrights, trade secrets, and other intellectual property. A listing of **onsemi**'s product/patent coverage may be accessed at www.onsemi.com/site/pdf/Patent−Marking.pdf. **onsemi** reserves the right to make changes at any time to any products or information herein, without notice. The information herein is provided "as−is" and **onsemi** makes no warranty, representation or guarantee regarding the accuracy of the information, product features, availability, functionality, or suitability of its products for any particular purpose, nor does **onsemi** assume any liability arising out of the application or use of any product or circuit, and specifically disclaims any and all liability, including without limitation special, consequential or incidental damages. Buyer is responsible for its products and applications using **onsemi** products, including compliance with all laws, regulations and safety requirements or standards, regardless of any support or applications information provided by **onsemi**. "Typical" parameters which may be provided in **onsemi** data sheets and/or specifications can and do vary in different applications and actual performance may vary over time. All operating parameters, including "Typicals" must be validated for each customer application by customer's technical experts. **onsemi** does not convey any license under any of its intellectual property rights nor the rights of others. **onsemi** products are not designed, intended, or authorized for use as a critical component in life support systems or any FDA Class 3 medical devices or medical devices with a same or similar classification in a foreign jurisdiction or any devices intended for implantation in the human body. Should Buyer purchase or use **onsemi** products for any such unintended or unauthorized application, Buyer shall indemnify and hold **onsemi** and its officers, employees, subsidiaries, affiliates, and distributors harmless against all claims, costs, damages, and expenses, and reasonable attorney fees arising out of, directly or indirectly, any claim of personal injury or death associated with such unintended or unauthorized use, even if such claim alleges that **onsemi** was negligent regarding the design or manufacture of the part. **onsemi** is an Equal Opportunity/Affirmative Action Employer. This literature is subject to all applicable copyright laws and is not for resale in any manner.

ADDITIONAL INFORMATION

TECHNICAL PUBLICATIONS:
Technical Library: www.onsemi.com/design/resources/technical−documentation
onsemi Website: www.onsemi.com

ONLINE SUPPORT: www.onsemi.com/support
For additional information, please contact your local Sales Representative at www.onsemi.com/support/sales