RoHS/ REACH COMPLIANT

Halogen Free

AEC Q200 +125°C

Shielded Power Inductors – PFL2015

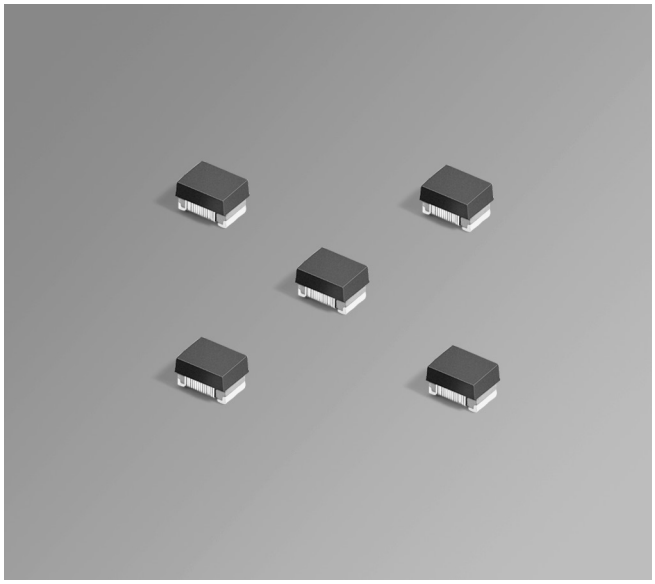

- Low cost, low profile 0805 size power inductor
- Can handle current of much larger inductors; up to 1900 mA
- AEC-Q200 qualified

Core material Composite
Core and winding loss See www.coilcraft.com/coreloss
Environmental RoHS compliant, halogen free
Terminations RoHS compliant matte tin over nickel over silver-platinum-glass frit. Other terminations available at additional cost.
Weight 14.1 mg
Ambient temperature –40°C to +125°C with (40°C rise) Irms current.
Maximum part temperature +140°C (ambient + temp rise). Derating.
Storage temperature Component: –40°C to +140°C.
Tape and reel packaging: –40°C to +80°C
Resistance to soldering heat Max three 40 second reflows at +260°C, parts cooled to room temperature between cycles
Moisture Sensitivity Level (MSL) 1 (unlimited floor life at <30°C / 85% relative humidity)
Packaging 2000/7″ reel; 7500/13″ reel. Plastic tape: 8 mm wide, 0.23 mm thick, 4 mm pocket spacing, 1.63 mm pocket depth
PCB washing Tested to MIL-STD-202 Method 215 plus an additional aqueous wash. See Doc787_PCB_Washing.pdf.

Part number[1]	Inductance[2] ±20% (µH)	DCR (mOhms)[3] typ	DCR (mOhms)[3] max	SRF typ[4] (MHz)	Isat (mA)[5] 10% drop	Isat (mA)[5] 20% drop	Isat (mA)[5] 30% drop	Irms (mA)[6] 20°C rise	Irms (mA)[6] 40°C rise
PFL2015-181ME_	0.18	40	55	750	2300	2700	2900	1700	2300
PFL2015-331ME_	0.33	45	60	650	1500	2000	2100	1600	2200
PFL2015-561ME_	0.56	60	70	600	1300	1600	1900	1300	1800
PFL2015-681ME_	0.68	62	75	460	1200	1600	1800	1100	1500
PFL2015-102ME_	1.0	110	130	450	900	1200	1400	940	1200
PFL2015-152ME_	1.5	160	190	145	700	900	1050	780	1050
PFL2015-222ME_	2.2	175	210	100	640	840	1050	770	1000
PFL2015-332ME_	3.3	255	280	60	480	650	720	700	900
PFL2015-472ME_	4.7	275	340	50	450	620	700	600	770
PFL2015-682ME_	6.8	340	400	40	380	520	600	520	680

1. When ordering, please specify **termination** and **packaging** codes:

PFL2015-682MEC

Termination: **E** = RoHS compliant matte tin over nickel over silver-platinum-glass frit.
Special order, added cost:
Q = RoHS tin-silver-copper (95.5/4/0.5) or **P** = non-RoHS tin-lead (63/37).

Packaging: **C** = 7″ machine-ready reel. EIA-481 embossed plastic tape (2000 parts per full reel). Quantities less than full reel available: in tape (not machine ready) or with leader and trailer ($25 charge).
D = 13″ machine-ready reel. EIA-481 embossed plastic tape. Factory order only, not stocked (7500 parts per full reel).
B = Less than full reel. In an effort to simplify our part numbering system, Coilcraft is eliminating the need for multiple packaging codes. When ordering, simply change the last letter of your part number from B to C.

2. Inductance tested at 7.9 MHz, 0.1 Vrms using a Coilcraft SMD-A test fixture with an Agilent/HP 4286 impedance analyzer and Coilcraft-provided correlation pieces.
3. DCR measured using a micro-ohmmeter.
4. SRF measured using an Agilent/HP 8753D network analyzer and a Coilcraft SMD-D test fixture.
5. DC current at 25°C that causes the specified inductance drop from its value without current. Click for temperature derating information.
6. Current that causes the specified temperature rise from 25°C ambient. This information is for reference only and does not represent absolute maximum ratings. Click for temperature derating information.
7. Electrical specifications at 25°C.

Refer to Doc 362 “Soldering Surface Mount Components” before soldering.

COILCRAFT PRECISION ACCURATE REPEATABLE MEASUREMENTS TEST FIXTURES
SEE WEB SITE

Coilcraft®
www.coilcraft.com

US +1-847-639-6400 sales@coilcraft.com
UK +44-1236-730595 sales@coilcraft-europe.com
Taiwan +886-2-2264 3646 sales@coilcraft.com.tw
China +86-21-6218 8074 sales@coilcraft.com.cn
Singapore + 65-6484 8412 sales@coilcraft.com.sg

Document 876-1 Revised 07/30/26

© Coilcraft Inc. 2026
This product may not be used in medical or high risk applications without prior Coilcraft approval.
Specification subject to change without notice.
Please check web site for latest information.

PFL2015 Series

L vs Current

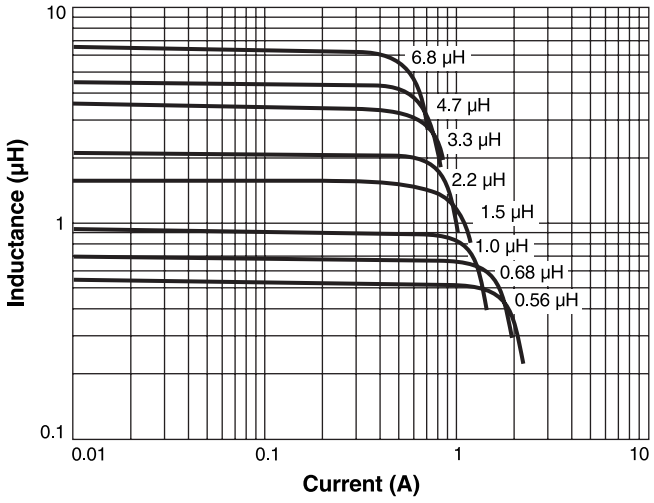

L vs Frequency

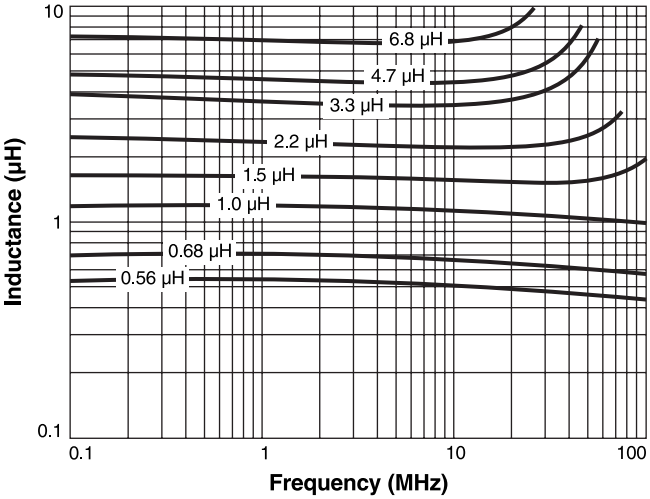

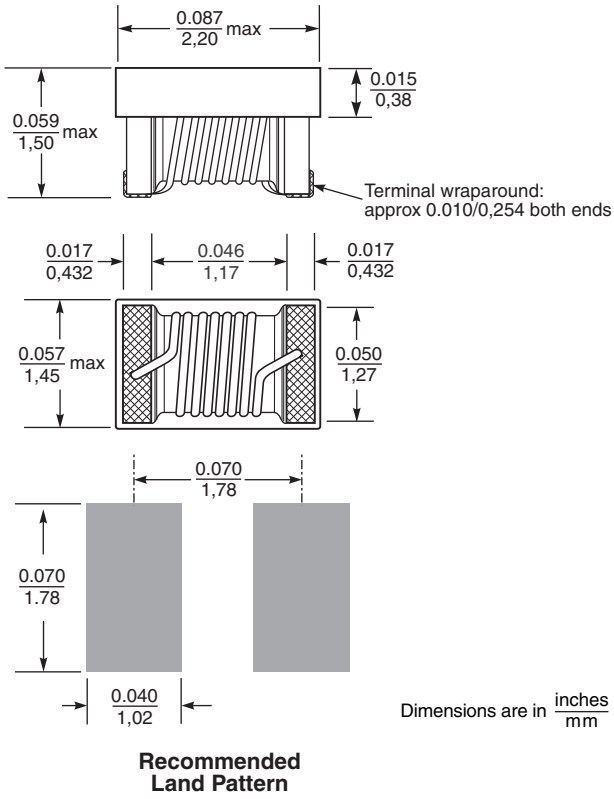

Recommended Land Pattern

Coilcraft®
www.coilcraft.com

US +1-847-639-6400 sales@coilcraft.com
UK +44-1236-730595 sales@coilcraft-europe.com
Taiwan +886-2-2264 3646 sales@coilcraft.com.tw
China +86-21-6218 8074 sales@coilcraft.com.cn
Singapore + 65-6484 8412 sales@coilcraft.com.sg

© Coilcraft Inc. 2026
This product may not be used in medical or high risk applications without prior Coilcraft approval.
Specification subject to change without notice.
Please check web site for latest information.