CIRCUIT SIZE	DIM. "A"	DIM. "B"	DIM. "C"
2	.21 (5.4)	—	.370 (9.40)
4	.38 (9.6)	.17 (4.2)	.535 (13.60)
6	.54 (13.8)	.33 (8.4)	.701 (17.80)
8	.71 (18.0)	.50 (12.6)	.866 (22.00)
10	.87 (22.2)	.66 (16.8)	1.031 (26.20)
12	1.04 (26.4)	.83 (21.0)	1.197 (30.40)
14	1.20 (30.6)	.99 (25.2)	1.362 (34.60)
16	1.37 (34.8)	1.16 (29.4)	1.528 (38.80)
18	1.54 (39.0)	1.32 (33.6)	1.693 (43.00)
20	1.70 (43.2)	1.49 (37.8)	1.858 (47.20)
22	1.87 (47.4)	1.65 (42.0)	2.024 (51.40)
24	2.03 (51.6)	1.82 (46.2)	2.189 (55.60)

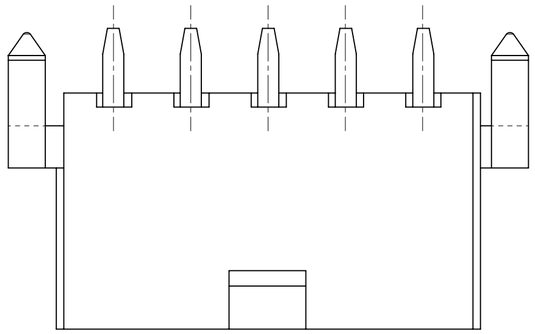

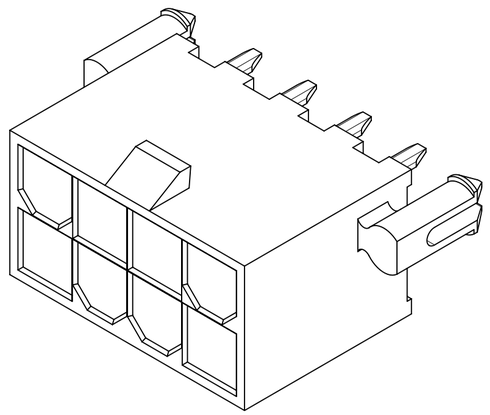

8 CKT SHOWN

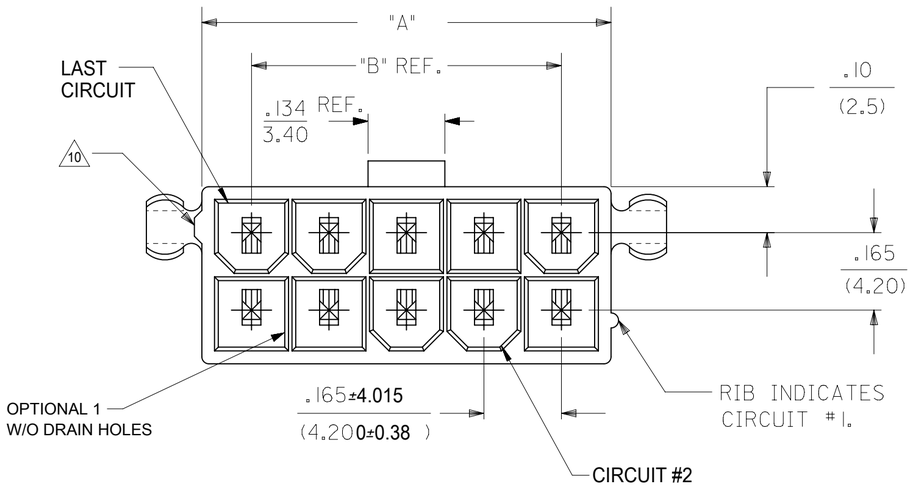

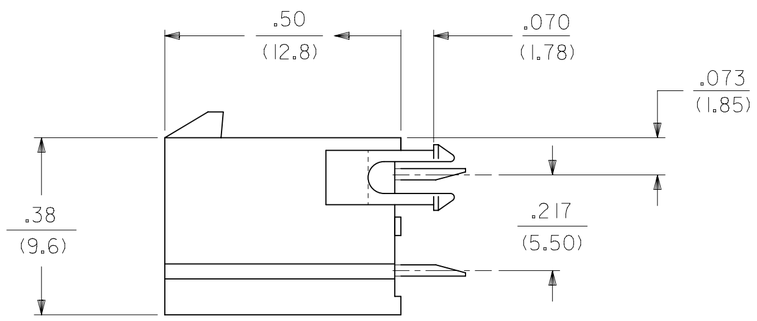

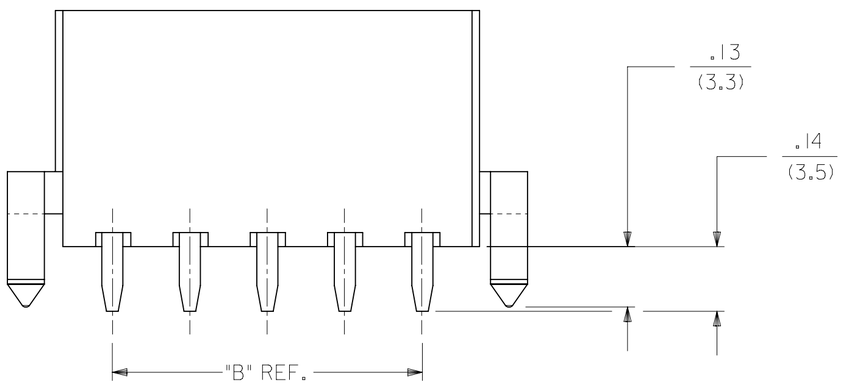

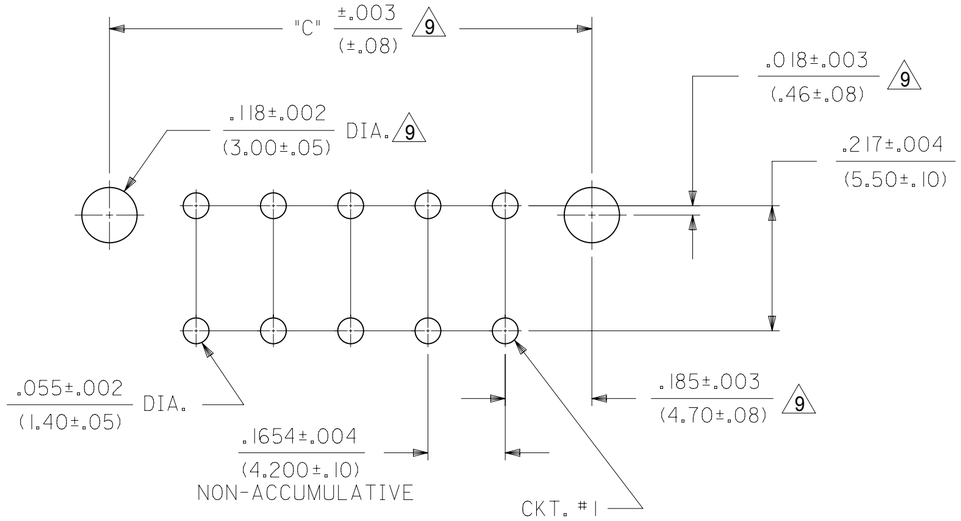

RECOMMENDED HOLE LAYOUT FOR .070/(1.78) MAX. THICK P.C. BOARD

VIEWED FROM COMPONENT SIDE

THIS DRAWING CONTAINS INFORMATION THAT IS PROPRIETARY TO MOLEX ELECTRONIC TECHNOLOGIES, LLC AND SHOULD NOT BE USED WITHOUT WRITTEN PERMISSION

DIMENSION UNITS	SCALE
mm	NTS

GENERAL TOLERANCES (UNLESS SPECIFIED)

	MM	INCH
4 PLACES	±	±
3 PLACES	±	± 0.015
2 PLACES	± 0.38	± 0.02
1 PLACE	± 0.5	±
0 PLACES	±	±
ANGULAR TOL	± 0.5 °	

DRAFT WHERE APPLICABLE MUST REMAIN WITHIN DIMENSIONS

CURRENT REV DESC:

EC NO: 784313
DRWN: JERRYW8 2024/04/25
CHK'D: XQZHANG 2024/09/11
APPR: XQZHANG 2024/09/11

INITIAL REVISION:
DRWN: NNGUYEN 2014/04/22
APPR: FSMITH 2014/05/16

molex

MINI-FIT VERT HDR ASSY
W & W/O PEGS DUAL ROW

PRODUCT CUSTOMER DRAWING

DOCUMENT NUMBER	DOC TYPE	DOC PART	REVISION
SD-172447-0000	PSD	001	A9

THIRD ANGLE PROJECTION	DRAWING	SERIES	MATERIAL NUMBER	CUSTOMER	SHEET NUMBER
	C-SIZE	172447	SEE CHART	GENERAL MARKET	1 OF 3

DOCUMENT STATUS	P1	RELEASE DATE	2024/09/11 06:39:18

FORMAT: Eng-lega-master-tb-prod-C
REVISION: E1
DATE: 2021/05/01

TOOLED	PART NUMBER	CKT SIZE	MOUNTING OPTION	PLATING SEE NOTE 2	COLOR
YES	172447-0002	2	WITH PEGS	TIN	BLACK
YES	172447-0004	4			
YES	172447-0006	6			
YES	172447-0008	8			
YES	172447-0010	10			
YES	172447-0012	12			
NO	172447-0014	14			
NO	172447-0016	16			
NO	172447-0018	18			
NO	172447-0020	20			
NO	172447-0022	22			
NO	172447-0024	24			

TOOLED	PART NUMBER	CKT SIZE	MOUNTING OPTION	PLATING SEE NOTE 2	COLOR
YES	172447-0202	2	WITHOUT PEGS	TIN	BLACK
YES	172447-0204	4			
YES	172447-0206	6			
YES	172447-0208	8			
YES	172447-0210	10			
YES	172447-0212	12			
YES	172447-0214	14			
YES	172447-0216	16			
NO	172447-0218	18			
NO	172447-0220	20			
NO	172447-0222	22			
NO	172447-0224	24			

TOOLED	PART NUMBER	CKT SIZE	MOUNTING OPTION	PLATING SEE NOTE 2	COLOR
YES	172447-1002	2	WITH PEGS	GOLD	BLACK
YES	172447-1004	4			
YES	172447-1006	6			
YES	172447-1008	8			
YES	172447-1010	10			
YES	172447-1012	12			
NO	172447-1014	14			
NO	172447-1016	16			
NO	172447-1018	18			
NO	172447-1020	20			
NO	172447-1022	22			
NO	172447-1024	24			

TOOLED	PART NUMBER	CKT SIZE	MOUNTING OPTION	PLATING SEE NOTE 2	COLOR
YES	172447-1202	2	WITHOUT PEGS	GOLD	BLACK
YES	172447-1204	4			
YES	172447-1206	6			
YES	172447-1208	8			
YES	172447-1210	10			
YES	172447-1212	12			
YES	172447-1214	14			
YES	172447-1216	16			
NO	172447-1218	18			
NO	172447-1220	20			
NO	172447-1222	22			
NO	172447-1224	24			

172447 - * * **

PLATING
SEE NOTE 2
0 = TIN PER "MS"
1 = GOLD PER "GS"

ASSEMBLY TYPE
0 = DUAL ROW W/PEGS (BLACK, V2)
1 = DUAL ROW W/PEGS (BEIGE, V2)
2 = DUAL ROW WITHOUT PEGS (BLACK, V2)
3 = DUAL ROW WITHOUT PEGS (BIEGE, V2)
4 = DUAL ROW W/PEGS (RED, V0)
5 = DUAL ROW W/PEGS (GREEN, V0)
6 = DUAL ROW W/PEGS (BLUE, V0)
7 = DUAL ROW W/PEGS (NATURAL, V0)
8 = DUAL ROW (BLACK, V0)

CIRCUIT SIZE

TOOLED	PART NUMBER	CKT SIZE	MOUNTING OPTION	PLATING SEE NOTE 2	COLOR
YES	172447-0102	2	WITH PEGS	TIN	BEIGE
YES	172447-0104	4			
YES	172447-0106	6			
YES	172447-0108	8			
YES	172447-0110	10			
YES	172447-0112	12			
NO	172447-0114	14			
NO	172447-0116	16			
NO	172447-0118	18			
NO	172447-0120	20			
NO	172447-0122	22			
NO	172447-0124	24			

TOOLED	PART NUMBER	CKT SIZE	MOUNTING OPTION	PLATING SEE NOTE 2	COLOR
YES	172447-0302	2	WITHOUT PEGS	TIN	BIEGE
YES	172447-0304	4			
YES	172447-0306	6			
YES	172447-0308	8			
YES	172447-0310	10			
YES	172447-0312	12			
YES	172447-0314	14			
YES	172447-0316	16			
NO	172447-0318	18			
NO	172447-0320	20			
NO	172447-0322	22			
NO	172447-0324	24			

TOOLED	PART NUMBER	CKT SIZE	MOUNTING OPTION	PLATING SEE NOTE 2	COLOR
YES	172447-1302	2	WITHOUT PEGS	GOLD	BIEGE
YES	172447-1304	4			
YES	172447-1306	6			
YES	172447-1308	8			
YES	172447-1310	10			
YES	172447-1312	12			
YES	172447-1314	14			
YES	172447-1316	16			
NO	172447-1318	18			
NO	172447-1320	20			
NO	172447-1322	22			
NO	172447-1324	24			

TOOLED	PART NUMBER	CKT SIZE	MOUNTING OPTION	PLATING SEE NOTE 2	COLOR
YES	172447-1102	2	WITH PEGS	GOLD	BEIGE
YES	172447-1104	4			
YES	172447-1106	6			
YES	172447-1108	8			
YES	172447-1110	10			
YES	172447-1112	12			
NO	172447-1114	14			
NO	172447-1116	16			
NO	172447-1118	18			
NO	172447-1120	20			
NO	172447-1122	22			
NO	172447-1124	24			

THIS DRAWING CONTAINS INFORMATION THAT IS PROPRIETARY TO MOLEX ELECTRONIC TECHNOLOGIES, LLC AND SHOULD NOT BE USED WITHOUT WRITTEN PERMISSION

DIMENSION UNITS: mm | SCALE: NTS

GENERAL TOLERANCES (UNLESS SPECIFIED)

	MM	INCH
4 PLACES	±	±
3 PLACES	±	± 0.015
2 PLACES	± 0.38	± 0.02
1 PLACE	± 0.5	±
0 PLACES	±	±
ANGULAR TOL	± 0.5 °	

DRAFT WHERE APPLICABLE MUST REMAIN WITHIN DIMENSIONS

CURRENT REV DESC:

EC NO: 784313
DRWN: JERRYW8 2024/04/25
CHK'D: XQZHANG 2024/09/11
APPR: XQZHANG 2024/09/11

INITIAL REVISION:
DRWN: NNGUYEN 2014/04/22
APPR: FSMITH 2014/05/16

molex

MINI-FIT VERT HDR ASSY
W & W/O PEGS DUAL ROW

PRODUCT CUSTOMER DRAWING

DOCUMENT NUMBER	DOC TYPE	DOC PART	REVISION
SD-172447-0000	PSD	001	A9

THIRD ANGLE PROJECTION	DRAWING	SERIES	MATERIAL NUMBER	CUSTOMER	SHEET NUMBER
	C-SIZE	172447	SEE CHART	GENERAL MARKET	2 OF 3

DOCUMENT STATUS	P1	RELEASE DATE	2024/09/11 06:39:18

FORMAT: Eng-lega-master-lib-prod-C
REVISION: E1
DATE: 2021/05/01

		PLATING:	TIN	PLATING:	TIN	PLATING:	TIN	PLATING:	TIN	PLATING:	TIN
		MTG. OPTION:	WITH PEGS	MTG. OPTION:	WITH PEGS	MTG. OPTION:	WITH PEGS	MTG. OPTION:	WITH PEGS	MTG. OPTION:	WITH PEGS
TOOLED	CKTS	PART NO.	MATERIAL	PART NO.	MATERIAL	PART NO.	MATERIAL	PART NO.	MATERIAL	PART NO.	MATERIAL
YES	2	1724470402		1724470502		1724470602		1724470702		1724470802	
YES	4	1724470404		1724470504		1724470604		1724470704		1724470804	
YES	6	1724470406	94V-0, GLOW WIRE, RED	1724470506	94V-0, GLOW WIRE, GREEN	1724470606	94V-0, GLOW WIRE, BLUE	1724470706	94V-0, GLOW WIRE, NATURAL	1724470806	94V-0, GLOW WIRE, BLACK
YES	8	1724470408		1724470508		1724470608		1724470708		1724470808	
YES	10	1724470410		1724470510		1724470610		1724470710		1724470810	
YES	12	1724470412		1724470512		1724470612		1724470712		1724470812	

		PLATING:	TIN	PLATING:	TIN	PLATING:	TIN	PLATING:	TIN	PLATING:	TIN
		MTG. OPTION:	WITHOUT PEGS	MTG. OPTION:	WITHOUT PEGS	MTG. OPTION:	WITHOUT PEGS	MTG. OPTION:	WITHOUT PEGS	MTG. OPTION:	WITHOUT PEGS
TOOLED	CKTS	PART NO.	MATERIAL	PART NO.	MATERIAL	PART NO.	MATERIAL	PART NO.	MATERIAL	PART NO.	MATERIAL
YES	2	1724479402		1724479502		1724479602		1724479702		1724479802	
YES	4	1724479404		1724479504		1724479604		1724479704		1724479804	
YES	6	1724479406	94V-0, GLOW WIRE, RED	1724479506	94V-0, GLOW WIRE, GREEN	1724479606	94V-0, GLOW WIRE, BLUE	1724479706	94V-0, GLOW WIRE, NATURAL	1724479806	94V-0, GLOW WIRE, BLACK
YES	8	1724479408		1724479508		1724479608		1724479708		1724479808	
YES	10	1724479410		1724479510		1724479610		1724479710		1724479810	
YES	12	1724479412		1724479512		1724479612		1724479712		1724479812	

NOTES:
1. MATERIALS:
   HOUSING:
   225S = NYLON 6, UL94V-2, GLOW WIRE, COLOR: BLACK
   225NS = NYLON 6/6, UL94V-2, GLOW WIRE, COLOR: BIEGE
   250RS = NYLON 6/6, UL94V-0, GLOW WIRE, COLOR: RED
   250GS = NYLON 6/6, UL94V-0, GLOW WIRE, COLOR: GREEN
   250BS = NYLON 6/6, UL94V-0, GLOW WIRE, COLOR: BLUE
   250WS = NYLON 6/6, UL94V-0, GLOW WIRE, COLOR: NATURAL
   SC21 = NYLON 6/6, UL94V-0, GLOW WIRE, COLOR: BLACK
   TERMINALS:
   BRASS
2. TERMINAL PLATING:
   GOLD =.000030/(0.00076) MIN. SELECT GOLD AND
   .000100/(0.00254) MIN. SELECT MATTE TIN OVER
   .000050/(0.00127) MIN. NICKEL OVERALL
   TIN =.000100/(0.00254) MIN. MATTE TIN OVER
   .000050/(0.00127) MIN. NICKEL
3. PRODUCT SPECIFICATION: PS-5556-001
4. PACKAGING: TRAY PACKED PER PK-5566-001
5. PART MATES WITH MINI-FIT JR. RECEPTACLE NO. 46992.
6. PART CONFORMS TO CLASS "B" REQUIREMENTS OF COSMETIC SPECIFICATION PS-45499-002 WITH THE EXCEPTION OF DISCOLORATION, FLASH AND SINK ON THE HOUSING MEET CLASS "C: REQUIREMENTS.
7. PART IS NOT DESIGNED FOR CURRENT SHARING.
8. PARTS ARE NOT DESIGNED TO BE MATED OR UN-MATED WHILE CIRCUITS ARE LIVE.
9 LOCATION OF .118.002/(3.000.05) DIAMETER HOLES ON P.C. BOARD IS FOR OPTIONAL PEGS.
10 ANTI-SHINGLING RIB MAY OR MAY NOT APPEAR ON HOUSINGS.
11. APPLICATION SPECIFICATION : 469920000-AS

172447 - * * **

PLATING
SEE NOTE 2
0 = TIN PER "MS"
1 = GOLD PER "GS"

ASSEMBLY TYPE
0 = DUAL ROW W/PEGS (BLACK, V2)
1 = DUAL ROW W/PEGS (BEIGE, V2)
2 = DUAL ROW WITHOUT PEGS (BLACK, V2)
3 = DUAL ROW WITHOUT PEGS (BIEGE, V2)
4 = DUAL ROW W/PEGS (RED, V0)
5 = DUAL ROW W/PEGS (GREEN, V0)
6 = DUAL ROW W/PEGS (BLUE, V0)
7 = DUAL ROW W/PEGS (NATURAL, V0)
8 = DUAL ROW (BLACK, V0)

CIRCUIT SIZE

THIS DRAWING CONTAINS INFORMATION THAT IS PROPRIETARY TO MOLEX ELECTRONIC TECHNOLOGIES, LLC AND SHOULD NOT BE USED WITHOUT WRITTEN PERMISSION

DIMENSION UNITS	SCALE
mm	NTS

GENERAL TOLERANCES (UNLESS SPECIFIED)

	MM	INCH
4 PLACES	±	±
3 PLACES	±	± 0.015
2 PLACES	± 0.38	± 0.02
1 PLACE	± 0.5	±
0 PLACES	±	±
ANGULAR TOL	± 0.5 °	

DRAFT WHERE APPLICABLE MUST REMAIN WITHIN DIMENSIONS

CURRENT REV DESC:

EC NO: 784313
DRWN: JERRYW8 2024/04/25
CHK'D: XQZHANG 2024/09/11
APPR: XQZHANG 2024/09/11

INITIAL REVISION:
DRWN: NNGUYEN 2014/04/22
APPR: FSMITH 2014/05/16

molex

MINI-FIT VERT HDR ASSY
W & W/O PEGS DUAL ROW

PRODUCT CUSTOMER DRAWING

DOCUMENT NUMBER	DOC TYPE	DOC PART	REVISION
SD-172447-0000	PSD	001	A9

THIRD ANGLE PROJECTION	DRAWING	SERIES	MATERIAL NUMBER	CUSTOMER	SHEET NUMBER
	C-SIZE	172447		GENERAL MARKET	3 OF 3

DOCUMENT STATUS	P1	RELEASE DATE	2024/09/11 06:39:18

FORMAT: Eng-lega-master-lb-prod-C
REVISION: E1
DATE: 2021/05/01