MATERIALS AND FINISHES:

BODY: BRASS
PLATED GOLD 10µ" MIN

CENTER CONTACT: BERYLLIUM COPPER
PLATED GOLD GOLD 10µ" MIN

INSULATOR: TEFLON

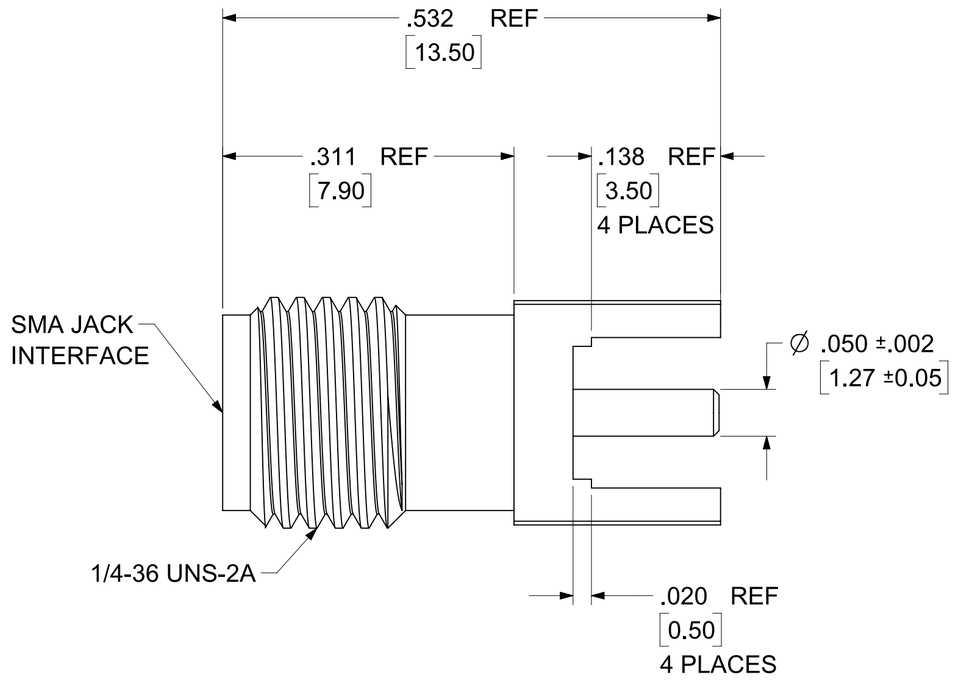

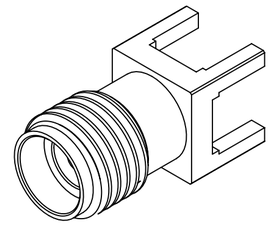

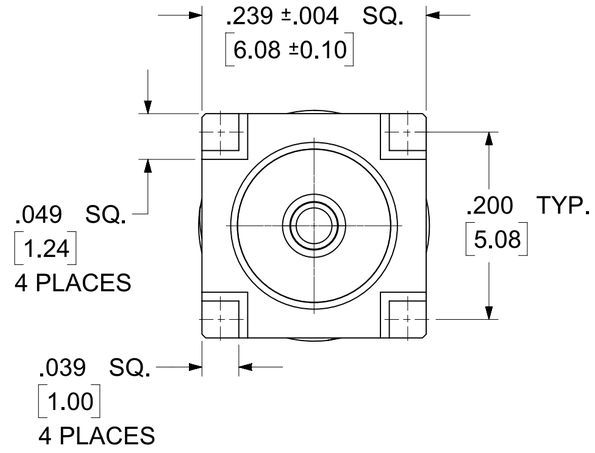

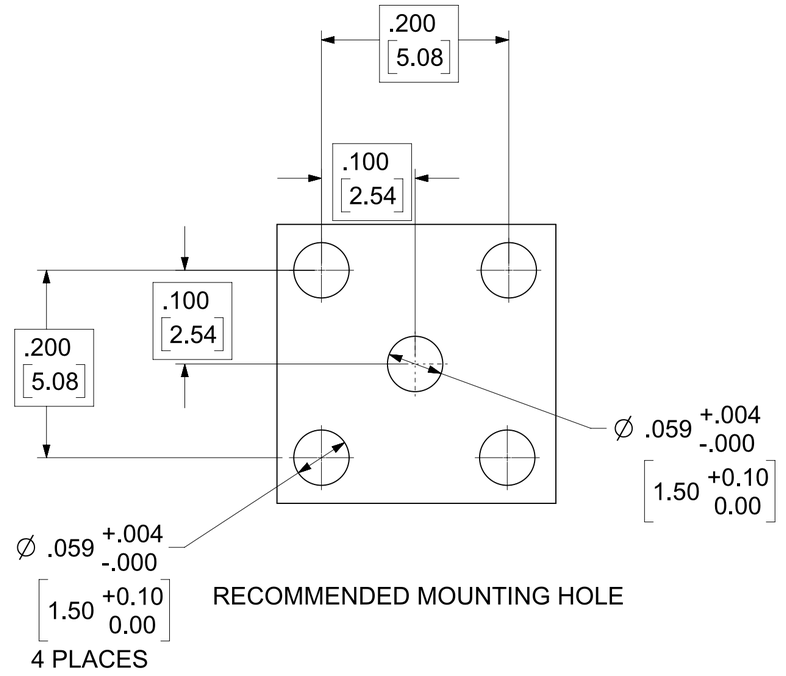

RECOMMENDED MOUNTING HOLE

73391-0072	SMALL TRAY (20 CAV.)	SEE SHEET 4	400
73391-0071	ONE PIECE PER BAG	SEE SHEET 3	500
73391-0070	TRAY (80 CAV.)	SEE SHEET 2	3200
PART NO.	PACKAGING	PACKING SPEC	DU

PS-89675-346	ELECTRO/MECH. PERFORM.
SPECIFICATION	DESCRIPTION

THIS DRAWING CONTAINS INFORMATION THAT IS PROPRIETARY TO MOLEX ELECTRONIC TECHNOLOGIES, LLC AND SHOULD NOT BE USED WITHOUT WRITTEN PERMISSION

FUNCTIONAL SYMBOLS
FA = 0
FC = 0
FP = 0

DIVISIONAL SYMBOLS

DIMENSION UNITS: INCH
SCALE: NTS

GENERAL TOLERANCES (UNLESS SPECIFIED)
ANGULAR TOL ± 2°
4 PLACES ±
3 PLACES ±
2 PLACES ±
1 PLACE ±
0 PLACES ±

DRAFT WHERE APPLICABLE MUST REMAIN WITHIN DIMENSIONS

CURRENT REV DESC: ADD PLATING NOTE PER EWR15870-C

STATUS: Production
DRWN: Cela Wei 2026-04-08
CHK'D: Joanne Liao 2026-04-14
APPR: Ricky Yeh 2026-04-14

THIRD ANGLE PROJECTION
DRAWING: C-SIZE
SERIES: 73391

molex

SMA JACK VERTICAL PCB
50 OHMS SMA-J/PCB

PRODUCT CUSTOMER DRAWING

DOCUMENT NUMBER	DOC TYPE	DOC PART	REVISION
SD-73391-007	PSD	001	B7

MATERIAL NUMBER	CUSTOMER	SHEET NUMBER
SEE TABLE	GENERAL MARKET	1 OF 4

FORMAT: TC-B-prod-C
REVISION: B
DATE: 2022/08/01

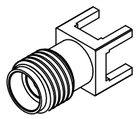

PRODUCT
PN-73391-0070

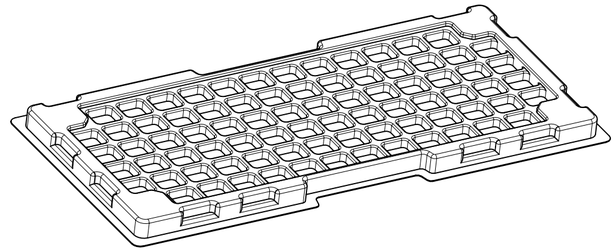

80 SETS PER TRAY
P/N: 89707-0190

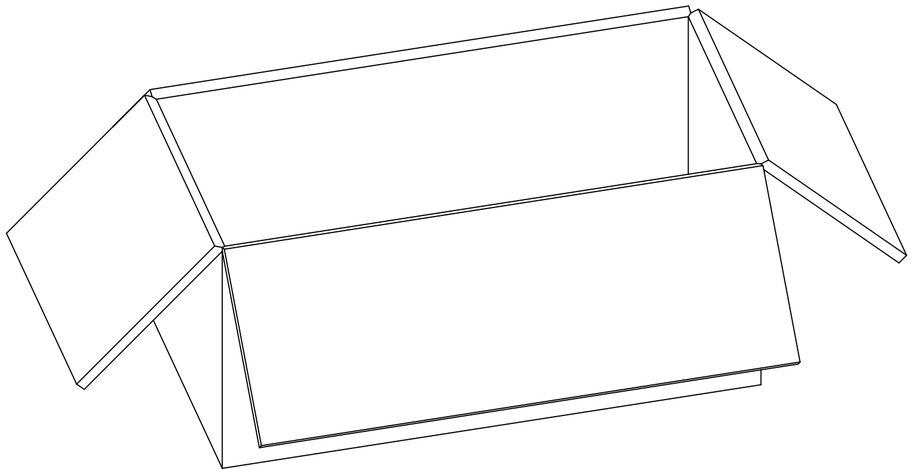

1600 SETS PER INNER
CARTON BOX
P/N: 96707-0001

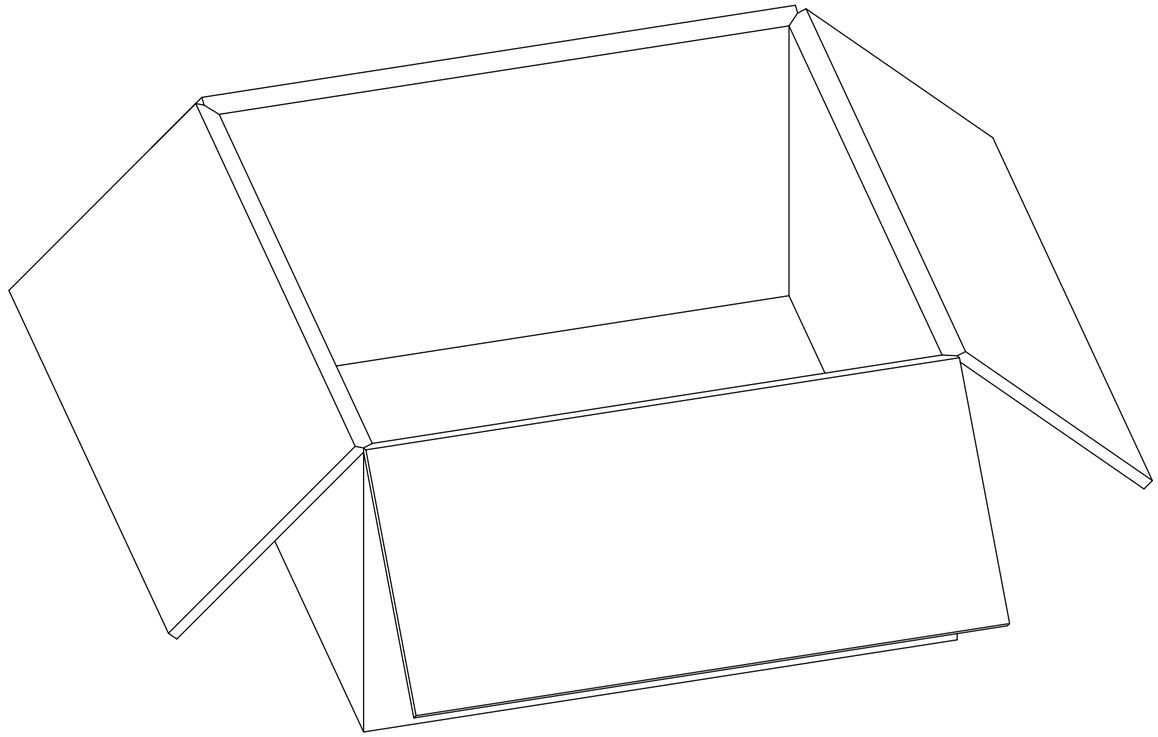

3200 SETS PER OUTER
CARTON BOX
P/N: 96708-0005

FUNCTIONAL SYMBOLS	THIS DRAWING CONTAINS INFORMATION THAT IS PROPRIETARY TO MOLEX ELECTRONIC TECHNOLOGIES, LLC AND SHOULD NOT BE USED WITHOUT WRITTEN PERMISSION										
FA = 0	DIMENSION UNITS: INCH	SCALE: NTS	CURRENT REV DESC: ADD PLATING NOTE PER EWR15870-C								
FC = 0	GENERAL TOLERANCES (UNLESS SPECIFIED)										
FP = 0	ANGULAR TOL ± 2°										
DIVISIONAL SYMBOLS	4 PLACES ±										
	3 PLACES ±										
	2 PLACES ±										
	1 PLACE ±										
	0 PLACES ±										
	DRAFT WHERE APPLICABLE MUST REMAIN WITHIN DIMENSIONS		STATUS: Production								
			DRWN: Cela Wei	2026-04-08							
			CHK'D: Joanne Liao	2026-04-14							
			APPR: Ricky Yeh	2026-04-14							
	THIRD ANGLE PROJECTION	DRAWING: C-SIZE	SERIES: 73391								

molex

SMA JACK VERTICAL PCB
50 OHMS SMA-J/PCB

PRODUCT CUSTOMER DRAWING

DOCUMENT NUMBER	DOC TYPE	DOC PART	REVISION
SD-73391-007	PSD	001	B7

MATERIAL NUMBER	CUSTOMER	SHEET NUMBER
------	GENERAL MARKET	2 OF 4

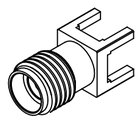

PRODUCT
PN-73391-0071

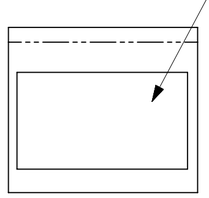

LABEL WITH EACH BAG:

PART NUMBER: 73391-0070
ORDER NUMBER: 73391-0071
MOLEX
DATE: YYWW

ONE SET PER ZIPPER POLY BAG
P/N: 89707-0317

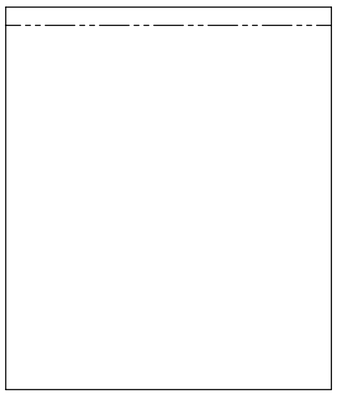

50 SETS PER POLY BAG
P/N: 89707-0174

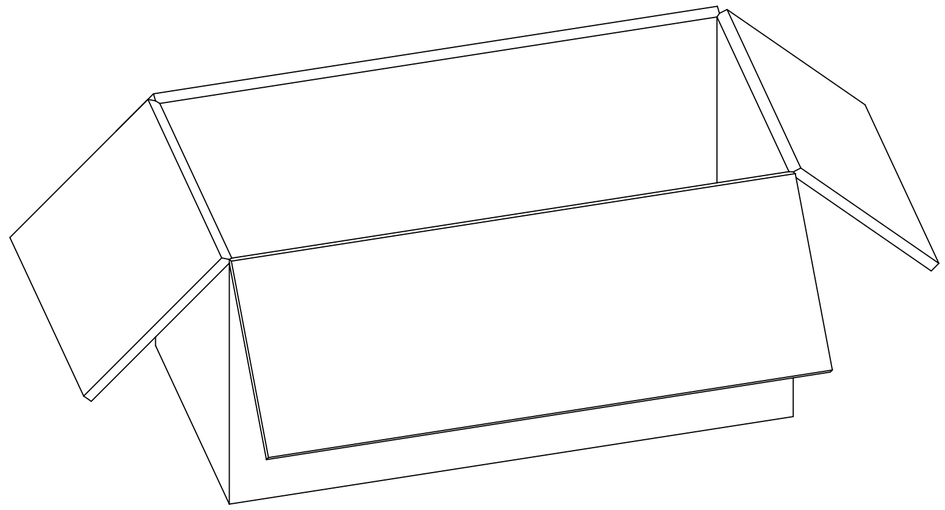

500 SETS PER CARTON BOX
P/N: 96707-0002

THIS DRAWING CONTAINS INFORMATION THAT IS PROPRIETARY TO MOLEX ELECTRONIC TECHNOLOGIES, LLC AND SHOULD NOT BE USED WITHOUT WRITTEN PERMISSION

FUNCTIONAL SYMBOLS	DIMENSION UNITS: INCH	SCALE: NTS	CURRENT REV DESC: ADD PLATING NOTE PER EWR15870-C
FA = 0	GENERAL TOLERANCES (UNLESS SPECIFIED)		
FC = 0	ANGULAR TOL ± 2°		
FP = 0	4 PLACES ±		
DIVISIONAL SYMBOLS	3 PLACES ±		
	2 PLACES ±		
	1 PLACE ±		
	0 PLACES ±		
	DRAFT WHERE APPLICABLE MUST REMAIN WITHIN DIMENSIONS		

STATUS: Production
DRWN: Cela Wei 2026-04-08
CHK'D: Joanne Liao 2026-04-14
APPR: Ricky Yeh 2026-04-14

THIRD ANGLE PROJECTION | DRAWING: C-SIZE | SERIES: 73391

molex

SMA JACK VERTICAL PCB
50 OHMS SMA-J/PCB

PRODUCT CUSTOMER DRAWING

DOCUMENT NUMBER	DOC TYPE	DOC PART	REVISION
SD-73391-007	PSD	001	B7

MATERIAL NUMBER	CUSTOMER	SHEET NUMBER
SEE TABLE	GENERAL MARKET	3 OF 4

FORMAT: TC-tb-prod-C
REVISION: B
DATE: 2022/08/01

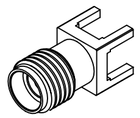

PRODUCT
PN-73391-0072

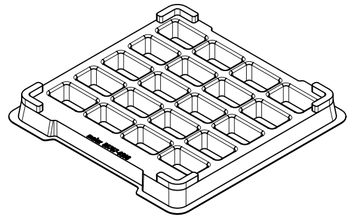

20 SETS PER TRAY
P/N: 89707-0308

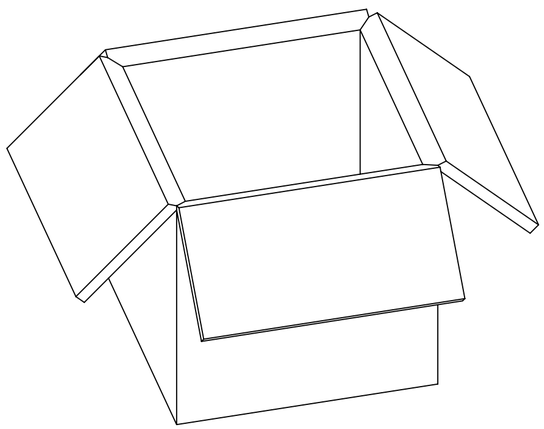

200 SETS PER INNER
CARTON BOX
P/N: 96707-0005

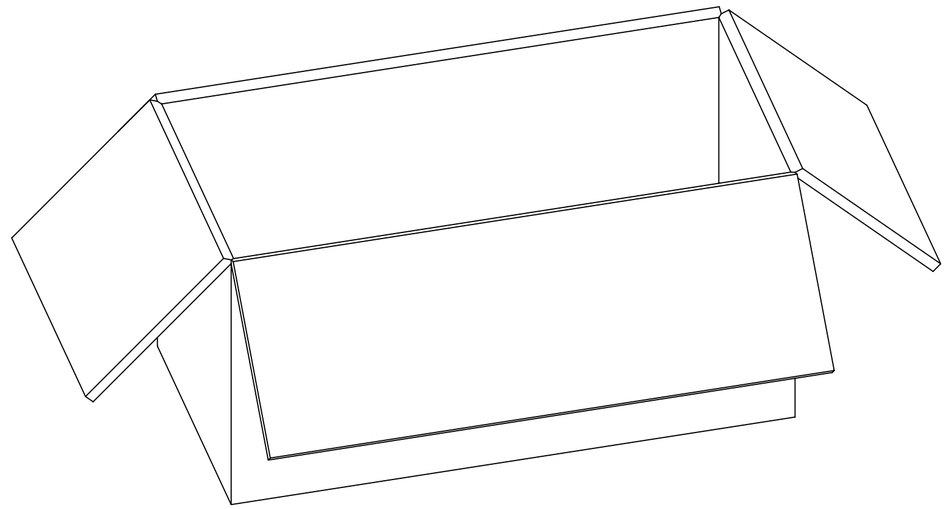

400 SETS PER OUTER
CARTON BOX
P/N: 96707-0002

FUNCTIONAL SYMBOLS	THIS DRAWING CONTAINS INFORMATION THAT IS PROPRIETARY TO MOLEX ELECTRONIC TECHNOLOGIES, LLC AND SHOULD NOT BE USED WITHOUT WRITTEN PERMISSION			
F_A = 0	DIMENSION UNITS: INCH	SCALE: NTS	CURRENT REV DESC: ADD PLATING NOTE PER EWR15870-C	molex
F_C = 0	GENERAL TOLERANCES (UNLESS SPECIFIED)			SMA JACK VERTICAL PCB 50 OHMS SMA-J/PCB
F_P = 0	ANGULAR TOL ± 2°			
DIVISIONAL SYMBOLS	4 PLACES ±			PRODUCT CUSTOMER DRAWING
	3 PLACES ±		STATUS: Production	
	2 PLACES ±		DRWN: Cela Wei 2026-04-08	DOCUMENT NUMBER: SD-73391-007 / DOC TYPE: PSD / DOC PART: 001 / REVISION: B7
	1 PLACE ±		CHK'D: Joanne Liao 2026-04-14	
	0 PLACES ±		APPR: Ricky Yeh 2026-04-14	
	DRAFT WHERE APPLICABLE MUST REMAIN WITHIN DIMENSIONS	THIRD ANGLE PROJECTION	DRAWING: C-SIZE / SERIES: 73391	MATERIAL NUMBER: SEE TABLE / CUSTOMER: GENERAL MARKET / SHEET NUMBER: 4 OF 4

FORMAT: TC-tb-prod-C
REVISION: B
DATE: 2022/08/01