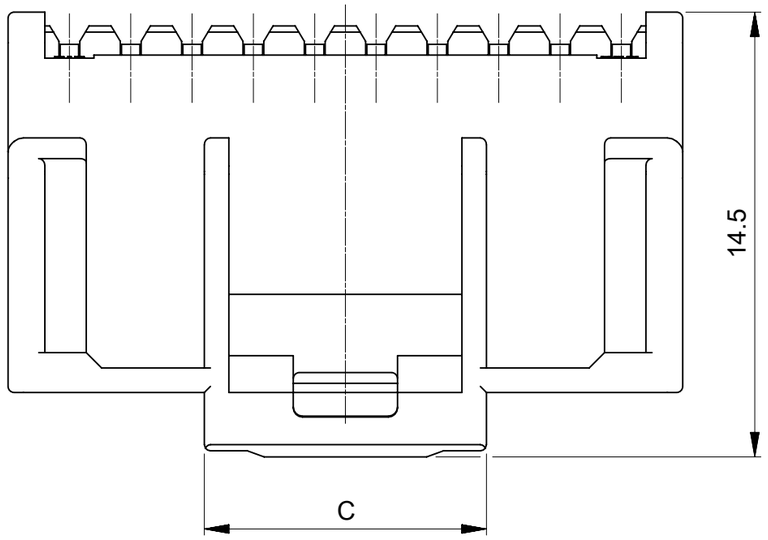

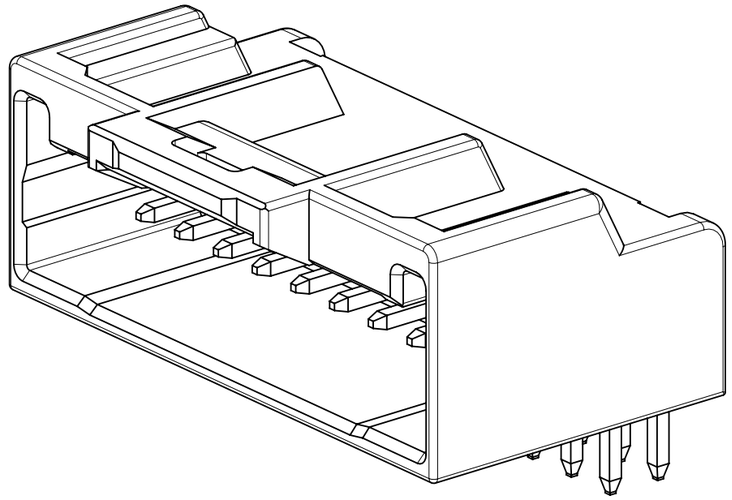

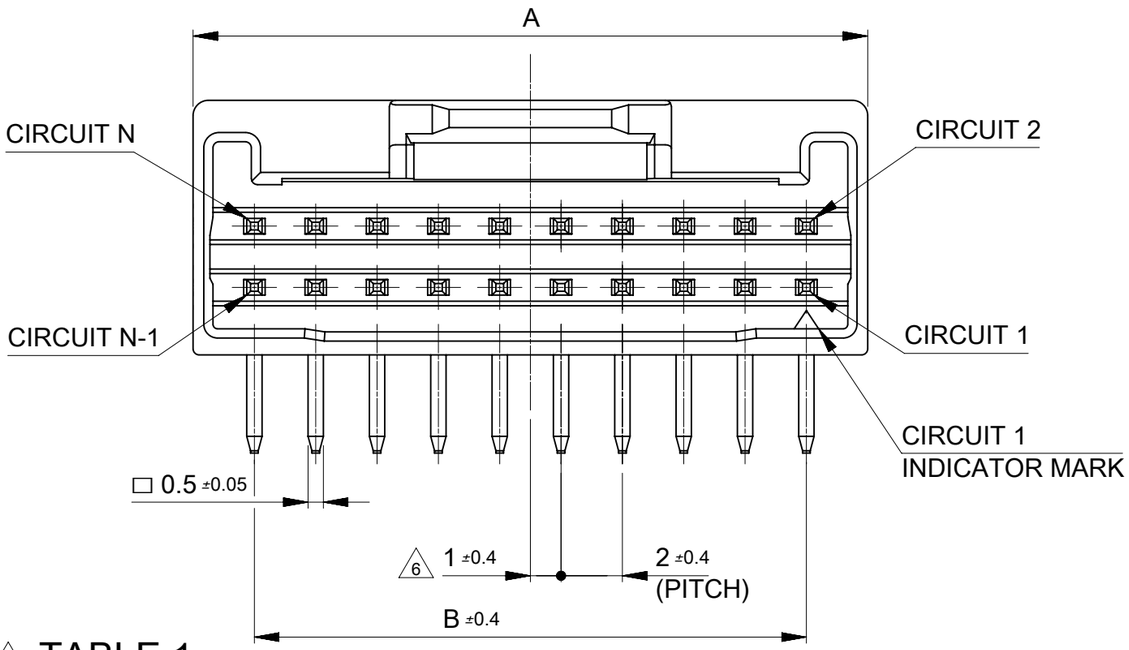

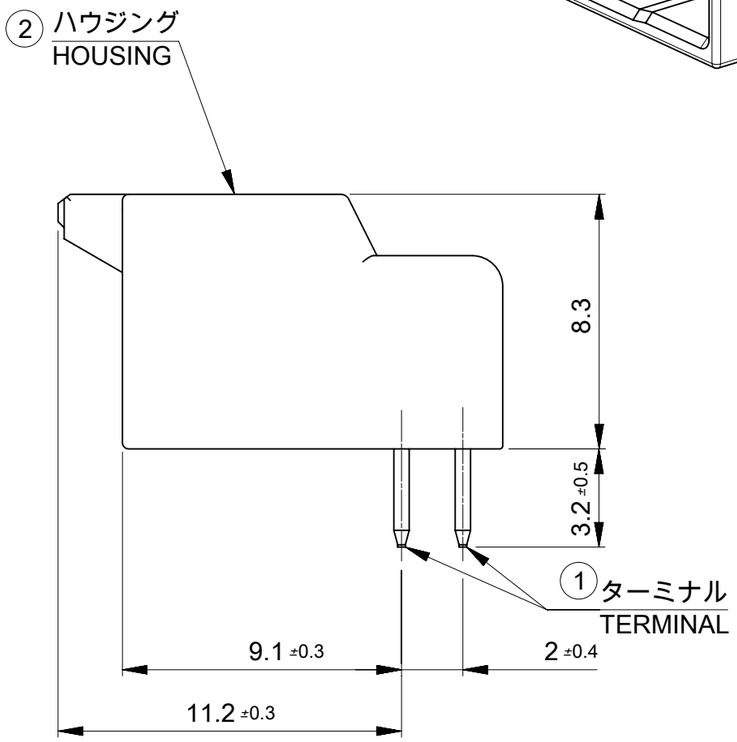

9.2	38	42	40
9.2	36	40	38
9.2	34	38	36
9.2	32	36	34
9.2	30	34	32
9.2	28	32	30
9.2	26	30	28
9.2	24	28	26
9.2	22	26	24
9.2	20	24	22
9.2	18	22	20
9.2	16	20	18
9.2	14	18	16
9.2	12	16	14
9.2	10	14	12
7.3	8	12	10
C	B	A	極数 CIRCUIT SIZE

△1 TABLE 1

番号 No.	部品 PART	材質 MATERIAL	
①	ターミナル TERMINAL	黄銅, BRASS	
		下地めっき UNDER PLATING	ニッケルめっき 1 micro-meter MIN NICKEL PLATING 1 micro-meter MIN
		コンタクト CONTACT	金めっき 0.1/0.38/0.76 micro-meters MIN GOLD PLATING 0.1/0.38/0.76 micro-meters MIN
		テール SOLDER TAIL	無光沢錫めっき 1 micro-meter MIN MATTE TIN PLATING 1 micro-meter MIN
②	ハウジング HOUSING	ポリアミド(PA)ガラス入り, UL94V-0, 色 : SEE CHART POLYAMIDE(PA) GLASS FILLED, UL94V-0, COLOR : SEE CHART	

DOCUMENT STATUS | P1 | RELEASE DATE | 2024/11/19 08:37:21

THIS DRAWING CONTAINS INFORMATION THAT IS PROPRIETARY TO MOLEX ELECTRONIC TECHNOLOGIES, LLC AND SHOULD NOT BE USED WITHOUT WRITTEN PERMISSION

DIMENSION UNITS: mm | SCALE: NTS

GENERAL TOLERANCES (UNLESS SPECIFIED)

ANGULAR TOL	±	3.0 °
4 PLACES	±	0.2
3 PLACES	±	0.2
2 PLACES	±	0.2
1 PLACE	±	0.2
0 PLACES	±	0.2

DRAFT WHERE APPLICABLE MUST REMAIN WITHIN DIMENSIONS

CURRENT REV DESC: REMOVED OBSOLETED PART NUMBERS AS PER PCN#5154356.

EC NO: 803783
DRWN: RAVINR1 2024/11/04
CHK'D: GGA 2024/11/19
APPR: GGA 2024/11/19

INITIAL REVISION:
DRWN: SNAKAMURA08 2019/10/08
APPR: KOMURAKAMI 2020/03/18

THIRD ANGLE PROJECTION | DRAWING: A3-SIZE | SERIES: 208659

molex

IGRID 2.0 WIRE TO BOARD
RIGHT ANGLE TH PLUG ASSEMBLY GOLD PLATING

PRODUCT CUSTOMER DRAWING

DOCUMENT NUMBER	DOC TYPE	DOC PART	REVISION
2086590000-SD	PSD	000	B1

MATERIAL NUMBER	CUSTOMER	SHEET NUMBER
SEE CHART	GENERAL	1 OF 4

FORMAT: master-lb-prod-A3
REVISION: J1
DATE: 2021/05/01

NOTES.

1. 材料及び仕上げ(めっき仕様) : TABLE 1 参照
   MATERIAL AND FINISHES : SEE TABLE 1
2. 適用製品及び各種仕様書はSHEET 3を御参照ください。
   PLEASE REFER TO SHEET 3 ABOUT APPLICABLE PRODUCTS AND VARIOUS SPECIFICATIONS.
3. 本製品は金めっき品です。錫めっき品は5018760000-SD/PSD/000を御参照ください。
   THIS PRODUCT IS A GOLD PLATING. FOR TIN PLATING PRODUCT,
   PLEASE REFER TO 5018760000-SD/PSD/000.
4. 極数/2 = 偶数に適用
   APPLY FOR CIRCUIT SIZE / 2 =EVEN
5. ソルダーテール部に錫めっきを使用している為、外観に摺動痕が付く場合があります。
   THE WOUND OF FRICTION MIGHT ADHERE TO EXTERNALS
   BECAUSE THE TIN PLATING IS USED IN SOLDER-TAIL PART.
6. 発注番号 : SHEET 4 参照
   ORDER No. : PLEASE REFER TO SHEET 4 FOR PRODUCT LIST

208659 ****

極数 CIRCUIT SIZE	
ハウジングカラー HOUSING COLOR	
0:ナチュラル NATURAL (白 WHITE)	
1:黒 BLACK	
金めっき厚 GOLD PLATING THICKNESS	
4 : 0.1 micro-meters MIN	
6 : 0.38 micro-meters MIN	
7 : 0.76 micro-meters MIN	

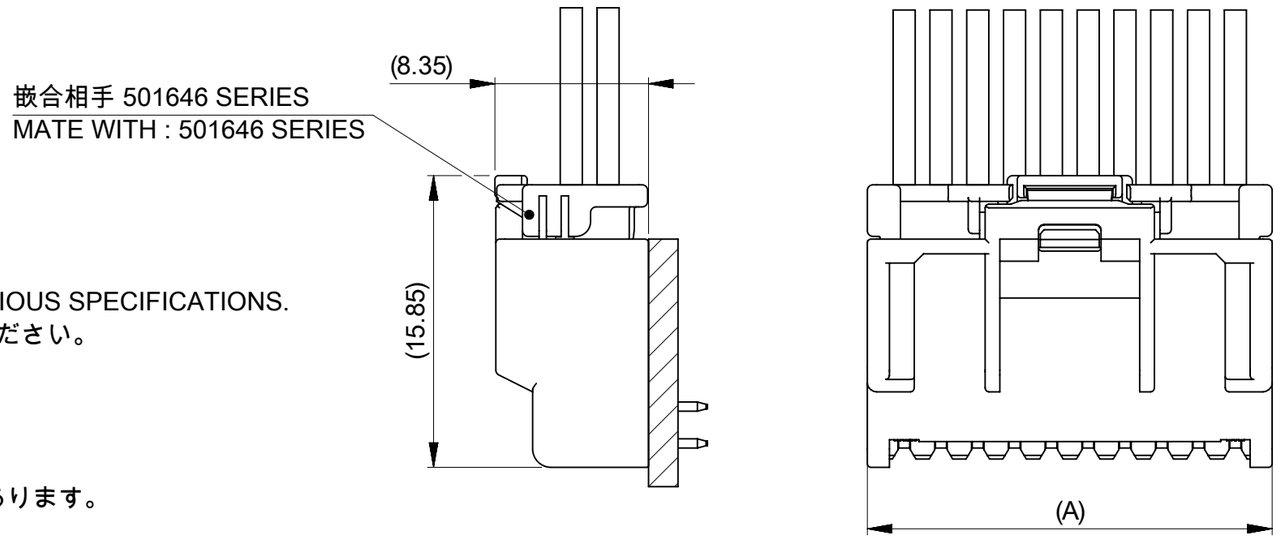

嵌合相手 501646 SERIES
MATE WITH : 501646 SERIES

嵌合図
MATED CONNECTORS

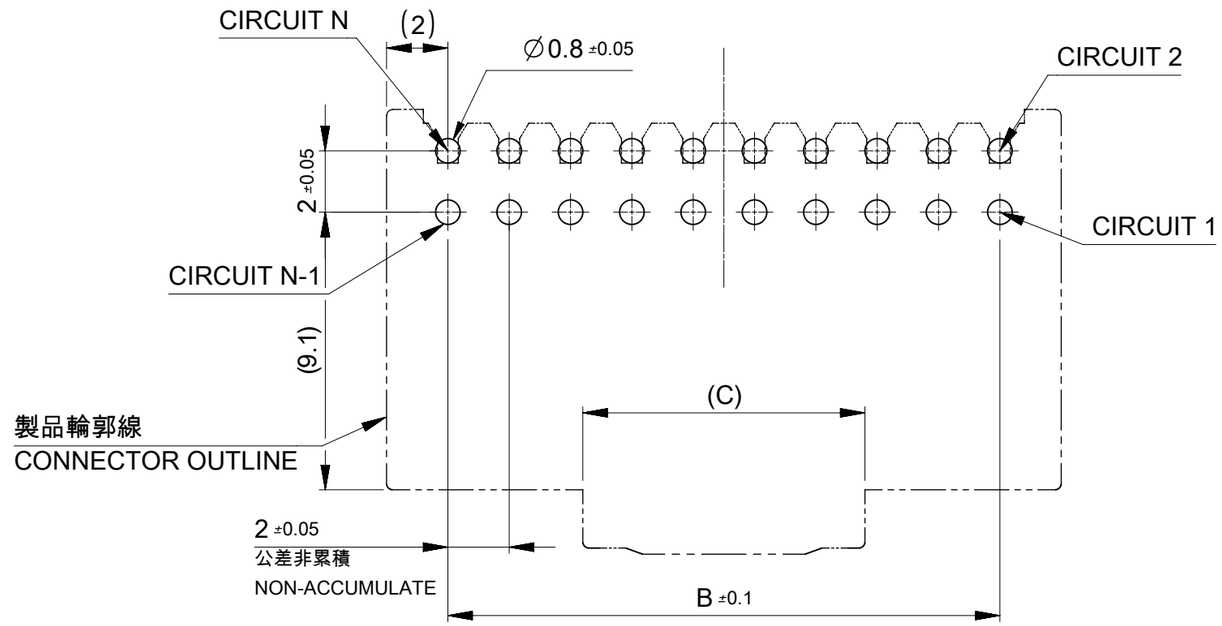

基板取付穴推奨寸法(マウント面)
RECOMMENDED PCB HOLE DIMENSION (MOUNTING SIDE)
参考基板厚 t=1.2~1.6
REFERANCE PCB THICKNESS t=1.2~1.6

THIS DRAWING CONTAINS INFORMATION THAT IS PROPRIETARY TO MOLEX ELECTRONIC TECHNOLOGIES, LLC AND SHOULD NOT BE USED WITHOUT WRITTEN PERMISSION

DIMENSION UNITS: mm	SCALE: NTS	CURRENT REV DESC: REMOVED OBSOLETED PART NUMBERS AS PER PCN#5154356.	molex
GENERAL TOLERANCES (UNLESS SPECIFIED)			IGRID 2.0 WIRE TO BOARD RIGHT ANGLE TH PLUG ASSEMBLY GOLD PLATING
ANGULAR TOL ± 3.0 °		EC NO: 803783	PRODUCT CUSTOMER DRAWING
4 PLACES ± 0.2		DRWN: RAVINR1 2024/11/04	DOCUMENT NUMBER: 2086590000-SD; DOC TYPE: PSD; DOC PART: 000; REVISION: B1
3 PLACES ± 0.2		CHK'D: GGA 2024/11/19	
2 PLACES ± 0.2		APPR: GGA 2024/11/19	
1 PLACE ± 0.2		INITIAL REVISION:	
0 PLACES ± 0.2		DRWN: SNAKAMURA08 2019/10/08	
DRAFT WHERE APPLICABLE MUST REMAIN WITHIN DIMENSIONS		APPR: KOMURAKAMI 2020/03/18	THIRD ANGLE PROJECTION; DRAWING: A3-SIZE; SERIES: 208659; MATERIAL NUMBER: SEE CHART; CUSTOMER: GENERAL; SHEET NUMBER: 2 OF 4

DOCUMENT STATUS	P1	RELEASE DATE	2024/11/19 08:37:21

FORMAT: master-tb-prod-A3
REVISION: J1
DATE: 2021/05/01

△3 適用製品及び各種仕様書
APPLICABLE PRODUCTS AND VARIOUS SPECIFICATIONS

	PART NUMBER	DOCUMENT NUMBER
梱包仕様書 PACKAGING SPECIFICATION	208659 ****	2086599200-SPK PS 200

適用嵌合相手 MATE WITH	HOUSING	TERMINAL (GOLD PLATING) #22-28
シリーズ番号 SERIES NUMBER	501646 SERIES	503095 SERIES
製品仕様書 PRODUCT SPECIFICATION	5016460000-PS PS 000	
アプリケーション仕様書 APPLICATION SPECIFICATION	5016460000 PS A00	

THIS DRAWING CONTAINS INFORMATION THAT IS PROPRIETARY TO MOLEX ELECTRONIC TECHNOLOGIES, LLC AND SHOULD NOT BE USED WITHOUT WRITTEN PERMISSION

DIMENSION UNITS	SCALE
mm	NTS

GENERAL TOLERANCES (UNLESS SPECIFIED)		
ANGULAR TOL	±	3.0 °
4 PLACES	±	0.2
3 PLACES	±	0.2
2 PLACES	±	0.2
1 PLACE	±	0.2
0 PLACES	±	0.2

DRAFT WHERE APPLICABLE MUST REMAIN WITHIN DIMENSIONS

CURRENT REV DESC: REMOVED OBSOLETED PART NUMBERS AS PER PCN#5154356.

EC NO: 803783
DRWN: RAVINR1 2024/11/04
CHK'D: GGA 2024/11/19
APPR: GGA 2024/11/19

INITIAL REVISION:
DRWN: SNAKAMURA08 2019/10/08
APPR: KOMURAKAMI 2020/03/18

molex

IGRID 2.0 WIRE TO BOARD
RIGHT ANGLE TH PLUG ASSEMBLY GOLD PLATING

PRODUCT CUSTOMER DRAWING

DOCUMENT NUMBER	DOC TYPE	DOC PART	REVISION
2086590000-SD	PSD	000	B1

THIRD ANGLE PROJECTION	DRAWING	SERIES	MATERIAL NUMBER	CUSTOMER	SHEET NUMBER
	A3-SIZE	208659	SEE CHART	GENERAL	3 OF 4

DOCUMENT STATUS	P1	RELEASE DATE	2024/11/19 08:37:21

FORMAT: master-tb-prod-A3
REVISION: J1
DATE: 2021/05/01

製品形状
PRODUCT SHAPE

10, 12 極
10, 12 CIRCUIT

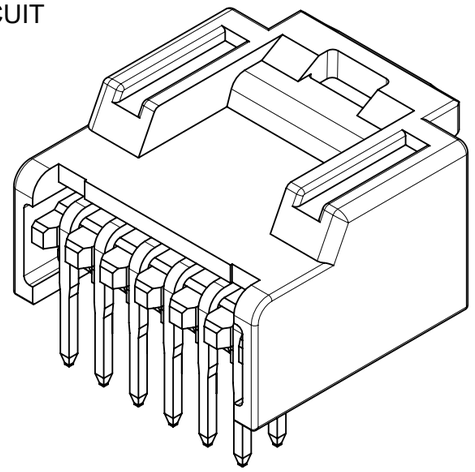

14 - 40 極
14 - 40 CIRCUIT

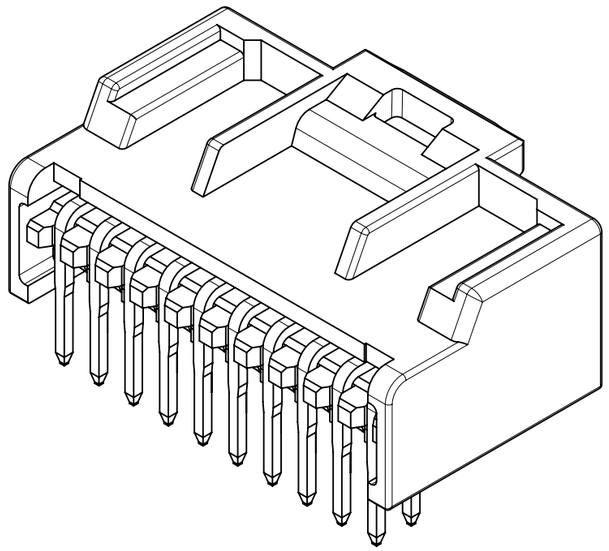

製品一覧 PRODUCT LIST

0.1 micro-meters MIN				接点部金めっき厚 GOLD PLATING THICKNESS ON CONTACT AREA
黒 : BLACK		ナチュラル : NATURAL (白 : WHITE)		HOUSING COLOR
208659	4041	208659	4040	40
↑	3841	↑	3840	38
	3641		3640	36
	3441		3440	34
	3241		3240	32
	3041		3040	30
	2841		2840	28
	2641		2640	26
	2441		2440	24
	2241		2240	22
	2041		2040	20
	1841		1840	18
	1641		1640	16
	1441		1440	14
↓	1241	↓	1240	12
208659	1041	208659	1040	10
発注番号 ORDER No.				極数
PACKAGING STYLE : TRAY				CIRCUIT SIZE

THIS DRAWING CONTAINS INFORMATION THAT IS PROPRIETARY TO MOLEX ELECTRONIC TECHNOLOGIES, LLC AND SHOULD NOT BE USED WITHOUT WRITTEN PERMISSION

DIMENSION UNITS	SCALE
mm	NTS

GENERAL TOLERANCES (UNLESS SPECIFIED)

ANGULAR TOL	± 3.0 °
4 PLACES	± 0.2
3 PLACES	± 0.2
2 PLACES	± 0.2
1 PLACE	± 0.2
0 PLACES	± 0.2

DRAFT WHERE APPLICABLE MUST REMAIN WITHIN DIMENSIONS

CURRENT REV DESC: REMOVED OBSOLETED PART NUMBERS AS PER PCN#5154356.

EC NO: 803783
DRWN: RAVINR1 2024/11/04
CHK'D: GGA 2024/11/19
APPR: GGA 2024/11/19

INITIAL REVISION:
DRWN: SNAKAMURA08 2019/10/08
APPR: KOMURAKAMI 2020/03/18

molex

IGRID 2.0 WIRE TO BOARD
RIGHT ANGLE TH PLUG ASSEMBLY GOLD PLATING

PRODUCT CUSTOMER DRAWING

DOCUMENT NUMBER	DOC TYPE	DOC PART	REVISION
2086590000-SD	PSD	000	B1

THIRD ANGLE PROJECTION	DRAWING	SERIES	MATERIAL NUMBER	CUSTOMER	SHEET NUMBER
	A3-SIZE	208659	SEE CHART	GENERAL	4 OF 4

DOCUMENT STATUS	P1	RELEASE DATE	2024/11/19 08:37:21

FORMAT: master-tb-prod-A3
REVISION: J1
DATE: 2021/05/01