

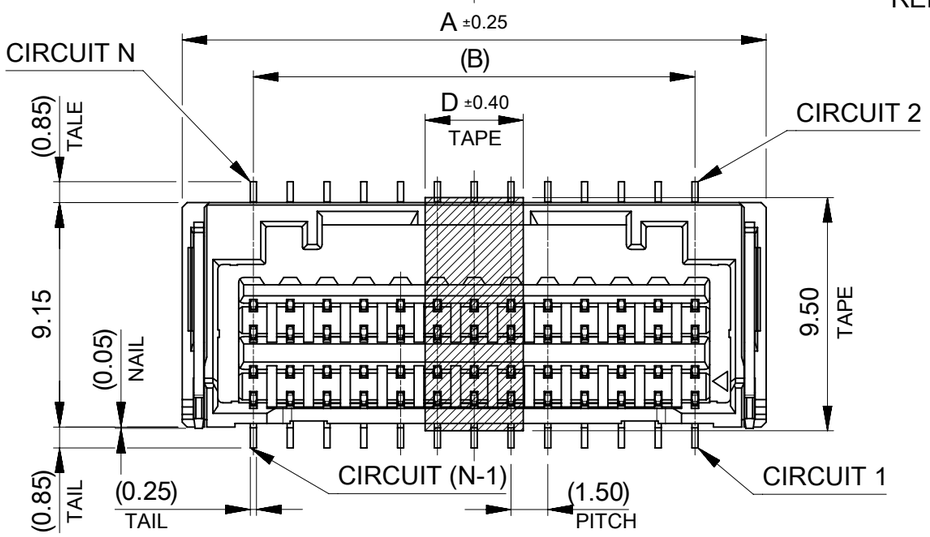

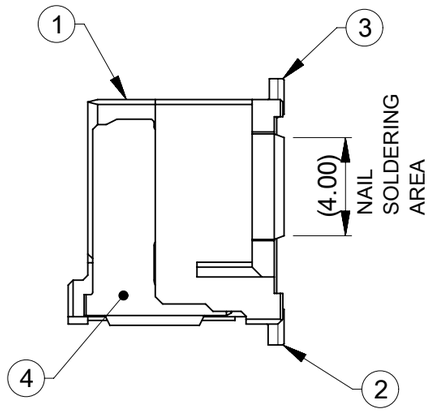

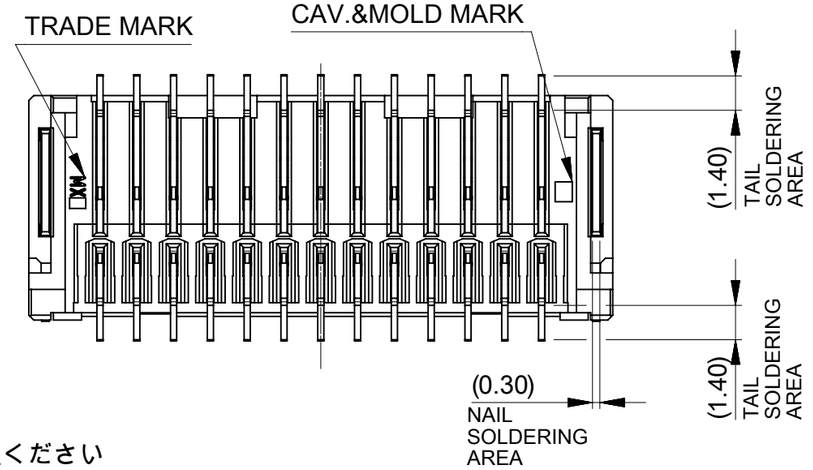

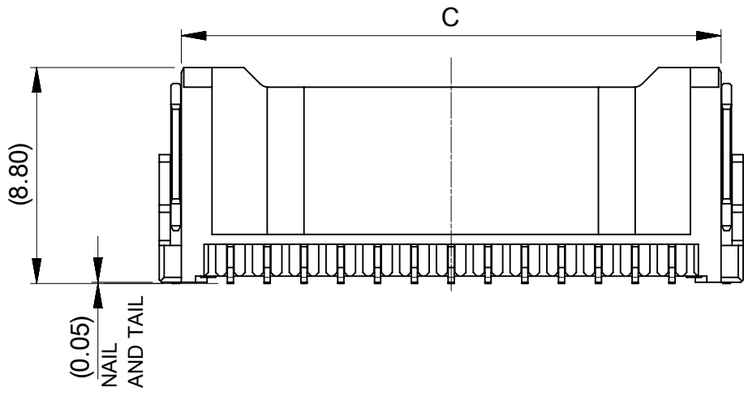

NOTE

1. 端子テール部およびネイルの平坦度: 0.1mm MAX
   TAIL AND NAIL COPLANARITY TO BE 0.1mm MAX
△2 (極数/2) = 偶数 に適用
   APPLY FOR (CIRCUIT SIZE/2) = EVEN.
△3 関連製品・書類はSHEET5を参照ください
   REFER TO SHEET 5 ABOUT RELATED PRODUCTS AND DOCUMENTS.

△4 オーダー番号(製品番号): SHEET 6の製品一覧を参照ください
   ORDER No. (PRODUCT No.)：REFER TO SHEET 6 FOR PRODUCT LIST.

213227 * * * *

- 213227: シリーズ番号 / SERIES NO
- 1st *: 極数 / CIRCUIT SIZE
- 2nd *: 金めっき厚 / GOLD PLATING THICKNESS
- 3rd *: 色 / COLOR

CIRCUIT	No.	GOLD THK [micro-meter]	No.	COLOR
08～34	1	0.1	0	ナチュラル　NATURAL
	3	0.38	1	黒　BLACK
	7	0.76		

番号 NO	部品 PART	材質 MATERIAL	
①	ハウジング HOUSING	ポリアミド(PA)　UL94V-0 色：SEE CHART POLYAMIDE(PA) UL94V-0 COLOR : SEE CHART	
② ③	ターミナル TERMINAL	銅合金 COPPER ALLOY	
		コンタクト部 CONTACT AREA	金めっき：製品一覧参照 GOLD PLATING：SEE PRODUCT LIST
		テール部 TAIL AREA	無光沢錫めっき：1.0 micro-meter MIN MATTE TIN PLATING：1.0 micro-meter MIN
		下地めっき(全面) UNDER PLATING (WHOLE SURFACE)	ニッケルめっき：1.0 micro-meter MIN NICKEL PLATING ：1.0 micro-meter MIN
④	ネイル NAIL	黄銅 BRASS	
		無光沢錫めっき　：1.0 micro-meter MIN MATTE TIN PLATING	
		ニッケルめっき(下地)：1.0 micro-meter MIN NICKEL PLATING (UNDER PLATING)	

5	28.0	±0.25	24.0	29.8	34
	26.5		22.5	28.3	32
	25.0		21.0	26.8	30
4	23.5		19.5	25.3	28
	22.0		18.0	23.8	26
	20.5		16.5	22.3	24
	19.0		15.0	20.8	22
	17.5		13.5	19.3	20
	16.0		12.0	17.8	18
	14.5		10.5	16.3	16
	13.0		9.0	14.8	14
3	11.5		7.5	13.3	12
	10.0		6.0	11.8	10
	8.5	±0.2	4.5	10.3	8
D	C		B	A	極数 CKT NO

THIS DRAWING CONTAINS INFORMATION THAT IS PROPRIETARY TO MOLEX ELECTRONIC TECHNOLOGIES, LLC AND SHOULD NOT BE USED WITHOUT WRITTEN PERMISSION

DIMENSION UNITS	SCALE
mm	NTS

GENERAL TOLERANCES (UNLESS SPECIFIED)

ANGULAR TOL	±	3.0 °
4 PLACES	±	0.2
3 PLACES	±	0.2
2 PLACES	±	0.2
1 PLACE	±	0.2
0 PLACES	±	0.2

DRAFT WHERE APPLICABLE MUST REMAIN WITHIN DIMENSIONS

CURRENT REV DESC:

EC NO: 742719
DRWN: MIKEDA01 2023/06/23
CHK'D: SAKIYAMA 2023/06/23
APPR: AIDA 2023/06/23

INITIAL REVISION:
DRWN: MIKEDA01 2019/10/01
APPR: KOMURAKAMI 2019/11/20

molex

CLIK-MATE 1.5
DUAL ROW SMT VT TYPE GOLD PLATING

PRODUCT CUSTOMER DRAWING

DOCUMENT NUMBER	DOC TYPE	DOC PART	REVISION
2132270000-SD	PSD	000	D

THIRD ANGLE PROJECTION	DRAWING	SERIES	MATERIAL NUMBER	CUSTOMER	SHEET NUMBER
	A3-SIZE	213227	SEE CHART	GENERAL	1 OF 6

DOCUMENT STATUS	P1	RELEASE DATE	2023/06/23 10:36:44

FORMAT: master-tb-prod-A3
REVISION: J
DATE: 2020/01/14

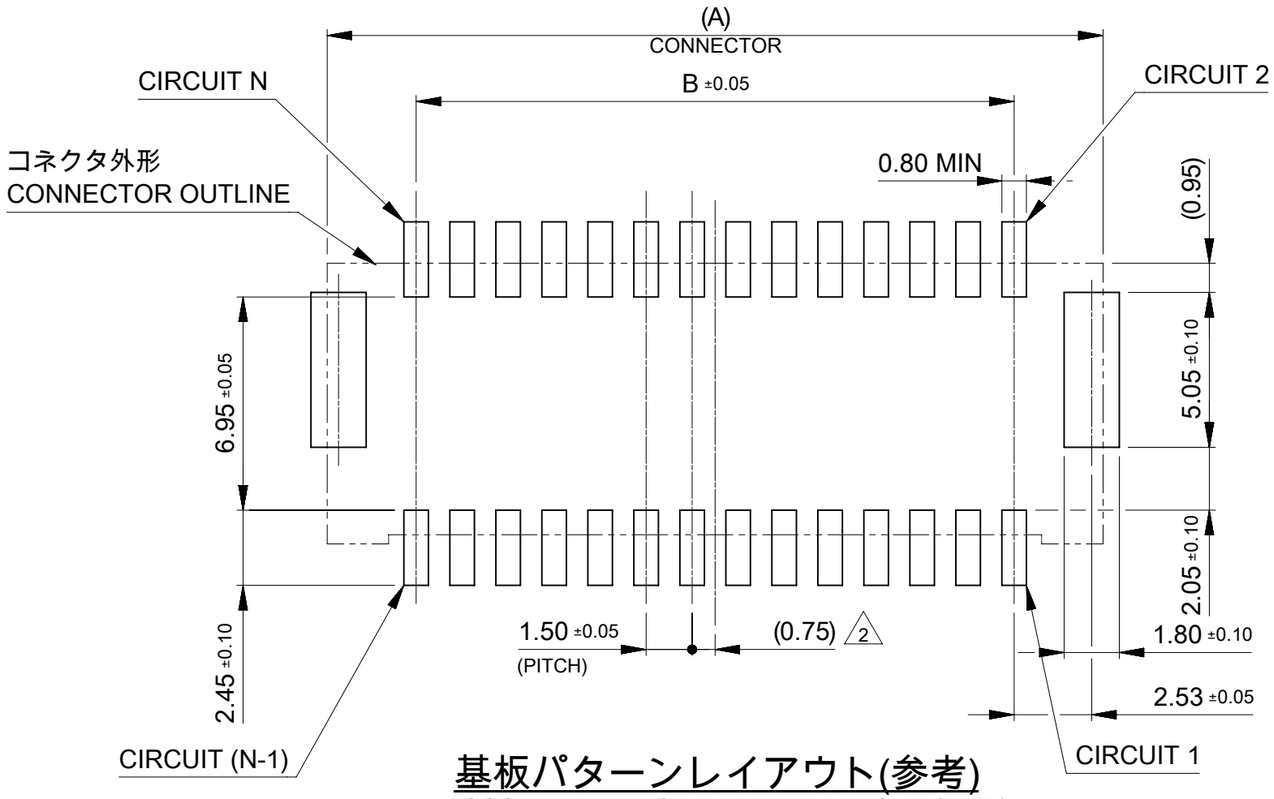

基板パターンレイアウト(参考)

RECCOMENDED PCB PATTERN LAYOUT (REF.)

(参考：メタルマスク厚さ　0.10mm, マスク開口率100%)

(REFERENCE: METAL MASK THICKNESS 0.10MM, APERTURE RATIO 100%)

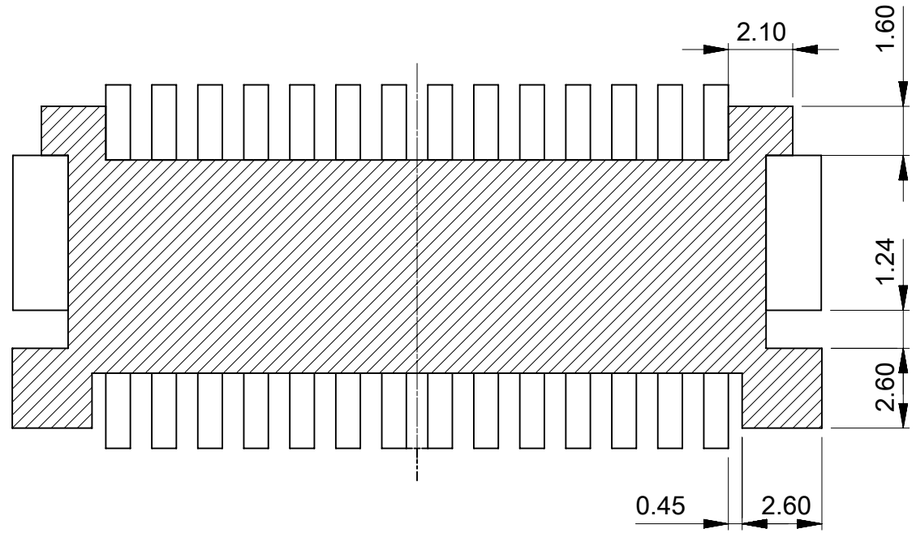

パターン非推奨エリア

パターンを引き回す際は、製品機能に影響がないことをご確認ください。
PATTERN IS NOT RECCOMENDED ON THE HATCHED AREA.
PLEASE CHECK NOT TO HAVE PROBLEM FOR PRODUCT FUNCTION
WHEN SETTING PATTERN ON THE HATCHED AREA.

THIS DRAWING CONTAINS INFORMATION THAT IS PROPRIETARY TO MOLEX ELECTRONIC TECHNOLOGIES, LLC AND SHOULD NOT BE USED WITHOUT WRITTEN PERMISSION

DIMENSION UNITS	SCALE
mm	NTS

GENERAL TOLERANCES (UNLESS SPECIFIED)

ANGULAR TOL	±	3.0 °
4 PLACES	±	0.2
3 PLACES	±	0.2
2 PLACES	±	0.2
1 PLACE	±	0.2
0 PLACES	±	0.2

DRAFT WHERE APPLICABLE MUST REMAIN WITHIN DIMENSIONS

CURRENT REV DESC:

EC NO: 742719
DRWN: MIKEDA01 2023/06/23
CHK'D: SAKIYAMA 2023/06/23
APPR: AIDA 2023/06/23

INITIAL REVISION:
DRWN: MIKEDA01 2019/10/01
APPR: KOMURAKAMI 2019/11/20

molex

CLIK-MATE 1.5
DUAL ROW SMT VT TYPE GOLD PLATING

PRODUCT CUSTOMER DRAWING

DOCUMENT NUMBER	DOC TYPE	DOC PART	REVISION
2132270000-SD	PSD	000	D

THIRD ANGLE PROJECTION	DRAWING	SERIES	MATERIAL NUMBER	CUSTOMER	SHEET NUMBER
	A3-SIZE	213227	SEE CHART	GENERAL	2 OF 6

DOCUMENT STATUS	P1	RELEASE DATE	2023/06/23 10:36:44

FORMAT: master-tb-prod-A3
REVISION: J
DATE: 2020/01/14

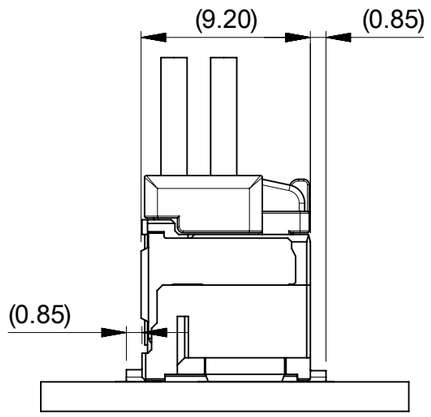

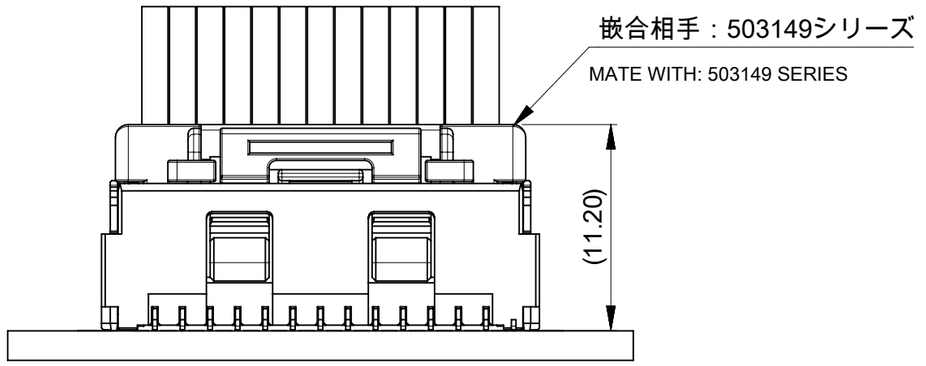

嵌合図
MATED CONNECTORS

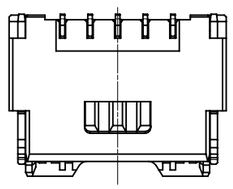

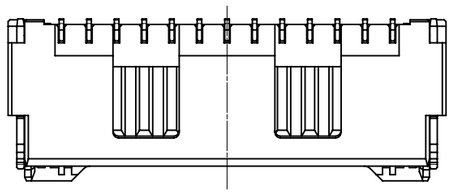

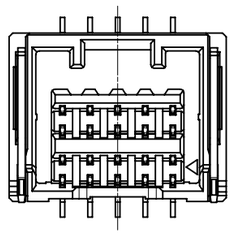

8-10極
8-10 CKT

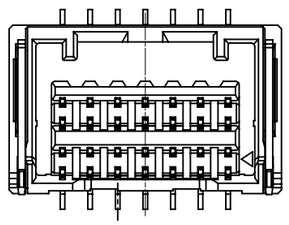

12-18極
12-18 CKT

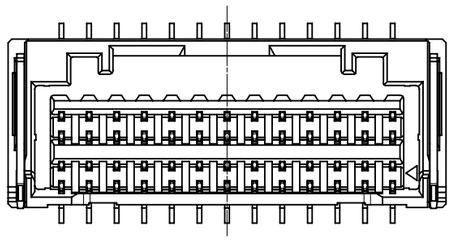

20-28極
20-28 CKT

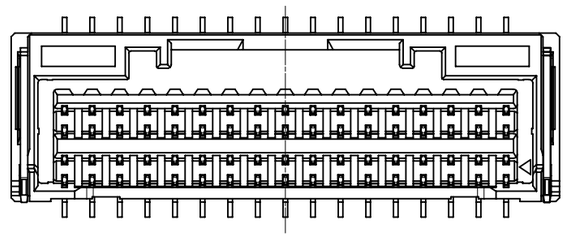

30-34極
30-34 CKT

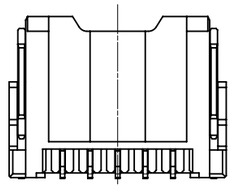

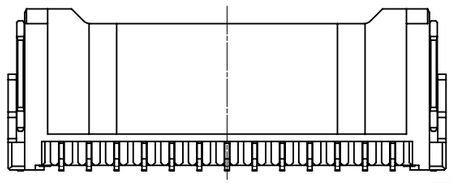

極数別ハウジング形状
HOUSING SHAPE OF EACH CKTS

THIS DRAWING CONTAINS INFORMATION THAT IS PROPRIETARY TO MOLEX ELECTRONIC TECHNOLOGIES, LLC AND SHOULD NOT BE USED WITHOUT WRITTEN PERMISSION

DIMENSION UNITS	SCALE
mm	NTS

GENERAL TOLERANCES (UNLESS SPECIFIED)

ANGULAR TOL	±	3.0 °
4 PLACES	±	0.2
3 PLACES	±	0.2
2 PLACES	±	0.2
1 PLACE	±	0.2
0 PLACES	±	0.2

DRAFT WHERE APPLICABLE MUST REMAIN WITHIN DIMENSIONS

CURRENT REV DESC:

EC NO: 742719
DRWN: MIKEDA01 2023/06/23
CHK'D: SAKIYAMA 2023/06/23
APPR: AIDA 2023/06/23

INITIAL REVISION:
DRWN: MIKEDA01 2019/10/01
APPR: KOMURAKAMI 2019/11/20

molex

CLIK-MATE 1.5
DUAL ROW SMT VT TYPE GOLD PLATING

PRODUCT CUSTOMER DRAWING

DOCUMENT NUMBER	DOC TYPE	DOC PART	REVISION
2132270000-SD	PSD	000	D

THIRD ANGLE PROJECTION	DRAWING	SERIES	MATERIAL NUMBER	CUSTOMER	SHEET NUMBER
	A3-SIZE	213227	SEE CHART	GENERAL	3 OF 6

DOCUMENT STATUS	P1	RELEASE DATE	2023/06/23 10:36:44

FORMAT: master-lb-prod-A3
REVISION: J
DATE: 2020/01/14

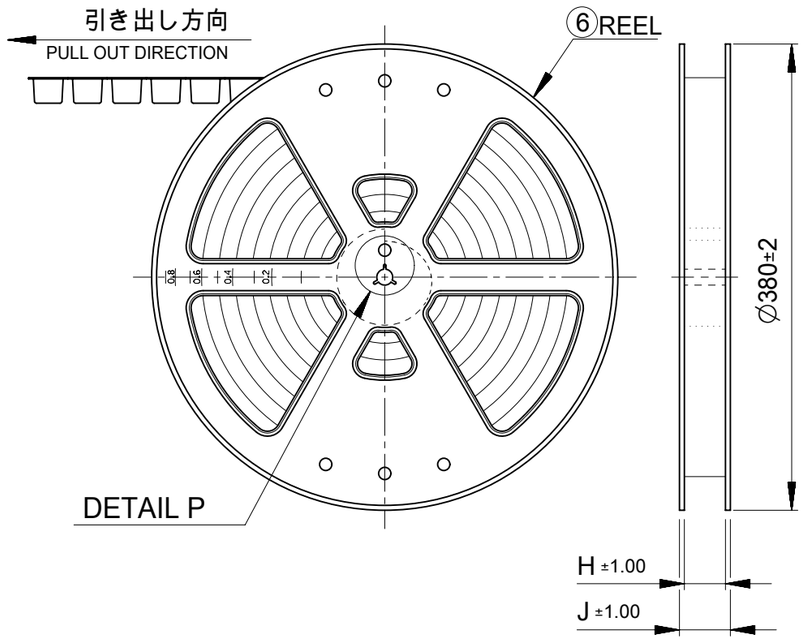

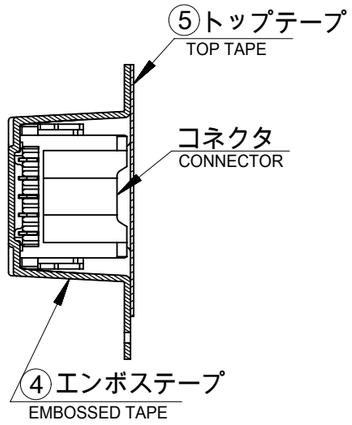

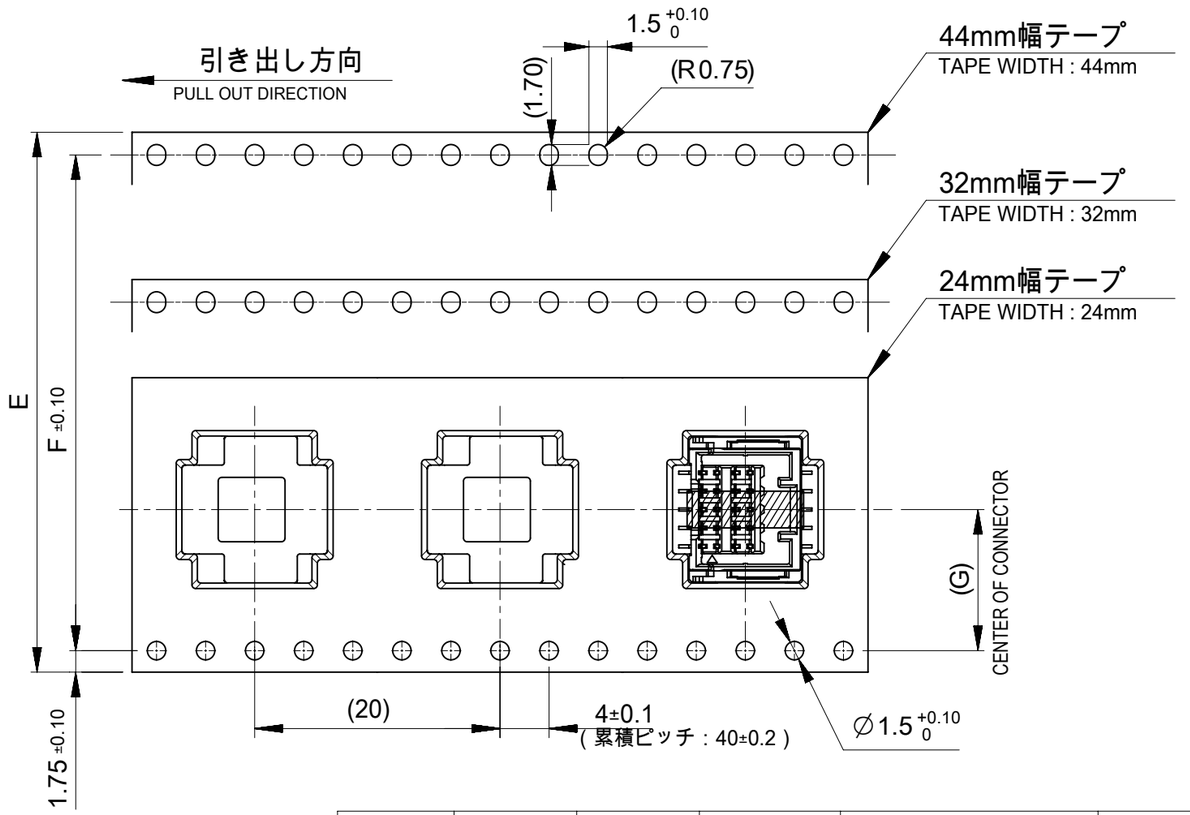

NOTE

5．梱包数量　：　450個 / リール
NUMBER OF CONNECTORS : 450 PIECES/REEL

6．リードテープ長さ
LEAD TAPE LENGTH

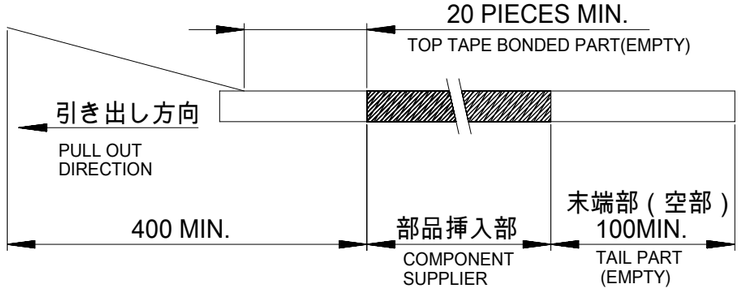

7. トップテープの剥離強度はJIS C0806-3に準拠
TOP TAPE PEELING OFF FORCE IS DIFINED BY JIS C0806-3

8. 本製品は乾燥剤入り、ハイバリア梱包である
THIS PRODUCT IS DELIVERED IN HIGH BARRIER PACKAGE WITH DESICCANT.

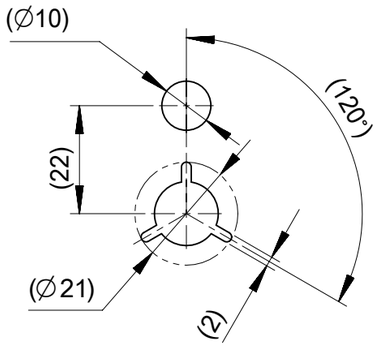

DETAIL P

番号 No.	部品 PART	材質 MATERIAL
④	エンボステープ EMBOSSED TAPE	ポリスチレン(PS) POLYSTYLENE
⑤	トップテープ TOP TAPE	ポリエチレン、ポリエチレンテレフタレート POLYETHYLENE (PE), POLYETHYLENE TELEPHTHALATE(PET)
⑥	リール REEL	ポリスチレン　(リサイクル材を含む) POLYSTYLENE　(CONTAINED RECYCLED MATERIAL)

J	H	G	F	エンボステープ幅E WIDTH OF TAPE	CKT NO.
49.4	45.4	20.2	40.4	44±0.3	34
					32
					30
					28
					26
					24
					22
					20
					18
37.4	33.4	14.2	28.4	32±0.3	16
					14
					12
29.4	25.4	11.5	-	24 +0.3 -0.1	10
					8

THIS DRAWING CONTAINS INFORMATION THAT IS PROPRIETARY TO MOLEX ELECTRONIC TECHNOLOGIES, LLC AND SHOULD NOT BE USED WITHOUT WRITTEN PERMISSION

DIMENSION UNITS	SCALE
mm	NTS

GENERAL TOLERANCES (UNLESS SPECIFIED)

ANGULAR TOL	±	3.0 °
4 PLACES	±	0.2
3 PLACES	±	0.2
2 PLACES	±	0.2
1 PLACE	±	0.2
0 PLACES	±	0.2

DRAFT WHERE APPLICABLE MUST REMAIN WITHIN DIMENSIONS

CURRENT REV DESC:

EC NO: 742719
DRWN: MIKEDA01 2023/06/23
CHK'D: SAKIYAMA 2023/06/23
APPR: AIDA 2023/06/23

INITIAL REVISION:
DRWN: MIKEDA01 2019/10/01
APPR: KOMURAKAMI 2019/11/20

molex

CLIK-MATE 1.5
DUAL ROW SMT VT TYPE GOLD PLATING

PRODUCT CUSTOMER DRAWING

DOCUMENT NUMBER	DOC TYPE	DOC PART	REVISION
2132270000-SD	PSD	000	D

THIRD ANGLE PROJECTION	DRAWING	SERIES	MATERIAL NUMBER	CUSTOMER	SHEET NUMBER
	A3-SIZE	213227	SEE CHART	GENERAL	4 OF 6

DOCUMENT STATUS	P1	RELEASE DATE	2023/06/23 10:36:44

FORMAT: master-tb-prod-A3
REVISION: J
DATE: 2020/01/14

△3 適用製品及び各種仕様書
APPLICABLE PRODUCTS AND VARIOUS SPECIFICATIONS

梱包仕様書 PACKAGING SPECIFICATION	PART NUMBER	DOCUMENT NUMBER
	213227 ****	2132279200-SPK

適用嵌合相手 MATE WITH	HOUSING	TERMINAL (GOLD PLATING)		
		PLATING THK	#24-28	#28-30
製品番号 PRODUCT NUMBER	503149 ****	0.1 micro-meters	213028 1*00	213029 1*00
		0.38 micro-meters	213028 3*00	213029 3*00
		0.76 micro-meters	213028 7*00	213029 7*00
製品仕様書 PRODUCT SPECIFICATION	5031490002-PS/PS/000			
アプリケーション仕様書 APPLICATION SPECIFICATION	AS-503149-001			

THIS DRAWING CONTAINS INFORMATION THAT IS PROPRIETARY TO MOLEX ELECTRONIC TECHNOLOGIES, LLC AND SHOULD NOT BE USED WITHOUT WRITTEN PERMISSION

DIMENSION UNITS	SCALE
mm	NTS

GENERAL TOLERANCES (UNLESS SPECIFIED)

ANGULAR TOL	±	3.0 °
4 PLACES	±	0.2
3 PLACES	±	0.2
2 PLACES	±	0.2
1 PLACE	±	0.2
0 PLACES	±	0.2

DRAFT WHERE APPLICABLE MUST REMAIN WITHIN DIMENSIONS

CURRENT REV DESC:

EC NO: 742719
DRWN: MIKEDA01 2023/06/23
CHK'D: SAKIYAMA 2023/06/23
APPR: AIDA 2023/06/23

INITIAL REVISION:
DRWN: MIKEDA01 2019/10/01
APPR: KOMURAKAMI 2019/11/20

molex

CLIK-MATE 1.5
DUAL ROW SMT VT TYPE GOLD PLATING

PRODUCT CUSTOMER DRAWING

DOCUMENT NUMBER	DOC TYPE	DOC PART	REVISION
2132270000-SD	PSD	000	D

THIRD ANGLE PROJECTION	DRAWING	SERIES	MATERIAL NUMBER	CUSTOMER	SHEET NUMBER
	A3-SIZE	213227	SEE CHART	GENERAL	5 OF 6

DOCUMENT STATUS	P1	RELEASE DATE	2023/06/23 10:36:44

FORMAT: master-tb-prod-A3
REVISION: J
DATE: 2020/01/14

△4 製品一覧
PRODUCTS LIST

黒 BLACK	ナチュラル NATURAL	HOUSING COLOR	
213227 3411	213227 3410	34	213227 **1* (GOLD PLATING THICKNESS: 0.1 micro-meters MIN)
213227 3211	213227 3210	32	
213227 3011	213227 3010	30	
213227 2811	213227 2810	28	
213227 2611	213227 2610	26	
213227 2411	213227 2410	24	
213227 2211	213227 2210	22	
213227 2011	213227 2010	20	
213227 1811	213227 1810	18	
213227 1611	213227 1610	16	
213227 1411	213227 1410	14	
213227 1211	213227 1210	12	
213227 1011	213227 1010	10	
213227 0811	213227 0810	8	
オーダー番号 ORDER No		極数 CKT	MODEL NO

黒 BLACK	ナチュラル NATURAL	HOUSING COLOR	
213227 3431	213227 3430	34	213227 **3* (GOLD PLATING THICKNESS: 0.38 micro-meters MIN)
213227 3231	213227 3230	32	
213227 3031	213227 3030	30	
213227 2831	213227 2830	28	
213227 2631	213227 2630	26	
213227 2431	213227 2430	24	
213227 2231	213227 2230	22	
213227 2031	213227 2030	20	
213227 1831	213227 1830	18	
213227 1631	213227 1630	16	
213227 1431	213227 1430	14	
213227 1231	213227 1230	12	
213227 1031	213227 1030	10	
213227 0831	213227 0830	8	
オーダー番号 ORDER No		極数 CKT	MODEL NO

黒 BLACK	ナチュラル NATURAL	HOUSING COLOR	
213227 3471	213227 3470	34	213227 **7* (GOLD PLATING THICKNESS: 0.76 micro-meters MIN.
213227 3271	213227 3270	32	
213227 3071	213227 3070	30	
213227 2871	213227 2870	28	
213227 2671	213227 2670	26	
213227 2471	213227 2470	24	
213227 2271	213227 2270	22	
213227 2071	213227 2070	20	
213227 1871	213227 1870	18	
213227 1671	213227 1670	16	
213227 1471	213227 1470	14	
213227 1271	213227 1270	12	
213227 1071	213227 1070	10	
213227 0871	213227 0870	8	
オーダー番号 ORDER No		極数 CKT	MODEL NO

THIS DRAWING CONTAINS INFORMATION THAT IS PROPRIETARY TO MOLEX ELECTRONIC TECHNOLOGIES, LLC AND SHOULD NOT BE USED WITHOUT WRITTEN PERMISSION

DIMENSION UNITS	SCALE
mm	NTS

GENERAL TOLERANCES (UNLESS SPECIFIED)

ANGULAR TOL	± 3.0 °
4 PLACES	± 0.2
3 PLACES	± 0.2
2 PLACES	± 0.2
1 PLACE	± 0.2
0 PLACES	± 0.2

DRAFT WHERE APPLICABLE MUST REMAIN WITHIN DIMENSIONS

CURRENT REV DESC:

EC NO: 742719
DRWN: MIKEDA01 2023/06/23
CHK'D: SAKIYAMA 2023/06/23
APPR: AIDA 2023/06/23

INITIAL REVISION:
DRWN: MIKEDA01 2019/10/01
APPR: KOMURAKAMI 2019/11/20

molex

CLIK-MATE 1.5
DUAL ROW SMT VT TYPE GOLD PLATING

PRODUCT CUSTOMER DRAWING

DOCUMENT NUMBER	DOC TYPE	DOC PART	REVISION
2132270000-SD	PSD	000	D

THIRD ANGLE PROJECTION	DRAWING	SERIES	MATERIAL NUMBER	CUSTOMER	SHEET NUMBER
	A3-SIZE	213227	SEE CHART	GENERAL	6 OF 6

DOCUMENT STATUS	P1	RELEASE DATE	2023/06/23 10:36:44

FORMAT: master-lb-prod-A3
REVISION: J
DATE: 2020/01/14