LEXI-R10 series

LTE Cat 1bis modules

Data sheet



Abstract

Technical data sheet describing the u-blox LEXI-R10 series modules, a complete and cost-efficient solution offering multi-band LTE Cat 1bis data transmissions in the ultra-compact LEXI form factor.

UBX-23007594 - R11
C1-Public

Document information

Title	**LEXI-R10 series**	
Subtitle	LTE Cat 1bis modules	
Document type	Data sheet	
Document number	UBX-23007594	
Revision and date	R11	31-Jul-2024
Disclosure restriction	C1-Public	

Product status	Corresponding content status	
Functional sample	Draft	For functional testing. Revised and supplementary data will be published later.
In development / Prototype	Objective specification	Target values. Revised and supplementary data will be published later.
Engineering sample	Advance information	Data based on early testing. Revised and supplementary data will be published later.
Initial production	Early production information	Data from product verification. Revised and supplementary data may be published later.
Mass production / End of life	Production information	Document contains the final product specification.

This document applies to the following products:

Product name	Type number	Firmware version	Notification reference	Product status
LEXI-R10001D	LEXI-R10001D-01B-00	Modem: 01.05 Application: A00.01	UBXDOC-686885345-2100	Functional sample
LEXI-R10401D	LEXI-R10401D-00B-00	Modem: 01.05 Application: A00.02	UBXDOC-686885345-2099	Engineering sample
LEXI-R10801D	LEXI-R10801D-00B-00	Modem: 01.05 Application: A00.02	UBXDOC-686885345-2101	Initial production

u-blox or third parties may hold intellectual property rights in the products, names, logos and designs included in this document. Copying, reproduction, modification or disclosure to third parties of this document or any part thereof is only permitted with the express written permission of u-blox.
The information contained herein is provided “as is” and u-blox assumes no liability for its use. No warranty, either express or implied, is given, including but not limited to, with respect to the accuracy, correctness, reliability and fitness for a particular purpose of the information. This document may be revised by u-blox at any time without notice. For the most recent documents, visit www.u-blox.com.
Copyright © u-blox AG.

Contents

Document information **2**
Contents **3**
1 Functional description **5**
1.1 Overview 5
1.2 Block diagram 6
1.3 Product description 6
1.4 AT command support 7
1.5 Supported features 7
2 Interfaces **9**
2.1 Power management 9
2.1.1 Module supply input (VCC) 9
2.1.2 Generic digital interfaces supply output (V_INT) 9
2.2 Antenna interfaces 9
2.2.1 Antenna RF interface (ANT) 9
2.2.2 Antenna detection (ANT_DET) 9
2.3 System functions 10
2.3.1 Module power-on 10
2.3.2 Module power-off 10
2.3.3 Module reset 11
2.4 SIM 11
2.4.1 SIM interface 11
2.4.2 SIM detection 11
2.5 Serial communication 11
2.5.1 UART interfaces 11
2.5.2 USB interface 13
2.5.3 I2C interface 13
2.6 GPIO 13
2.7 Antenna dynamic tuner interface 14
2.8 Reserved pins (RSVD) 14
3 Pin definition **15**
3.1 Pin assignment 15
4 Electrical specifications **22**
4.1 Absolute maximum rating 22
4.1.1 Maximum ESD 22
4.2 Operating conditions 23
4.2.1 Operating temperature range 23
4.2.2 Thermal parameters 23
4.2.3 Supply/power pins 23
4.2.4 Current consumption 24
4.2.5 LTE RF characteristics 25

4.2.6 ANT_DET pin 26
4.2.7 PWR_ON pin 27
4.2.8 RESET_N pin 27
4.2.9 SIM pins 27
4.2.10 I2C pins 27
4.2.11 Generic Digital Interfaces pins 28
4.2.12 Always-on digital Interfaces pins 28
4.2.13 USB pins 28
4.3 Parameters for ATEX applications 29
5 Mechanical specifications 30
6 Qualification and approvals 31
6.1 Reliability tests 31
6.2 Approvals 31
7 Product handling & soldering 32
7.1 Packaging 32
7.1.1 Reels 32
7.1.2 Tapes 32
7.2 Moisture sensitivity levels 33
7.3 ESD precautions 33
7.4 Reflow soldering 33
8 Labeling and ordering information 34
8.1 Product labeling 34
8.2 Explanation of codes 34
8.3 Ordering information 35
Appendix 36
A Glossary 36
Related documentation 38
Revision history 39
Contact 39

1 Functional description

1.1 Overview

LEXI-R10 series are the world's smallest LTE Cat 1bis modules in the ultra-small LEXI LGA form factor (16 x 16 mm, 133-pin), featuring medium capacity data connectivity (up to 10 Mbit/s downlink, up to 5 Mbit/s uplink) with very low energy consumption.

Thanks to connectivity to ubiquitous LTE Cat 1 networks, LEXI-R10 series modules are ideally suited to a wide range of value-oriented applications that require medium data speed and superior coverage. Typical applications are asset tracking, telematics, healthcare, and wearables.

LEXI-R10 series modules support multi-band LTE radio access technology, and come in the following product variants to reduce logistics complexity:

- LEXI-R10001D data-only LTE Cat 1bis module for global use comes with a comprehensive set of supported bands and all relevant approvals. The module is available with an optional eSIM for cellular network connectivity.
- LEXI-R10401D data-only LTE Cat 1bis module provides an ideal solution for North America region, supporting all related relevant LTE bands, and coming with necessary regulatory, conformance and Mobile Network Operators approvals.
- LEXI-R10801D data-only LTE Cat 1bis module provides an ideal solution for Europe, Middle East, Africa, Brazil and Asia-Pacific regions, supporting all related relevant LTE bands, and coming with necessary regulatory approvals.

LEXI-R10 series modules offer data communications over an extended operating temperature range from –40 °C to +85 °C. They are qualified according to u-blox qualification policy based on the AEC-Q104 standard, for operation in harsh environments and in very compact designs.

Model	Regions	Radio Access Technology			Interfaces						Features																		Grade		
		LTE category	LTE FDD bands	LTE TDD bands	UARTs	USB	I2C	SIM	GPIOs	Digital audio (I2S)	Secure boot and updates	eSIM	Wi-Fi scan	PSM	eDRX	Embedded TCP/IP, UDP/IP	Embedded HTTP	Embedded TLS, DTLS	Embedded MQTT	Dual stack IPv4 / IPv6	SNTP	FW update via serial (FOAT)	FW update Over the Air (FOTA)	Backup/Restore	Antenna dynamic tuning	Antenna and SIM detection	Standard	Professional	Automotive
LEXI-R10001D	Global	1bis	1,2,3,4,5 7,8,12,13 20,25[□],28,66	34 38,39 40,41	●	●	○	●	●		●	□	●	●	●	●	●	●	●	●	●	●	●	●	●	●			●	
LEXI-R10401D	Americas	1bis	2,4,5 12,13,14 66,71		●	●	○	●	●		●		●	●	●	●	●	●	●	●	●	●	●	●	●	●			●	
LEXI-R10801D	EMEA APAC Brazil	1bis	1,3,5 7,8 20,28		●	●	○	●	●		●		●	●	●	●	●	●	●	●	●	●	●	●	●	●			●	

Table 1: LEXI-R10 series main features summary (● = supported, ○ = HW-ready, □ = with dedicated ordering code)

1.2 Block diagram

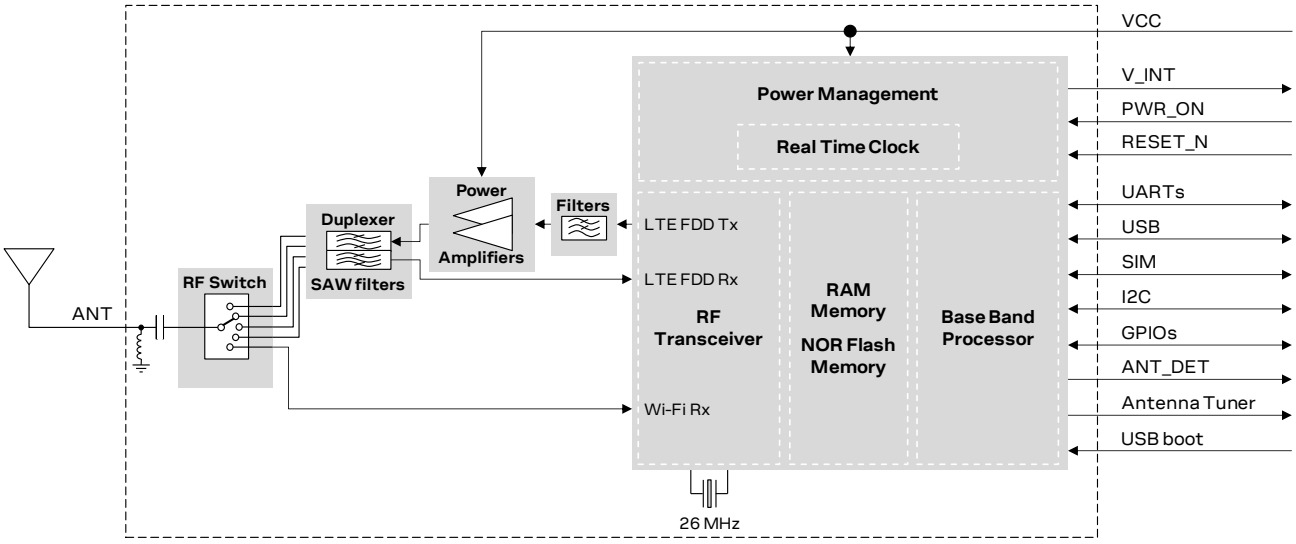

Figure 1: LEXI-R10 series block diagram

I2C interface is not supported by “00B” / “01B” initial product version of LEXI-R10 series modules.

1.3 Product description

Table 2 summarizes cellular radio access technologies characteristics and features of the modules, and Table 3 summarizes Wi-Fi receiver scan capabilities of the modules.

	LEXI-R10001D	LEXI-R10401D	LEXI-R10801D
Protocol stack	3GPP Release 14	3GPP Release 14	3GPP Release 14
Radio Access Technology	LTE Cat 1bis	LTE Cat 1bis	LTE Cat 1bis
Operating bands	LTE FDD band 1 (2100 MHz) LTE FDD band 2 (1900 MHz) LTE FDD band 3 (1800 MHz) LTE FDD band 4 (1700 MHz) LTE FDD band 5 (850 MHz) LTE FDD band 7 (2600 MHz) LTE FDD band 8 (900 MHz) LTE FDD band 12 (700 MHz) LTE FDD band 13 (700 MHz) LTE FDD band 20 (800 MHz) LTE FDD band 25 (1900 MHz)[1] LTE FDD band 28 (700 MHz) LTE FDD band 66 (1700 MHz) LTE TDD band 34 (2000 MHz) LTE TDD band 38 (2600 MHz) LTE TDD band 39 (1900 MHz) LTE TDD band 40 (2300 MHz) LTE TDD band 41 (2600 MHz)	LTE FDD band 2 (1900 MHz) LTE FDD band 4 (1700 MHz) LTE FDD band 5 (850 MHz) LTE FDD band 12 (700 MHz) LTE FDD band 13 (700 MHz) LTE FDD band 14 (700 MHz) LTE FDD band 66 (1700 MHz) LTE FDD band 71 (600 MHz)	LTE FDD band 1 (2100 MHz) LTE FDD band 3 (1800 MHz) LTE FDD band 5 (850 MHz) LTE FDD band 7 (2600 MHz) LTE FDD band 8 (900 MHz) LTE FDD band 20 (800 MHz) LTE FDD band 28 (700 MHz)
Power class	LTE Power Class 3 (23 dBm)	LTE Power Class 3 (23 dBm)	LTE Power Class 3 (23 dBm)
Data rate	LTE category 1bis: up to 10.3 Mbit/s Up-Link, up to 5.2 Mbit/s Down-Link	LTE category 1bis: up to 10.3 Mbit/s Up-Link, up to 5.2 Mbit/s Down-Link	LTE category 1bis: up to 10.3 Mbit/s Up-Link, up to 5.2 Mbit/s Down-Link

Table 2: LEXI-R10 series cellular main characteristics

[1] with dedicated ordering code only.

	LEXI-R10 series
IEEE standard	802.11 b/g/n with DSSS beacon
Operating band	2.4 GHz, all 14 channels
Channel bandwidth	20 MHz
Modulation	BPSK or QPSK

Table 3: LEXI-R10 series Wi-Fi receiver main characteristics

1.4 AT command support

The LEXI-R10 series module supports AT commands according to the 3GPP standards TS 27.007 [5], TS 27.005 [6], TS 27.010 [7], and the u-blox AT commands extension.

☞ For the complete list of AT commands and their description, see the AT commands manual [1].

1.5 Supported features

Table 4 lists the main features supported by LEXI-R10 series modules.

Feature	Description
Device security	Hardware-based security functions of the chipset are used to provide: • Secure boot: guarantees software authenticity and integrity • Secure update: supervise the secure delivery of the correct FW to the module
Wi-Fi scan	Wi-Fi 2.4 GHz RF signals receiving capability (see Table 3) shared with LTE Cat 1bis RF signals receiving and transmitting capability over the same **ANT** RF port of the modules. The Wi-Fi receiver scan functionality consists in detecting available Wi-Fi networks using the antenna connected to the **ANT** RF port of the modules. The Wi-Fi subsystem inside the modules consists in a receiver radio circuitry only. No Wi-Fi transmitter radio circuitry is implemented. The Wi-Fi scan feature can be activated by dedicated AT command, retrieving the information about Wi-Fi access points in area, to determine device location.
CellLocate®	Enables the estimation of device position based on the parameters of the mobile network cells visible to the specific device based on the CellLocate® database. CellLocate® is available via a set of AT commands for CellLocate® service configuration and position request.
Antenna dynamic tuning	Real-time control of an external antenna matching IC via two dedicated pins of the module according to the LTE band used by the module.
Embedded TCP and UDP stack	Embedded TCP/IP and UDP/IP stack including direct link mode for TCP and UDP sockets. Sockets can be set in Direct Link mode to establish a transparent end-to-end communication with an already connected TCP or UDP socket via the serial interface.
HTTP, HTTPS (v1.1)	Hyper-Text Transfer Protocol as well as Secure Hyper-Text Transfer Protocol (SSL encryption) functionalities are supported via AT commands.
MQTT (v3.1.1)	Embedded Message Queuing Telemetry Transport (MQTT) publish-subscribe messaging protocols designed for lightweight M2M communications over TCP. These allow one-to-one, one-to-many and many-to-one communications over a TCP connection.
TLS (v1.0, v1.1, v1.2) and DTLS (v1.2)	Transport Layer Security (TLS) provides security for HTTP, MQTT and TCP communications. Embedded Datagram Transport Layer Security (DTLS) provides security for LwM2M.
Network indication	GPIO configured to indicate the network status: registered home network, registered roaming, data call enabled, no service. The feature can be enabled through the +UGPIOC AT command.
Antenna detection	The **ANT_DET** pin provides antenna presence detection capability, evaluating the resistance from the **ANT** pin to GND by means of an external antenna detection circuit implemented on the application board. The feature can be enabled through the +UANTR AT command.
GSMA SGP.01 / SGP.02 M2M ready	Bearer Independent Protocol (BIP) for over-the-air SIM provisioning.
Dual stack IPv4/IPv6	Capability to move between IPv4 and dual stack network infrastructures. IPv4 and IPv6 addresses can be used.

Feature	Description
SNTP	Simple Network Time Protocol to synchronize the local time with the Universal Time Coordinated (UTC) via an SNTP server.
Firmware update Over AT commands (FOAT)	Module firmware update over AT command interface.
Firmware update Over The Air (FOTA)	Module firmware update over the air interface using HTTP.
Low power idle mode	The low power idle mode allows reduction of the module current consumption while the module periodically monitors the signal received from the network in discontinuous reception. Once the feature is enabled through the dedicated +UPSV AT command, the module enters the ultra-low power deep-sleep mode whenever possible, reducing the current consumption to the minimum possible value in the microampere range (see Table 14).
Power Saving Mode (PSM)	The ultra-low power PSM mode, defined by 3GPP specifications, allows further reduction of the module current consumption compared to the idle mode, keeping the module registered with the network, but temporarily not reachable for mobile services.
eDRX	The idle mode extended discontinuous reception, defined by 3GPP specifications, allows the module to decrease the frequency of the periodical monitoring of the signal received from the network. This in turn leads to a reduction in the module consumption while maintaining a perpetual connection with the base station.
cDRX	The connected mode discontinuous reception, defined by 3GPP specifications, allows reduction of the consumption and LTE network use during periods of inactivity. Both Long DRX Cycle and Short DRX cycle are supported for LTE Connected Discontinuous Reception, reducing consumption and LTE network use during periods of inactivity.
Backup and restore	This feature allows the modules to autonomously restore the key data stored in the NOR flash memory integrated in the module using the last backup data stored in the memory itself.

Table 4: Main features supported by LEXI-R10 series modules

2 Interfaces

2.1 Power management

2.1.1 Module supply input (VCC)

LEXI-R10 series modules must be supplied through the **VCC** pins by a proper external DC power supply providing a nominal voltage within the normal operating range (see Table 12). Voltage must be stable, because during operation the current drawn from **VCC** may vary significantly, based on the power consumption profile of the LTE radio access technology.

The internal baseband Power Management Unit, fed from the **VCC** supply input pins as illustrated in Figure 1, integrates voltage regulators generating all internal supply voltages needed by the module for its intended operations, including supply voltage for:

- the generic digital interfaces, which supply voltage is available at the **V_INT** output pin (see 2.1.2),
- the digital pins in the "always-on" supply voltage domain, which supply voltage is not available on a pin of the module, and which is always enabled when the module is switched on, even when the module is in the ultra-low power deep-sleep mode,
- the SIM interface, which supply voltage is available at the **VSIM** output pin (see 2.4.1),
- other internal sub-systems, as for example the internal flash memory, which supply voltage is not available on a pin of the module.

It is important that the system power supply circuit can withstand with adequate safe design margin the maximum current during transmission at maximum power level (see Table 14).

2.1.2 Generic digital interfaces supply output (V_INT)

LEXI-R10 series modules provide a 1.8 V supply rail output on the **V_INT** pin, which is internally generated by an LDO linear regulator when the module is switched on and outside the ultra-low power deep-sleep mode that can be entered after having enabled the feature by AT+UPSV command.

The **V_INT** voltage domain is used internally to supply the generic digital interfaces of the module, as:

- the UART interfaces (see 2.5.1),
- the I2C interface (see 2.5.3),
- the antenna dynamic tuner interface (see 2.7),
- some of the GPIOs (see 2.6).

The **V_INT** supply output can be used in place of an external discrete regulator.

☞ It is recommended to provide test point directly connected to **V_INT** pin for diagnostic purposes.

2.2 Antenna interfaces

2.2.1 Antenna RF interface (ANT)

The **ANT** pin is the RF input / output of LEXI-R10 series modules, designed with 50 Ω characteristic impedance, available to connect an external antenna for the transmission and the reception of LTE RF signals, and for the reception of Wi-Fi RF signals.

2.2.2 Antenna detection (ANT_DET)

The **ANT_DET** pin is an analog to digital converter (ADC) input of LEXI-R10 series modules, making available the optional capability of detecting an external antenna, in case the radiating element of the external antenna integrates a proper diagnostic shunt resistor.

2.3 System functions

2.3.1 Module power-on

When the LEXI-R10 series modules are not powered, the modules' switch on can be triggered by:

- Applying a voltage at the **VCC** module supply input within the operating range (see Table 12), and then forcing a low level at the **PWR_ON** input pin, which is normally set high by an internal pull-up, for a valid time period (see section 4.2.7, module switch on).

When the LEXI-R10 series modules are in power-off mode (i.e. switched off, but with a valid voltage present at the **VCC** module supply input within the operating range reported in Table 12), the modules' switch on can be triggered by:

- Forcing a low level at the **PWR_ON** input pin, which is normally set high by an internal pull-up, for a valid time period (see section 4.2.7, module switch on).

When the LEXI-R10 series modules are in ultra-low power deep-sleep mode, the modules' wake-up can be triggered by:

- Forcing a low level at the **PWR_ON** input pin, which is normally set high by an internal pull-up, for a valid time period (see section 4.2.7, module wake-up from deep-sleep mode), or
- In +UPSV=5 condition, applying a rising edge at the **GPIO3** or **GPIO6** input pin, which are in the "always-on" supply domain, appropriately configured by AT+UGPIOC command (see section 2.6, module wake-up and low power mode control).
- Using USB interface with +UUSBSLPCONF=0 condition, via USB resume procedure.

The **PWR_ON** line is intended to be driven by open drain, open collector or contact switch.

☞ It is recommended to provide accessible test point directly connected to the **PWR_ON** pin, for FW update or diagnostic purposes.

2.3.2 Module power-off

The proper graceful switch off procedure of the LEXI-R10 series modules, with storage of the current parameter settings in module's non-volatile memory and a clean network detach, can be triggered by:

- AT+CPWROFF command, or
- Forcing a low level at the **PWR_ON** input pin, for a valid time period (see section 4.2.7, module graceful switch off).

A faster emergency switch-off procedure of the modules, with storage of current parameter settings in the module's non-volatile memory, but without a clean network detach, can be triggered by:

- AT+CFUN=10 command, or
- Forcing a rising edge at the **GPIO3** or **GPIO6** input pin, which are in the "always-on" supply domain, properly configured by AT+UGPIOC command (see section 2.6, module faster power-off).

The fastest memory-safe emergency switch off procedure of the LEXI-R10 series modules, inhibiting further operations in the non-volatile flash memory, without executing the storage of the current parameter settings, and without executing a clean network detach, can be triggered by:

- AT+CFUN=11 command, or
- Forcing a rising edge at the **GPIO3** or **GPIO6** input pin, which are in the "always-on" supply domain, properly configured by AT+UGPIOC command (see section 2.6, module memory-safe power-off).

An abrupt under-voltage shutdown occurs on the LEXI-R10 series modules when the **VCC** supply is removed. If this event occurs, it is not possible to store the current parameter settings in the module's non-volatile memory or to perform a clean network detach.

2.3.3 Module reset

The graceful reset of LEXI-R10 series modules, which stores the current parameter settings in module's non-volatile memory and performs a clean network detach before the reboot of the module, can be triggered by:

- AT+CFUN=16 command

An abrupt emergency reset is triggered on LEXI-R10 series modules, with shutdown followed by a reboot of the internal power management unit, without storage of current parameter settings and without a clean network detach, when:

- A low level is applied on the **RESET_N** pin for a valid time period (see section 4.2.8, module abrupt emergency reset).

The **RESET_N** line is intended to be driven by open drain, open collector or contact switch.

☞ It is recommended to provide accessible test point directly connected to the **RESET_N** pin, for FW update or diagnostic purposes.

2.4 SIM

2.4.1 SIM interface

LEXI-R10 series modules provide an interface on the **VSIM**, **SIM_IO**, **SIM_CLK**, **SIM_RST** pins to connect an external SIM card/chip. External 1.8 V and 3.0 V SIM card/chip types are supported. Activation and deactivation are implemented according to the ISO-IEC 7816-3 specifications.

2.4.2 SIM detection

The **GPIO6** pin of LEXI-R10 series modules is a 1.8 V digital pin in the "always-on" supply domain, which can be configured as an external interrupt to detect the SIM card presence (see section 2.6). This detection of an external SIM card presence is an optional feature, not necessarily required to be implemented by properly connecting the line to the mechanical switch of an external SIM card holder.

For more details see the LEXI-R10 series system integration manual [2] and the LEXI-R10 series AT commands manual [1], +UGPIOC and +UDCONF=50 AT commands.

2.5 Serial communication

The LEXI-R10 series module provides the following serial communication interfaces:

- UART interfaces, in the **V_INT** supply domain (see section 2.5.1)
- USB 2.0 interface, in dedicated supply domain (see section 2.5.2)
- I2C bus compatible interface, in the **V_INT** supply domain (see section 2.5.3)

2.5.1 UART interfaces

2.5.1.1 Main UART interface (UART)

LEXI-R10 series modules include a main primary UART interface (UART) in the **V_INT** supply domain, with settings configurable by dedicated AT commands, supporting:

- AT commands and data communication
- Multiplexer protocol functionality (see 2.5.1.3)
- FW update by means of FOAT
- FW update by means of dedicated u-blox EasyFlash tool

Some of the characteristics of the main primary UART interface (UART) are the following:

- 8-wire serial port with RS-232 functionality conforming to ITU-T V.24 recommendation [9], with CMOS compatible signal levels (0 V for low data bit / ON state, 1.8 V for high data bit / OFF state)
  - Data lines (**RXD** as data output, **TXD** as data input)
  - HW flow control lines (**CTS** as flow control output, **RTS** as flow control input)
  - Modem status and control lines (**DTR** input, **DSR** output, **DCD** output, **RI** output)[2]
- The default baud rate is 115'200 bit/s, which can be changed by dedicated AT+IPR command to lower baud rates and to higher baud rates up to 3 Mbit/s
- The default frame format is 8N1 (8 data bits, no parity, 1 stop bit)

☞ It is recommended to provide accessible test points directly connected to the main primary UART interface **RXD** data output and **TXD** data input pins, for FW update purposes, in case the USB interface is used for the communication with the host application processor.

2.5.1.2 Auxiliary UART interface (AUX UART)

LEXI-R10 series modules include an auxiliary second UART interface (AUX UART) in the **V_INT** supply domain, which can be enabled as alternative function, in a mutually exclusive way, over the **DTR**, **DSR**, **DCD** and **RI** pins of the main primary UART interface, with settings configurable by dedicated AT commands, supporting:

- AT commands and data communication
- FW update by means of FOAT
- Diagnostic trace logging

Some of the characteristics of the auxiliary second UART interface (AUX UART) are the following:

- 4-wire serial port with RS-232 functionality conforming to ITU-T V.24 recommendation [9], with CMOS compatible signal levels (0 V for low data bit / ON state, 1.8 V for high data bit / OFF state)
  - Data lines (**DCD** as data output, **DTR** as data input)
  - HW flow control lines (**RI** as flow control output, **DSR** as flow control input)
- The default baud rate is 115'200 bit/s, configurable up to 921'600 bit/s, with higher baud rates up to 3 Mbit/s considered for future FW release
- The default frame format is 8N1 (8 data bits, no parity, 1 stop bit)

☞ It is recommended to provide accessible test points directly connected to the auxiliary UART interface **DCD** data output and **DTR** data input pins, for diagnostic purposes, in case the USB interface is used for the communication with the host application processor.

2.5.1.3 Multiplexer protocol

The modules include multiplexer functionality as per 3GPP TS 27.010 [7] on the main primary UART interface physical link. This is a data link protocol usings HDLC-like framing between the module (DCE) and the application processor (DTE), emulating several virtual connection channels on the single main primary UART physical interface to access the module concurrently.

Dedicated virtual channel for multiplexer control, plus dedicated virtual channels for AT commands and data connection are available.

For further details about the use of multiplexer, see the Mux implementation application note [4].

[2] **DTR**, **DSR**, **DCD** and **RI** pins can be alternatively configured, in a mutually exclusive way, as secondary auxiliary UART interface. The Ring Indicator (RI) function can be alternatively configured over GPIO (see section 2.6).

2.5.2 USB interface

LEXI-R10 series modules include a USB High-Speed 2.0 interface with maximum 480 Mbit/s data rate according to the Universal Serial Bus specification revision 2.0 [10]. The module itself acts as a USB device and can be connected to any compatible USB host. The USB interface include multiple virtual serial ports to support various functions such as:

- AT commands and data communication
- FW update by means of FOAT
- FW update by means of dedicated u-blox EasyFlash tool
- Diagnostic trace logging
- Ethernet over USB

The USB interface includes the following lines:

- the **USB_D+** / **USB_D-** lines, carrying the USB data and signaling
- the **USB_BOOT** input pin to enable the FW update over the USB interface.

☞ The **USB_BOOT** input pin must be set high, at the 1.8 V voltage level of the **V_INT** supply output, to enable the FW update over the USB interface at the boot of the module, using the dedicated tool to execute the FW update. Only if the **USB_BOOT** pin is left floating (unconnected), or it is set low (grounded), the LEXI-R10 series modules can boot in normal operating mode.

☞ It is recommended to provide accessible test points directly connected to the **USB_D+** and **USB_D-** pins, as well as to the **USB_BOOT** pin, for FW update and for diagnostic purposes, in case the UART interfaces are used for the communication with the host application processor.

2.5.3 I2C interface

☞ I2C interface is not supported by “00B” / “01B” initial product version of LEXI-R10 series modules.

LEXI-R10 series modules include a 1.8V I2C-bus compatible interface over the **SDA** and **SCL** pins, in the **V_INT** supply domain, with the LEXI-R10 series module acting as an I2C host to communicate with external I2C devices in accordance with the I2C bus specifications [11].

2.6 GPIO

LEXI-R10 series modules include ten GPIO pins that can be configured to provide custom functions as summarized in Table 5. Note that the GPIO pins are in two different supply domains:

- the **GPIO1**, **GPIO5**, **GPIO7**, **GPIO8**, **GPIO9** and **GPIO10** pins are in the **V_INT** supply domain as the other generic digital interfaces (the UART interfaces, the I2C interface, and the antenna dynamic tuner interface), meaning that their function is not available when the module is in ultra-low power deep-sleep mode, with the generic digital interface supply (**V_INT**) switched off,
- the **GPIO2**, **GPIO3**, **GPIO4** and **GPIO6** pins are in the “always-on” supply domain, meaning that their function is available also when the module is in ultra-low power deep-sleep mode, with the generic digital interface supply (**V_INT**) switched off.

For further details, see the LEXI-R10 series system integration manual [2] and the GPIO section of the LEXI-R10 series AT commands manual [1].

Function	Description	Default GPIO	Configurable GPIOs
Output	Output to set the high or the low digital level	--	All
Input	Input to sense high or low digital level	--	All
Network status indication	Output indicating cellular network status: registered, data transmission, no service	--	GPIO1, GPIO2, GPIO4, GPIO5, GPIO7, GPIO8, GPIO9, GPIO10

Function	Description	Default GPIO	Configurable GPIOs
Module status indication	Output indicating module status: low when switched off, high when in deep-sleep, idle, active, or connected mode	--	GPIO2, GPIO4
SIM card detection	Input for external SIM card physical presence detection, to optionally enable / disable the SIM interface in case the SIM hot insertion function is enabled by AT+UDCONF=50	--	GPIO6
Ring indicator	Output providing events indicator (as the UART RI line)	--	GPIO1, GPIO2, GPIO4, GPIO5, GPIO7, GPIO8, GPIO9, GPIO10
Module wake-up and low power mode control	Input to wake-up and control the low power mode of the module once enabled by AT+UPSV command	--	GPIO3, GPIO6
Faster power-off	Input with internal pull-down to trigger a faster emergency shutdown (as AT+CFUN=10) by applying a rising edge	--	GPIO3, GPIO6
Memory-safe power-off	Input with internal pull-down to trigger the fastest memory-safe emergency shutdown (as AT+CFUN=11) by applying a rising edge	--	GPIO3, GPIO6
Pin disabled	Tri-state with an internal active pull-up enabled	GPIO1	GPIO1
	Tri-state with an internal active pull-down enabled	GPIO2, GPIO3, GPIO4, GPIO5, GPIO6, GPIO7, GPIO8, GPIO9, GPIO10	GPIO2, GPIO3, GPIO4, GPIO5, GPIO6, GPIO7, GPIO8, GPIO9, GPIO10

Table 5: GPIO custom functions configuration

2.7 Antenna dynamic tuner interface

LEXI-R10 series modules include two 1.8 V digital output pins (**RFCTRL1** and **RFCTRL2**), in the **V_INT** supply domain, that can optionally be used to control in real time an external antenna tuning IC, as the two pins change their output value dynamically according to the specific current LTE band in use by the module. Table 6 illustrates the default factory-programmed configuration that can be changed by dedicated AT command.

RFCTRL1	RFCTRL2	LEXI-R10401D frequency band in use	LEXI-R10801D frequency band in use
0	0	B2, B4, B12, B13, B14, B66, Wi-Fi	B1, B3, B7, B28, Wi-Fi
0	1	B5	B5, B20
1	0	-	B8
1	1	B71	-

Table 6: LEXI-R10 series modules antenna dynamic tuning truth table (default factory-programmed configuration)

2.8 Reserved pins (RSVD)

LEXI-R10 series modules include pins reserved for future use, marked as **RSVD**, which can all be left unconnected on the application board.

3 Pin definition

3.1 Pin assignment

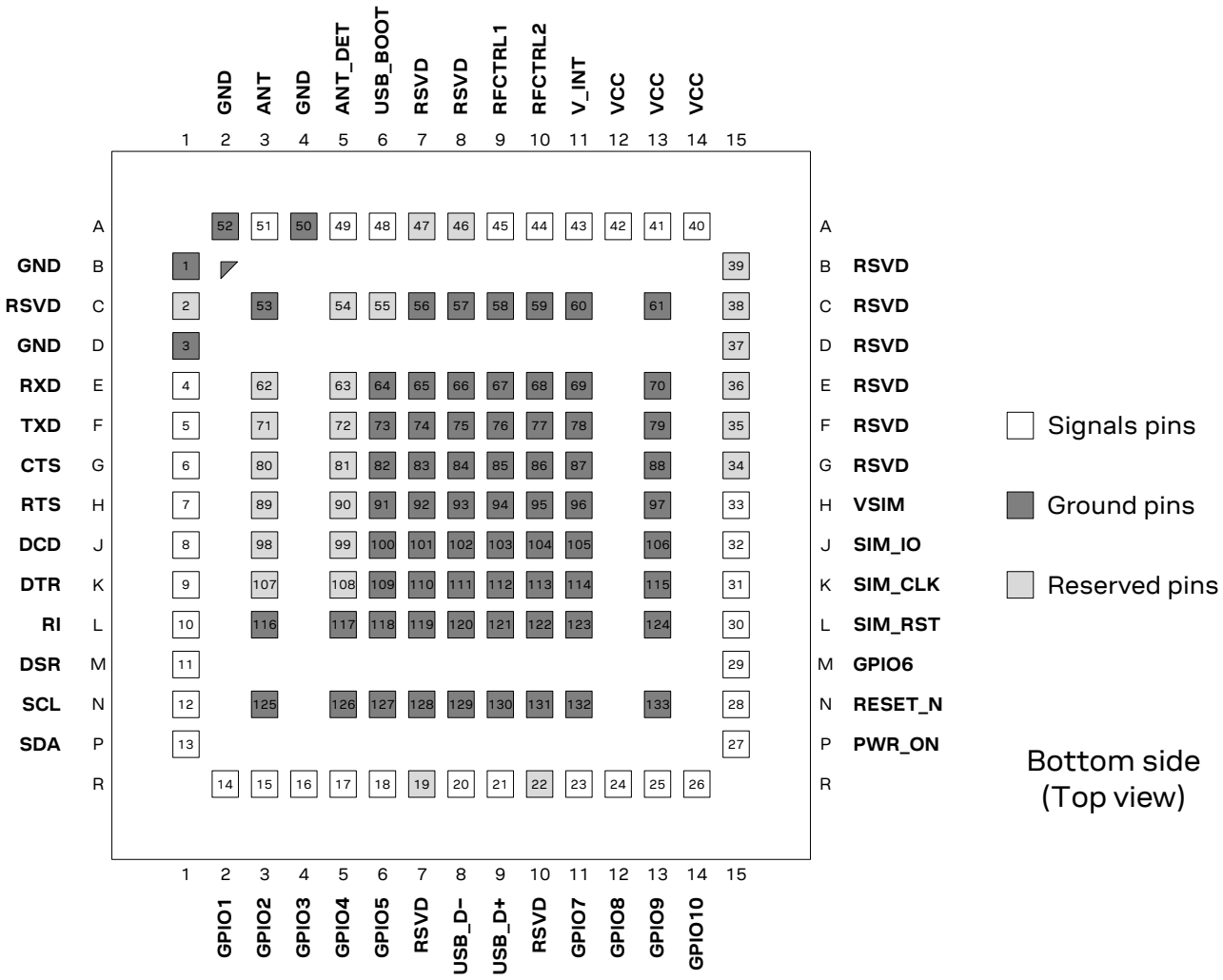

Figure 2: LEXI-R10 series module pin assignment (top view)

ID	No	Name	Power domain	I/O	Description	Remarks
A2	52	GND	-	N/A	Ground	All the GND pins must be connected to ground.
A3	51	ANT	-	I/O	RF antenna I/O	RF input/output for the external antenna. 50 Ω nominal impedance. See section 2.2.1 and 4.2.5 for details.
A4	50	GND	-	N/A	Ground	All the GND pins must be connected to ground.
A5	49	ANT_DET	ADC	I	Antenna detection	Antenna presence detection function. See section 2.2.2 for functional description. See section 4.2.6 for detailed electrical specs.
A6	48	USB_BOOT	GDI	I	Force USB boot	Input to force FW update over USB. Active high. See section 2.5.2 for functional description. See section 4.2.11 for detailed electrical specs. Provide test point for FW update purposes, in case main UART interface is used by the host processor.
A7	47	RSVD	-	N/A	Reserved pin	Leave unconnected.

ID	No	Name	Power domain	I/O	Description	Remarks
A8	46	RSVD	-	N/A	Reserved pin	Leave unconnected.
A9	45	RFCTRL1	GDI	O	RF GPIO for antenna tuning	Digital output to optionally control an antenna tuning IC. Push-pull output type. See section 2.7 for functional description. See section 4.2.11 for detailed electrical specs.
A10	44	RFCTRL2	GDI	O	RF GPIO for antenna tuning	Digital output to optionally control an antenna tuning IC. Push-pull output type. See section 2.7 for functional description. See section 4.2.11 for detailed electrical specs.
A11	43	V_INT	-	O	Generic Digital Interfaces supply output	V_INT = 1.8 V (typical) supply generated by the module when is switched on, outside ultra-low power deep sleep mode. See section 2.1.2 for functional description. See section 4.2.3 for detailed electrical specs. Provide test point for diagnostic purposes.
A12	42	VCC	-	I	Module supply input	All VCC pins must be connected to external supply. See section 2.1.1 for functional description. See section 4.2.3 and 4.2.4 for detailed electrical specs.
A13	41	VCC	-	I	Module supply input	All VCC pins must be connected to external supply. See section 2.1.1 for functional description. See section 4.2.3 and 4.2.4 for detailed electrical specs.
A14	40	VCC	-	I	Module supply input	All VCC pins must be connected to external supply. See section 2.1.1 for functional description. See section 4.2.3 and 4.2.4 for detailed electrical specs.
B1	1	GND	-	N/A	Ground	All the GND pins must be connected to ground.
B15	39	RSVD	-	N/A	Reserved pin	Leave unconnected.
C1	2	RSVD	-	N/A	Reserved pin	Leave unconnected.
C3	53	GND	-	N/A	Ground	All the GND pins must be connected to ground.
C5	54	RSVD	-	N/A	Reserved pin	Leave unconnected.
C6	55	RSVD	-	N/A	Reserved pin	Leave unconnected.
C7	56	GND	-	N/A	Ground	All the GND pins must be connected to ground.
C8	57	GND	-	N/A	Ground	All the GND pins must be connected to ground.
C9	58	GND	-	N/A	Ground	All the GND pins must be connected to ground.
C10	59	GND	-	N/A	Ground	All the GND pins must be connected to ground.
C11	60	GND	-	N/A	Ground	All the GND pins must be connected to ground.
C13	61	GND	-	N/A	Ground	All the GND pins must be connected to ground.
C15	38	RSVD	-	N/A	Reserved pin	Leave unconnected.
D1	3	GND	-	N/A	Ground	All the GND pins must be connected to ground.
D15	37	RSVD	-	N/A	Reserved pin	Leave unconnected.
E1	4	RXD	GDI	O	UART data output	Circuit 104 in ITU-T V.24 (RxD data output, push-pull, idle high, active low). See section 2.5.1 for functional description. See section 4.2.11 for detailed electrical specs. Provide test point for FW update and diagnostic purposes, if the USB interface is used by the host processor.
E3	62	RSVD	-	N/A	Reserved pin	Leave unconnected.
E5	63	RSVD	-	N/A	Reserved pin	Leave unconnected.
E6	64	GND	-	N/A	Ground	All the GND pins must be connected to ground.
E7	65	GND	-	N/A	Ground	All the GND pins must be connected to ground.
E8	66	GND	-	N/A	Ground	All the GND pins must be connected to ground.
E9	67	GND	-	N/A	Ground	All the GND pins must be connected to ground.

ID	No	Name	Power domain	I/O	Description	Remarks
E10	68	GND	-	N/A	Ground	All the GND pins must be connected to ground.
E11	69	GND	-	N/A	Ground	All the GND pins must be connected to ground.
E13	70	GND	-	N/A	Ground	All the GND pins must be connected to ground.
E15	36	RSVD	-	N/A	Reserved pin	Leave unconnected.
F1	5	TXD	GDI	I	UART data input	Circuit 103 in ITU-T V.24 (TxD data input, idle high, active low, with internal active pull-up enabled). See section 2.5.1 for functional description. See section 4.2.11 for detailed electrical specs. Provide test point for FW update and diagnostic purposes, if the USB interface is used by the host processor.
F3	71	RSVD	-	N/A	Reserved pin	Leave unconnected.
F5	72	RSVD	-	N/A	Reserved pin	Leave unconnected.
F6	73	GND	-	N/A	Ground	All the GND pins must be connected to ground.
F7	74	GND	-	N/A	Ground	All the GND pins must be connected to ground.
F8	75	GND	-	N/A	Ground	All the GND pins must be connected to ground.
F9	76	GND	-	N/A	Ground	All the GND pins must be connected to ground.
F10	77	GND	-	N/A	Ground	All the GND pins must be connected to ground.
F11	78	GND	-	N/A	Ground	All the GND pins must be connected to ground.
F13	79	GND	-	N/A	Ground	All the GND pins must be connected to ground.
F15	35	RSVD	-	N/A	Reserved pin	Leave unconnected.
G1	6	CTS	GDI	O	UART clear to send	Circuit 106 in ITU-T V.24 (CTS hardware flow control output, push-pull, idle high, active low). See section 2.5.1 for functional description. See section 4.2.11 for detailed electrical specs.
G3	80	RSVD	-	N/A	Reserved pin	Leave unconnected.
G5	81	RSVD	-	N/A	Reserved pin	Leave unconnected.
G6	82	GND	-	N/A	Ground	All the GND pins must be connected to ground.
G7	83	GND	-	N/A	Ground	All the GND pins must be connected to ground.
G8	84	GND	-	N/A	Ground	All the GND pins must be connected to ground.
G9	85	GND	-	N/A	Ground	All the GND pins must be connected to ground.
G10	86	GND	-	N/A	Ground	All the GND pins must be connected to ground.
G11	87	GND	-	N/A	Ground	All the GND pins must be connected to ground.
G13	88	GND	-	N/A	Ground	All the GND pins must be connected to ground.
G15	34	RSVD	-	N/A	Reserved pin	Leave unconnected.
H1	7	RTS	GDI	I	UART request to send	Circuit 105 in ITU-T V.24 (RTS flow control input, idle high, active low, with internal active pull-up enabled). See section 2.5.1 for functional description. See section 4.2.11 for detailed electrical specs.
H3	89	RSVD	-	N/A	Reserved pin	Leave unconnected.
H5	90	RSVD	-	N/A	Reserved pin	Leave unconnected.
H6	91	GND	-	N/A	Ground	All the GND pins must be connected to ground.
H7	92	GND	-	N/A	Ground	All the GND pins must be connected to ground.
H8	93	GND	-	N/A	Ground	All the GND pins must be connected to ground.
H9	94	GND	-	N/A	Ground	All the GND pins must be connected to ground.
H10	95	GND	-	N/A	Ground	All the GND pins must be connected to ground.
H11	96	GND	-	N/A	Ground	All the GND pins must be connected to ground.
H13	97	GND	-	N/A	Ground	All the GND pins must be connected to ground.

ID	No	Name	Power domain	I/O	Description	Remarks
H15	33	VSIM	-	O	SIM supply output	VSIM = 1.8 V (typical) or 3 V (typical) supply generated by the module according to the external SIM card type, when it is switched on, after the internal boot sequence, outside the ultra-low power deep sleep mode. See section 2.4.1 for functional description. See section 4.2.9 for detailed electrical specs.
J1	8	DCD	GDI	O / O	UART data carrier detect / AUX UART data output	Circuit 109 in ITU-T V.24 (DCD output, push-pull, idle high, active low), alternatively settable as Second Auxiliary UART RXD (data output, push-pull, idle high, active low). See section 2.5.1 for functional description. See section 4.2.11 for detailed electrical specs. Provide test point for diagnostic purposes, if the USB and main UART interfaces are used by the host processor.
J3	98	RSVD	-	N/A	Reserved pin	Leave unconnected.
J5	99	RSVD	-	N/A	Reserved pin	Leave unconnected.
J6	100	GND	-	N/A	Ground	All the GND pins must be connected to ground.
J7	101	GND	-	N/A	Ground	All the GND pins must be connected to ground.
J8	102	GND	-	N/A	Ground	All the GND pins must be connected to ground.
J9	103	GND	-	N/A	Ground	All the GND pins must be connected to ground.
J10	104	GND	-	N/A	Ground	All the GND pins must be connected to ground.
J11	105	GND	-	N/A	Ground	All the GND pins must be connected to ground.
J13	106	GND	-	N/A	Ground	All the GND pins must be connected to ground.
J15	32	SIM_IO	SIM	I/O	SIM data	Internal pull-up resistor to VSIM. See section 2.4.1 for functional description. See section 4.2.9 for detailed electrical specs.
K1	9	DTR	GDI	I / I	UART data terminal ready / AUX UART data input	Circuit 108/2 in ITU-T V. 24 (DTR input, idle high, active low, with internal active pull-up enabled), alternatively settable as second auxiliary UART TXD (data input, idle high, active low, with internal active pull-up enabled). See section 2.5.1 for functional description. See section 4.2.11 for detailed electrical specs. Provide test point for diagnostic purposes, if the USB and main UART interfaces are used by the host processor.
K3	107	RSVD	-	N/A	Reserved pin	Leave unconnected.
K5	108	RSVD	-	N/A	Reserved pin	Leave unconnected.
K6	109	GND	-	N/A	Ground	All the GND pins must be connected to ground.
K7	110	GND	-	N/A	Ground	All the GND pins must be connected to ground.
K8	111	GND	-	N/A	Ground	All the GND pins must be connected to ground.
K9	112	GND	-	N/A	Ground	All the GND pins must be connected to ground.
K10	113	GND	-	N/A	Ground	All the GND pins must be connected to ground.
K11	114	GND	-	N/A	Ground	All the GND pins must be connected to ground.
K13	115	GND	-	N/A	Ground	All the GND pins must be connected to ground.
K15	31	SIM_CLK	SIM	O	SIM clock	See section 2.4.1 for functional description. See section 4.2.9 for detailed electrical specs.
L1	10	RI	GDI	O / O	UART ring indicator / AUX UART clear to send	Circuit 125 in ITU-T V.24 (RI output, push-pull, idle high, active low), alternatively configurable as second auxiliary UART CTS (HW flow control output, push-pull, idle high, active low). See section 2.5.1 for functional description. See section 4.2.11 for detailed electrical specs.
L3	116	GND	-	N/A	Ground	All the GND pins must be connected to ground.

ID	No	Name	Power domain	I/O	Description	Remarks
L5	117	GND	-	N/A	Ground	All the GND pins must be connected to ground.
L6	118	GND	-	N/A	Ground	All the GND pins must be connected to ground.
L7	119	GND	-	N/A	Ground	All the GND pins must be connected to ground.
L8	120	GND	-	N/A	Ground	All the GND pins must be connected to ground.
L9	121	GND	-	N/A	Ground	All the GND pins must be connected to ground.
L10	122	GND	-	N/A	Ground	All the GND pins must be connected to ground.
L11	123	GND	-	N/A	Ground	All the GND pins must be connected to ground.
L13	124	GND	-	N/A	Ground	All the GND pins must be connected to ground.
L15	30	SIM_RST	SIM	O	SIM reset	See section 2.4.1 for functional description. See section 4.2.9 for detailed electrical specs.
M1	11	DSR	GDI	O / I	UART data set ready / AUX UART request to send	Circuit 107 in ITU-T V.24 (DSR output, push-pull, idle high, active low), alternatively configurable as second auxiliary UART RTS (HW flow control input, idle high, active low, with internal active pull-up enabled). See section 2.5.1 for functional description. See section 4.2.11 for detailed electrical specs.
M15	29	GPIO6	AOI	I/O	Always-on GPIO	Configurable always-on GPIO, supporting module wake-up, and SIM card detection functions, aside others. Internal pull-down can be set when configured as input. Push-pull output type with 20 µA driver strength. See sections 2.3.1 / 2.4.2 / 2.6 for functional description. See section 4.2.12 for detailed electrical specs.
N1	12	SCL	I2C	O	I2C bus clock line	I2C is not supported by “00B” / “01B” product version. Fixed open drain. Internal pull-up to V_INT. Idle high, active low. See section 2.5.3 for functional description. See section 4.2.10 for detailed electrical specs.
N3	125	GND	-	N/A	Ground	All the GND pins must be connected to ground.
N5	126	GND	-	N/A	Ground	All the GND pins must be connected to ground.
N6	127	GND	-	N/A	Ground	All the GND pins must be connected to ground.
N7	128	GND	-	N/A	Ground	All the GND pins must be connected to ground.
N8	129	GND	-	N/A	Ground	All the GND pins must be connected to ground.
N9	130	GND	-	N/A	Ground	All the GND pins must be connected to ground.
N10	131	GND	-	N/A	Ground	All the GND pins must be connected to ground.
N11	132	GND	-	N/A	Ground	All the GND pins must be connected to ground.
N13	133	GND	-	N/A	Ground	All the GND pins must be connected to ground.
N15	28	RESET_N	ERS	I	Reset input	Internal active pull-up. Active low. See section 2.3.3 for functional description. See section 4.2.8 for detailed electrical specs. Provide test point for diagnostic purposes.
P1	13	SDA	I2C	I/O	I2C bus data line	I2C is not supported by the “00B” / “01B” product version. Fixed open drain. Internal pull-up to V_INT. Idle high, active low. See section 2.5.3 for functional description. See section 4.2.10 for detailed electrical specs.
P15	27	PWR_ON	POS	I	Power on/off input	Internal active pull-up. Active low. See section 2.3.1 and 2.3.2 for functional description. See section 4.2.7 for detailed electrical specs. Provide test point for FW update or diagnostic purposes.

ID	No	Name	Power domain	I/O	Description	Remarks
R2	14	GPIO1	GDI	I/O	GPIO	Configurable GPIO. Internal pull-up can be set when configured as input.Push-pull output type with 10 mA driver strength. See section 2.6 for functional description. See section 4.2.11 for detailed electrical specs.
R3	15	GPIO2	AOI	I/O	Always-on GPIO	Configurable always-on GPIO, supporting module status indication, aside other functions. Internal pull-down can be set when configured as input. Push-pull output type with 5 mA driver strength. See section 2.6 for functional description. See section 4.2.12 for detailed electrical specs.
R4	16	GPIO3	AOI	I/O	Always-on GPIO	Configurable always-on GPIO, supporting module wake-up from deep-sleep mode function, aside other functions. Internal pull-down can be set when configured as input. Push-pull output type with 20 µA driver strength. See section 2.3.1 / 2.6 for functional description. See section 4.2.12 for detailed electrical specs.
R5	17	GPIO4	AOI	I/O	Always-on GPIO	Configurable always-on GPIO, supporting module status indication, aside other functions. Internal pull-down can be set when configured as input. Push-pull output type with 5 mA driver strength. See section 2.6 for functional description. See section 4.2.12 for detailed electrical specs.
R6	18	GPIO5	GDI	I/O	GPIO	Configurable GPIO. Internal pull-down can be set when configured as input. Push-pull output type with 10 mA driver strength. See section 2.6 for functional description. See section 4.2.11 for detailed electrical specs.
R7	19	RSVD	-	N/A	Reserved pin	Leave unconnected.
R8	20	USB_D-	USB	I/O	USB Data Line D-	90 Ω nominal differential impedance. Pull-up, pull-down and series resistors, as per USB specs [10], are part of the pin driver and shall not be provided externally. See section 2.5.2 for functional description. See section 4.2.13 for detailed electrical specs. Provide test point for FW update and diagnostic purposes, if the UART interfaces are used by the host processor.
R9	21	USB_D+	USB	I/O	USB Data Line D+	90 Ω nominal differential impedance. Pull-up, pull-down and series resistors, as per USB specs [10], are part of the pin driver and shall not be provided externally. See section 2.5.2 for functional description. See section 4.2.13 for detailed electrical specs. Provide test point for FW update and diagnostic purposes, if the UART interfaces are used by the host processor.
R10	22	RSVD	-	N/A	Reserved pin	Leave unconnected.
R11	23	GPIO7	GDI	I/O	GPIO	Configurable GPIO. Internal pull-down can be set when configured as input. Push-pull output type with 10 mA driver strength. See section 2.6 for functional description. See section 4.2.11 for detailed electrical specs

ID	No	Name	Power domain	I/O	Description	Remarks
R12	24	GPIO8	GDI	I/O	GPIO	Configurable GPIO. Internal pull-down can be set when configured as input. Push-pull output type with 10 mA driver strength. See section 2.6 for functional description. See section 4.2.11 for detailed electrical specs
R13	25	GPIO9	GDI	I/O	GPIO	Configurable GPIO. Internal pull-down can be set when configured as input. Push-pull output type with 10 mA driver strength. See section 2.6 for functional description. See section 4.2.11 for detailed electrical specs
R14	26	GPIO10	GDI	I/O	GPIO	Configurable GPIO. Internal pull-down can be set when configured as input. Push-pull output type with 10 mA driver strength. See section 2.6 for functional description. See section 4.2.11 for detailed electrical specs

Table 7: LEXI-R10 series pin-out

☞ For more information about the pin-out, see the LEXI-R10 series system integration manual [2].

☞ See appendix A for an explanation of the abbreviations and terms used.

4 Electrical specifications

⚠ Stressing the device above one or more of the ratings listed in the Absolute Maximum Rating section may cause permanent damage. These are stress ratings only. Operating the module at these or at any conditions other than those specified in the Operating Conditions sections (section 4.2) of the specification should be avoided. Exposure to Absolute Maximum Rating conditions for extended periods may affect device reliability.

☞ Electrical characteristics are defined according to the verification on a representative number of samples or according to the simulation.

☞ Where application information is given, it is advisory only and does not form part of the specification.

4.1 Absolute maximum rating

☞ Limiting values given below are in accordance with Absolute Maximum Rating System (IEC 134).

Symbol	Description	Condition	Min.	Max.	Unit
VCC	Module supply voltage	Input DC voltage at VCC pins	-0.3	5.0	V
USB	USB D+/D- pins	Input DC voltage at USB_D+ and USB_D- pins	-0.3	3.6	V
GDI	Generic digital interfaces	Input DC voltage at generic digital interfaces pins	-0.3	2.0	V
AOI	Always-on digital interfaces	Input DC voltage at always-on digital interfaces pins	-0.3	2.0	V
I2C	I2C interface	Input DC voltage at I2C interface pins	-0.3	2.0	V
SIM	SIM interface	Input DC voltage at SIM interface pins	-0.3	3.3	V
ERS	External reset signal	Input DC voltage at RESET_N pin	–0.3	2.0	V
POS	Power-on input signal	Input DC voltage at PWR_ON pin	-0.3	2.3	V
ADC	Antenna detection input	Input DC voltage at ANT_DET pin	-0.3	2.0	V
P_RF	RF power	Input RF power at ANT pin		3	dBm
Rho_ANT	Antenna ruggedness	Output RF load mismatch ruggedness at ANT pin		10:1	VSWR
Tstg	Storage temperature		-40	+85	°C

Table 8: Absolute maximum ratings

⚠ The product is not protected against overvoltage or reversed voltages. If necessary, voltage spikes exceeding the voltage specifications given in the table above, must be limited to values within the specified boundaries by using appropriate protection devices.

4.1.1 Maximum ESD

Parameter	Min	Max	Unit	Remarks
ESD sensitivity for all pins		1000	V	Human Body Model according to JS-001-2017
		500	V	Charged Device Model according to JS-002-2018

Table 9: Maximum ESD ratings

⚠ u-blox cellular modules are electrostatic sensitive devices and require special precautions when handling. See section 7.3 for ESD handling instructions.

4.2 Operating conditions

Unless otherwise indicated, all operating condition specifications are at an ambient temperature of +25 °C.

Operation beyond the operating conditions is not recommended and extended exposure beyond them may affect device reliability.

4.2.1 Operating temperature range

Parameter	Min.	Typ.	Max.	Unit	Remarks
Normal operating temperature	–20	+25	+65	°C	Operating within 3GPP / ETSI specifications
Extended operating temperature	–40		+85	°C	Operating with possible slight deviation in RF performance outside normal operating range

Table 10: Environmental conditions

4.2.2 Thermal parameters

Symbol	Parameter	Typ.	Unit	Remarks
Ψ_{M-A}	Module-to-Ambient thermal parameter	11	°C/W	Thermal characterization parameter $\Psi_{M-A} = (T_M - T_A) / P_H$ proportional to the temperature difference between the internal temperature of the module (T_M) and the ambient temperature (T_A), produced by the module heat power dissipation (P_H), with the module mounted on a board with roughly 9 x 8 cm size, with still air condition
Ψ_{M-C}	Module-to-Case thermal parameter	6	°C/W	Thermal characterization parameter $\Psi_{M-C} = (T_M - T_C) / P_H$ proportional to the temperature difference between the internal temperature of the module (T_M) and the ambient temperature (T_C), produced by the module heat power dissipation (P_H), with the module mounted on a board with roughly 9 x 8 cm size, with a robust aluminum heat-sink and forced air ventilation condition, reducing case-to-ambient thermal resistance as much as possible

Table 11: Thermal characterization parameters of the modules

4.2.3 Supply/power pins

Symbol	Parameter	Min.	Typical	Max.	Unit
VCC	Module supply normal operating input voltage [3]	3.3	3.8	4.5	V

Table 12: Input characteristics of the Supply/Power pins

Symbol	Parameter	Min.	Typical	Max.	Unit
VSIM	SIM supply output voltage with 1.8 V external SIM		1.8		V
	SIM supply output voltage with 3.0 V external SIM		3.0		V
V_INT	Generic Digital Interfaces supply output voltage		1.8		V
	Generic Digital Interfaces supply output current capability			70	mA

Table 13: Output characteristics of the Supply/Power pins

[3] Operating within 3GPP / ETSI specifications.

4.2.4 Current consumption

Mode	Condition	Tx power	Min.	Typical [4]	Max. [5]	Unit
Power-off mode	Averaged value, Module switched off	--		0.5		µA
Deep-sleep mode using UART [6]	Averaged floor current, Hibernate (maximum deep-sleep mode)	--		2		µA
	Averaged floor current, Sleep-2 (medium deep-sleep mode)	--		5		µA
	Averaged floor current, Sleep-1 (minimum deep-sleep mode)	--		35		µA
Deep-sleep mode using USB [7]	Averaged floor current, Sleep-1 (minimum deep-sleep mode)	--		400		µA
Low power mode using UART [6]	Averaged value, AT+UPSV≠0, eDRX = 655.36 s, PTW = 20.48 s, DRX = 2.56 s	--		10		µA
	Averaged value, AT+UPSV≠0, eDRX = 81.92 s, PTW = 2.56 s, DRX = 2.56 s	--		15		µA
	Averaged value, AT+UPSV≠0, DRX = 2.56 s	--		150		µA
Low power mode using USB [7]	Averaged value, AT+UPSV≠0, eDRX = 655.36 s, PTW = 20.48 s, DRX = 2.56 s	--		420		µA
	Averaged value, AT+UPSV≠0, eDRX = 81.92 s, PTW = 2.56 s, DRX = 2.56 s	--		435		µA
	Averaged value, AT+UPSV≠0, DRX = 2.56 s	--		565		µA
Active mode using UART [6]	Averaged value, AT+UPSV=0, DRX = 2.56 s	--		4		mA
Active mode using USB [8]	Averaged value, AT+UPSV=0, DRX = 2.56 s	--		25		mA
Connected mode	Averaged value along LTE data Tx/Rx	Minimum		110		mA
		Maximum		540	900	mA

Table 14: Indicative VCC current consumption of the LEXI-R10 series modules [9]

[4] Typical values with a matched antenna
[5] Maximum values with a mismatched antenna
[6] Typical values with USB not connected, disabled, and set to allow maximum deep-sleep mode.
[7] Typical values with USB connected and suspended.
[8] Typical values with USB connected and not suspended.
[9] Indicative current consumption values with VCC = 3.8 V

4.2.5 LTE RF characteristics

The LTE Cat 1bis bands supported by LEXI-R10 series modules are defined in Table 2, while Table 15 describes the frequency ranges for each LTE band as per 3GPP TS 36.521-1 [8].

Parameter		Min.	Max.	Unit	Remarks
Frequency range FDD band 71 (600 MHz)	Uplink	663	698	MHz	Module transmits
	Downlink	617	652	MHz	Module receives
Frequency range FDD band 12 (700 MHz)	Uplink	699	716	MHz	Module transmits
	Downlink	729	746	MHz	Module receives
Frequency range FDD band 28 (700 MHz)	Uplink	703	748	MHz	Module transmits
	Downlink	758	803	MHz	Module receives
Frequency range FDD band 13 (700 MHz)	Uplink	777	787	MHz	Module transmits
	Downlink	746	756	MHz	Module receives
Frequency range FDD band 14 (700 MHz)	Uplink	788	798	MHz	Module transmits
	Downlink	758	768	MHz	Module receives
Frequency range FDD band 20 (800 MHz)	Uplink	832	862	MHz	Module transmits
	Downlink	791	821	MHz	Module receives
Frequency range FDD band 5 (850 MHz)	Uplink	824	849	MHz	Module transmits
	Downlink	869	894	MHz	Module receives
Frequency range FDD band 8 (900 MHz)	Uplink	880	915	MHz	Module transmits
	Downlink	925	960	MHz	Module receives
Frequency range FDD band 4 (1700 MHz)	Uplink	1710	1755	MHz	Module transmits
	Downlink	2110	2155	MHz	Module receives
Frequency range FDD band 66 (1700 MHz)	Uplink	1710	1780	MHz	Module transmits
	Downlink	2110	2200	MHz	Module receives
Frequency range FDD band 3 (1800 MHz)	Uplink	1710	1785	MHz	Module transmits
	Downlink	1805	1880	MHz	Module receives
Frequency range FDD band 2 (1900 MHz)	Uplink	1850	1910	MHz	Module transmits
	Downlink	1930	1990	MHz	Module receives
Frequency range FDD band 25 (1900 MHz)	Uplink	1850	1915	MHz	Module transmits
	Downlink	1930	1995	MHz	Module receives
Frequency range TDD band 39 (1900 MHz)	Uplink	1880	1920	MHz	Module transmits
	Downlink	1880	1920	MHz	Module receives
Frequency range TDD band 34 (2000 MHz)	Uplink	2010	2025	MHz	Module transmits
	Downlink	2010	2025	MHz	Module receives
Frequency range FDD band 1 (2100 MHz)	Uplink	1920	1980	MHz	Module transmits
	Downlink	2110	2170	MHz	Module receives
Frequency range TDD band 40 (2300 MHz)	Uplink	2300	2400	MHz	Module transmits
	Downlink	2300	2400	MHz	Module receives
Frequency range TDD band 38 (2600 MHz)	Uplink	2570	2620	MHz	Module transmits
	Downlink	2570	2620	MHz	Module receives
Frequency range TDD band 41 (2600 MHz)	Uplink	2496	2690	MHz	Module transmits
	Downlink	2496	2690	MHz	Module receives
Frequency range FDD band 7 (2600 MHz)	Uplink	2500	2570	MHz	Module transmits
	Downlink	2620	2690	MHz	Module receives

Table 15: LTE operating RF frequency bands

LEXI-R10 series modules include a UE Power Class 3 LTE transmitter (see Table 2), with Tx power and characteristics according to 3GPP TS 36.521-1 [8], and one LTE Cat 1bis receiver compliant with the 3GPP TS 36.521-1 [8], with LTE conducted receiver sensitivity performance described in Table 16.

Parameter	Min.	Typical	Max.	Unit	Remarks
Receiver input sensitivity Band 71 (600 MHz)		–101		dBm	Channel bandwidth = 5 MHz
		–95		dBm	Channel bandwidth = 20 MHz
Receiver input sensitivity Band 12 (700 MHz)		–108		dBm	Channel bandwidth = 1.4 MHz
		–102		dBm	Channel bandwidth = 5 MHz
		–99		dBm	Channel bandwidth = 10 MHz
Receiver input sensitivity Band 28 (700 MHz)		–104		dBm	Channel bandwidth = 3 MHz
		–102		dBm	Channel bandwidth = 5 MHz
		–96		dBm	Channel bandwidth = 20 MHz
Receiver input sensitivity Band 13 (700 MHz)		–102		dBm	Channel bandwidth = 5 MHz
		–100		dBm	Channel bandwidth = 10 MHz
Receiver input sensitivity Band 14 (700 MHz)		–102		dBm	Channel bandwidth = 5 MHz
		–100		dBm	Channel bandwidth = 10 MHz
Receiver input sensitivity Band 20 (800 MHz)		–102		dBm	Channel bandwidth = 5 MHz
		–96		dBm	Channel bandwidth = 20 MHz
Receiver input sensitivity Band 5 (850 MHz)		–108		dBm	Channel bandwidth = 1.4 MHz
		–102		dBm	Channel bandwidth = 5 MHz
		–99		dBm	Channel bandwidth = 10 MHz
Receiver input sensitivity Band 8 (900 MHz)		–108		dBm	Channel bandwidth = 1.4 MHz
		–102		dBm	Channel bandwidth = 5 MHz
		–100		dBm	Channel bandwidth = 10 MHz
Receiver input sensitivity Band 4 / 66 (1700 MHz)		–108		dBm	Channel bandwidth = 1.4 MHz
		–102		dBm	Channel bandwidth = 5 MHz
		–96		dBm	Channel bandwidth = 20 MHz
Receiver input sensitivity Band 3 (1800 MHz)		–107		dBm	Channel bandwidth = 1.4 MHz
		–101		dBm	Channel bandwidth = 5 MHz
		–96		dBm	Channel bandwidth = 20 MHz
Receiver input sensitivity Band 2 (1900 MHz)		–106		dBm	Channel bandwidth = 1.4 MHz
		–100		dBm	Channel bandwidth = 5 MHz
		–95		dBm	Channel bandwidth = 20 MHz
Receiver input sensitivity Band 1 (2100 MHz)		–101		dBm	Channel bandwidth = 5 MHz
		–96		dBm	Channel bandwidth = 20 MHz
Receiver input sensitivity Band 7 (2600 MHz)		–100		dBm	Channel bandwidth = 5 MHz
		–94		dBm	Channel bandwidth = 20 MHz

Condition: 50 Ω, throughput > 95%, QPSK modulation, other settings as per clause 7.3EB of 3GPP TS 36.521-1 [8]

Table 16: LTE receiver sensitivity performance

4.2.6 ANT_DET pin

Parameter	Min.	Typical	Max.	Unit	Remarks
Output DC current pulse value		80		µA	Triggered by AT+UANTR command
Output DC current pulse time length		10.5		ms	

Table 17: ANT_DET pin characteristics

4.2.7 PWR_ON pin

Parameter	Min.	Typical	Max.	Unit	Remarks
Internal supply for PWR_ON Input Signal		2.0		V	The PWR_ON input is pulled up to an internal voltage rail
Low-level input	-0.30		0.36	V	
Pull-up resistance		120		kΩ	Integrated pull-up to an internal always-on voltage rail
PWR_ON low time	0.005		2000	ms	Low time to trigger module switch on from power off mode
	0.005		2000	ms	Low time to trigger module wake-up from deep sleep mode
	2		20	s	Low time to trigger module graceful switch off

Table 18: PWR_ON pin characteristics

4.2.8 RESET_N pin

Parameter	Min.	Typical	Max.	Unit	Remarks
Internal supply for RESET_N Input Signal		1.1		V	The RESET_N input is pulled up to an internal voltage rail
Low-level input	-0.30		0.36	V	
Pull-up resistance		100		kΩ	Integrated pull-up to an internal always-on voltage rail
RESET_N low time	0.05			ms	Low time to trigger module abrupt emergency reset

Table 19: RESET_N pin characteristics

4.2.9 SIM pins

The SIM pins are a dedicated interface to the external SIM card/chip. The electrical characteristics fulfill the regulatory specification requirements. The values in Table 20 are for information only.

Parameter	Min.	Typ.	Max.	Unit	Remarks
VSIM supply output		1.8		V	VSIM, with external 1.8 V SIM type
		3.0		V	VSIM, with external 3.0 V SIM type
Low-level input	-0.30		0.2*VSIM	V	
High-level input	0.7*VSIM		VSIM+0.3	V	
Low-level output		0		V	
High-level output		VSIM		V	
Internal pull-up resistor on SIM_IO		4.7		kΩ	Internal pull-up to VSIM supply
Clock frequency on SIM_CLK		3.25		MHz	

Table 20: SIM pins characteristics

4.2.10 I2C pins

I2C lines (**SCL** and **SDA**) are compliant to the I2C-bus standard mode specification. See the I2C-bus specification [11] for detailed electrical characteristics.

Parameter	Min	Typical	Max	Unit	Remarks
Internal supply for I2C domain		1.8		V	Digital I/O Interfaces supply (V_INT)
Low-level input	-0.3		0.4	V	
High-level input	1.3		2.0	V	
Low-level output		0.0		V	
Internal pull-up resistance		4.7		kΩ	

Table 21: I2C pins characteristics

4.2.11 Generic Digital Interfaces pins

Parameter	Min	Typical	Max	Unit	Remarks
Internal supply for GDI domain		1.8		V	Digital I/O Interfaces supply (V_INT)
Low-level input	-0.3		0.4	V	
High-level input	1.3		2.0	V	
Low-level output		0.0		V	
High-level output		1.8		V	
Internal pull-up resistance	117		331	kΩ	Internal active pull-up, when enabled
Internal pull-down resistance	91		291	kΩ	Internal active pull-down, when enabled

Table 22: GDI pins characteristics

4.2.12 Always-on digital Interfaces pins

Parameter	Min	Typical	Max	Unit	Remarks
Internal supply for AOI domain		1.8		V	Always-on digital Interfaces internal rail
Low-level input	-0.3		0.4	V	
High-level input	1.3		2.0	V	
Low-level output		0.0		V	
High-level output		1.8		V	
Internal pull-up resistance	117		331	kΩ	Internal active pull-up, when enabled
Internal pull-down resistance	91		291	kΩ	Internal active pull-down, when enabled

Table 23: AOI pins characteristics

4.2.13 USB pins

USB data lines (**USB_D+** / **USB_D–**) are compliant with the USB 2.0 High-Speed specification. See the Universal Serial Bus specification revision 2.0 [10] for detailed electrical characteristics. The values in Table 24 related to USB 2.0 high-speed physical layer specifications are for information only.

Parameter	Min.	Typical	Max.	Unit	Remarks
High-speed squelch detection threshold (input differential signal amplitude)	100		150	mV	
High speed disconnect detection threshold (input differential signal amplitude)	525		625	mV	
High-speed data signaling input common mode voltage range	–50		500	mV	
High-speed idle output level	–10		10	mV	
High-speed data signaling output high level	360		440	mV	
High-speed data signaling output low level	–10		10	mV	
Chirp J level (output differential voltage)	700		1100	mV	
Chirp K level (output differential voltage)	–900		–500	mV	

Table 24: USB pins characteristics

4.3 Parameters for ATEX applications

This section provides useful parameters and information to integrate LEXI-R10 series modules in applications intended for use in areas with potentially explosive atmospheres (ATEX), including:

- Total internal capacitance and inductance of the modules (see Table 25)
- Maximum RF output power at the antenna (**ANT**) pin of the modules (see Table 26)

☞ For any device integrating the LEXI-R10 series modules and intended for use in potentially explosive atmospheres, check the detailed requisites on the pertinent normative for the application, as for example the IEC 60079-0 [12], IEC 60079-11 [13], and IEC 60079-26 [14] standards. The requirements must be fulfilled according to the exact applicable standards.

☞ The certification of the application device that integrates a LEXI-R10 series module and the compliance of the application device with all the applicable certification schemes, directives and standards required for use in potentially explosive atmospheres are under the sole responsibility of the application device manufacturer.

Table 25 describes the maximum total internal capacitance and the maximum total internal inductance, considering internal parts tolerance, of the LEXI-R10 series modules.

Module	Parameter	Description	Value	Unit
LEXI-R10401D	Ci	Maximum total internal capacitance	64	µF
	Li	Maximum total internal inductance	0.8	µH
LEXI-R10801D	Ci	Maximum total internal capacitance	64	µF
	Li	Maximum total internal inductance	0.8	µH

Table 25: LEXI-R10 series maximum total internal capacitance and maximum total internal inductance

Table 26 describes the maximum RF output power transmitted by LEXI-R10 series modules from the antenna (**ANT**) pin as Power Class 3 User Equipment for the LTE bands.

Module	Parameter	Description	Value	Unit
All	ANT Pout	Maximum RF output power from ANT pin	24	dBm

Table 26: LEXI-R10 series maximum RF output power

☞ LEXI-R10 series modules do not contain internal blocks that increase the input voltage (such as step-up, duplicators, or boosters) except for the antenna (**ANT**) pin, for which the maximum RF output power shown in Table 26.

5 Mechanical specifications

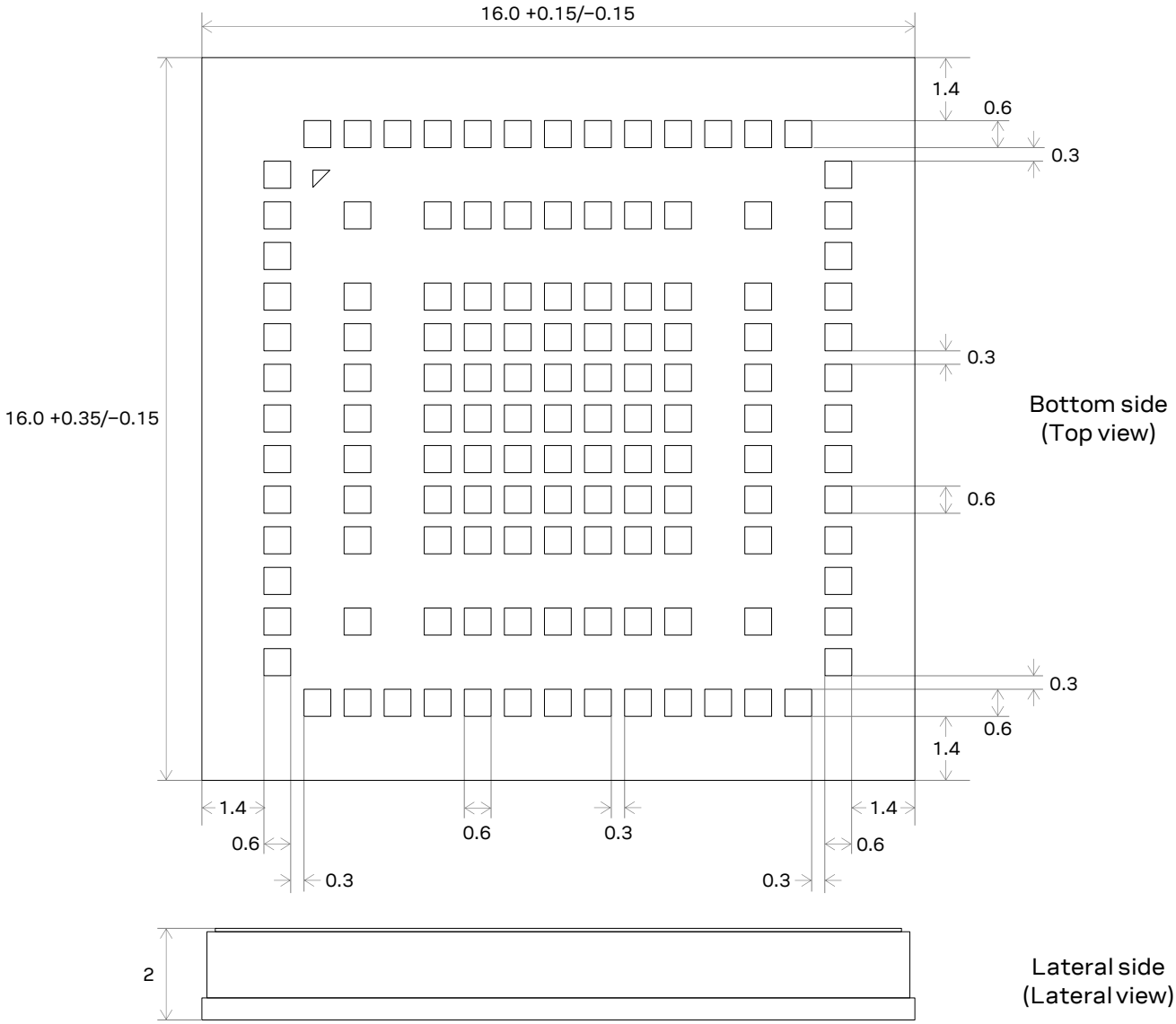

Figure 3: LEXI-R10 series dimensions, typical values [mm]

Actual geometries of the pads may depend on related implementation of the solder resist mask openings and the underlying copper layer.

The weight of a LEXI-R10 series module is 1.0 g typical.

6 Qualification and approvals

6.1 Reliability tests

Reliability tests for LEXI-R10 series modules are executed according to u-blox qualification policy, based on AEC-Q104 standard.

6.2 Approvals

LEXI-R10 series modules comply with the Directive 2011/65/EU of the European Parliament and the Council on the Restriction of Use of certain Hazardous Substances in Electrical and Electronic Equipment (EU RoHS 2) and its amendment Directive (EU) 2015/863 (EU RoHS 3).

LEXI-R10 series modules are RoHS 3 compliant.

No natural rubbers, hygroscopic materials, or materials containing asbestos are employed.

Table 27 summarizes the main approvals achieved or planned for LEXI-R10 series modules.

Certification	LEXI-R10001D	LEXI-R10401D	LEXI-R10801D
PTCRB	•	•	
GCF	•	•	
CE Europe	•		•
FCC United Sates	•	•	
ISED Canada	•	•	
NCC Taiwan	•		•
ACMA RCM Australia	•		•
ANATEL Brazil			•
GITEKI Japan	•		
AT&T with FirstNet		•	
Verizon		•	

Table 27: LEXI-R10 series main certification approvals summary

☞ For guidelines and notices about compliance with certification approvals requirements integrating the LEXI-R10 series modules in the end-device, see the LEXI-R10 series system integration manual [2].

☞ For the complete list of achieved or planned approvals, and for specific details on all country, conformance and network operators' certifications available for all LEXI-R10 series module ordering numbers, including related certificates of compliancy, please contact your nearest u-blox office or sales representative.

7 Product handling & soldering

7.1 Packaging

LEXI-R10 series modules are delivered as hermetically sealed, reeled tapes to enable efficient production, production lot set-up and tear-down. For more information about packaging, see the u-blox package information user guide [3].

7.1.1 Reels

LEXI-R10 series modules are deliverable in quantities of 500 pieces on a reel. The modules are delivered using reel type A4 described in the u-blox package information user guide [3].

Quantities of less than 500 pieces are also available. Contact u-blox for more information.

7.1.2 Tapes

LEXI-R10 series modules are delivered on the tape illustrated in Figure 5, while Figure 4 shows the position and the orientation of the modules on the tape.

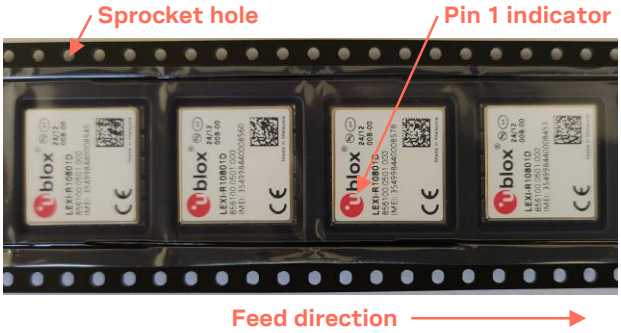

Figure 4: Orientation of LEXI-R10 series modules on tape

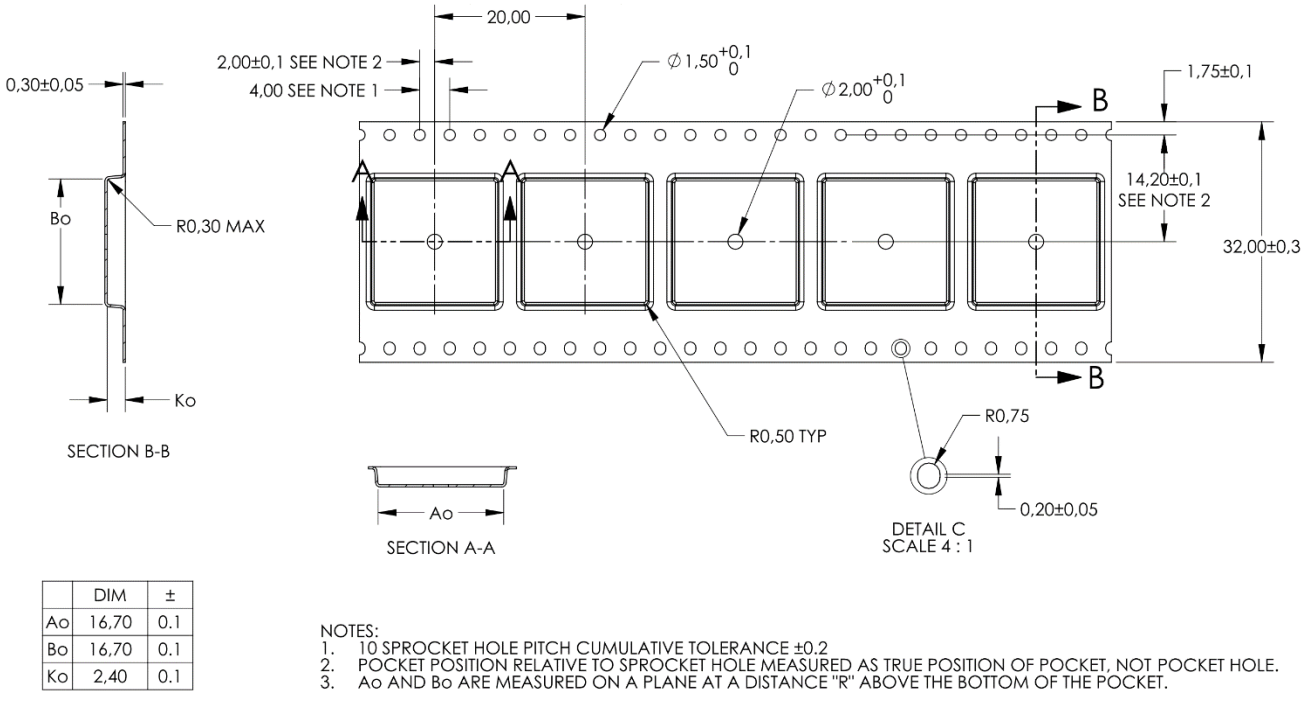

	DIM	±
Ao	16,70	0.1
Bo	16,70	0.1
Ko	2,40	0.1

Figure 5: LEXI-R10 series modules tape

7.2 Moisture sensitivity levels

⚠ LEXI-R10 series modules are moisture sensitive devices (MSD) in accordance to the related IPC/JEDEC specifications.

The Moisture Sensitivity Level (MSL) relates to the packaging and handling precautions required. LEXI-R10 series modules are rated at MSL level 4. For more information regarding moisture sensitivity levels, labeling, storage and drying, see the u-blox package information user guide [3].

☞ For the MSL standard, see IPC/JEDEC J-STD-020 (can be downloaded from www.jedec.org).

7.3 ESD precautions

⚠ LEXI-R10 series modules contain highly sensitive electronic circuitry and are Electrostatic Sensitive Devices (ESD). Handling LEXI-R10 series modules without proper ESD protection may destroy or damage them permanently.



⚠ Ensure ESD precautions are implemented during handling of the module.

Electrostatic discharge (ESD) is the sudden and momentary electric current that flows between two objects at different electrical potentials caused by direct contact or induced by an electrostatic field. The term is usually used in the electronics and other industries to describe momentary unwanted currents that may cause damage to electronic equipment.

Table 9 details the maximum ESD ratings of the LEXI-R10 series modules.

Proper ESD handling and packaging procedures must be applied throughout the processing, handling and operation of any application that incorporates LEXI-R10 series modules.

ESD precautions should be appropriately implemented on the application board where the module is mounted.

⚠ Failure to observe these precautions can result in severe damage to the device!

7.4 Reflow soldering

Reflow profiles are to be selected according to u-blox recommendations, as illustrated in details in the system integration manual [2].

⚠ Failure to observe these recommendations can result in severe damage to the device!

8 Labeling and ordering information

8.1 Product labeling

The labels of LEXI-R10 series modules include important product information, as described in this section. Figure 6 provides illustrative examples of LEXI-R10 series modules' labels, which include for example: the u-blox logo (acting also a pin 1 indicator), production date, Pb-free marking, product type number, IMEI number, certification info, and production country of the module.

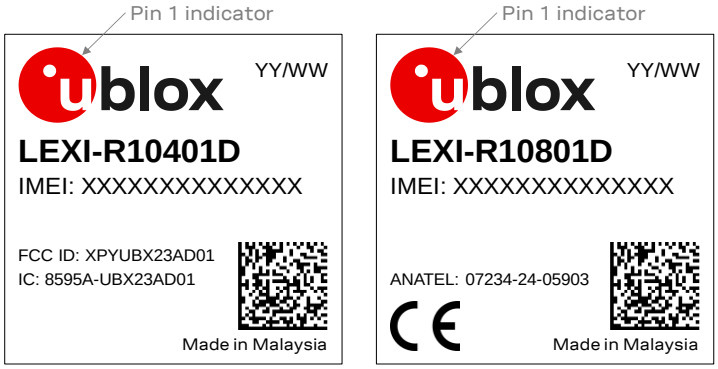

Figure 6: Illustrative examples of LEXI-R10 series modules' labels

8.2 Explanation of codes

Three different product code formats are used. The **Product name** is used in documentation such as this data sheet and identifies all the u-blox products, independent of packaging and quality grade. The **Ordering code** includes options and quality, while the **Type number** includes the hardware and firmware versions. Table 28 details these 3 different formats:

Format	Structure
Product name	PPPP-TGVV(L)(F)
Ordering code	PPPP-TGVV(L)(F)-MMQ
Type number	PPPP-TGVV(L)(F)-MMQ-XX

Table 28: Product code formats

Table 29 explains the parts of the product code.

Code	Meaning	Example
PPPP	Form factor	LEXI
TG	Platform (Technology and Generation) • Dominant technology: G = GSM, U = UMTS, C = CDMA, N = NB-IoT (LTE Cat NB1/NB2), R = LTE low data rate (Cat M1, Cat 1, Cat 1bis), L = LTE high data rate (Cat 3 and above) • Generation: 1…10	R10
VV	Variant function set based on the same platform: 00…99	40
(L)	LTE category (optionally indicated): M = Cat M1, 1 = Cat 1 or Cat 1bis, 4 = Cat 4, …	1
(F)	Additional features (optional): D = data-only, …	D
MM	Major product version: 00…99	00
Q	Product grade: C = standard, B = professional, A = automotive	B
XX	Minor product version: 00…99	Default value: 00

Table 29: Part identification code

8.3 Ordering information

Ordering No.	Product
LEXI-R10001D-01B	LTE Cat 1bis module Designed for global operation, supporting LTE bands 1,2,3,4,5,7,8,12,13,20,28,66,34,38,39,40,41 16.0 x 16.0 mm, 500 pieces/reel
LEXI-R10401D-00B	LTE Cat 1bis module Mainly designed for operation in North America region, supporting LTE bands 2,4,5,12,13,14,66,71 16.0 x 16.0 mm, 500 pieces/reel
LEXI-R10801D-00B	LTE Cat 1bis module Mainly designed for operation in EMEA / APAC regions, supporting LTE bands 1,3,5,7,8,20,28 16.0 x 16.0 mm, 500 pieces/reel

Table 30: Product ordering codes

Appendix

A Glossary

Abbreviation	Definition
3GPP	3rd Generation Partnership Project
ACMA	Australian Communications and Media Authority
ADC	Analog to Digital Converter
ANATEL	Agência Nacional de Telecomunicações - National Telecommunications Agency (Brazil)
APAC	Asia-Pacific
AOI	Always-On digital Interfaces
BPSK	Binary Phase Shift Keying modulation
Cat	Category
cDRX	Connected mode Discontinuous Reception
CE	European Conformity
CMOS	Complementary Metal-Oxide-Semiconductor
CTS	Clear To Send
DC	Direct Current
DCD	Data Carrier Detect
DL	Down Link (Reception)
DRX	Discontinuous Reception
DSR	Data Set Ready
DSSS	Direct Sequence Spread Spectrum
DTE	Data Terminal Equipment
DTLS	Datagram Transport Layer Security
DTR	Data Terminal Ready
eDRX	Idle mode Extended Discontinuous Reception
EMEA	Europe, Middle-East, Africa
ERS	External Reset Signal
ESD	Electrostatic Discharge
E-UTRA	Evolved Universal Terrestrial Radio Access
FCC	Federal Communications Commission United States
FDD	Frequency Division Duplex
FOAT	Firmware (update) Over AT commands
FOTA	Firmware (update) Over-The-Air
GCF	Global Certification Forum
GDI	Generic Digital Interface
GND	Ground
GPIO	General Purpose Input/Output
GSMA	GSM Association
HDLC	High-level Data Link Control
HTTP	HyperText Transfer Protocol
ID	Identifier
I2C	Inter-Integrated Circuit
I2S	Inter-IC Sound
I/O	Input/Output

Abbreviation	Definition
IEEE	Institute of Electrical and Electronics Engineers
IMEI	International Mobile Equipment Identity
ISED	Innovation, Science and Economic Development Canada
LGA	Land Grid Array
LTE	Long-Term Evolution
LwM2M	Lightweight Machine-to-Machine protocol
M2M	Machine to Machine
MNO	Mobile Network Operator
MQTT	Message Queuing Telemetry Transport
N/A	Not Applicable
NCC	National Communications Commission Taiwan
No	Number
PCN	Product Change Notification / Sample Delivery Note / Information Note
PMU	Power Management Unit
POS	Power On Signal
PSM	Power Saving Mode
PTCRB	PCS Type Certification Review Board
PTW	Page Time Window
QPSK	Quadrature Phase Shift Keying modulation
RAM	Random Access Memory
RAT	Radio Access Technology
RCM	Regulatory Compliance Mark (Australia)
RED	Radio Equipment Directive (European Union)
RF	Radio Frequency
RI	Ring Indicator
RIL	Radio Interface Layer
RTC	Real Time Clock
RTS	Request To Send
Rx	Reception
SAW	Surface Acoustic Wave
SCL	Serial Clock
SDA	Serial Data
SIM	Subscriber Identity Module
SNTP	Simple Network Time Protocol
SSL	Secure Socket Layer
TCP	Transmission Control Protocol
TLS	Transport Layer Security
TS	Technical Specification
Tx	Transmission
UART	Universal Asynchronous Receiver/Transmitter
UDP	User Datagram Protocol
UE	User Equipment
UL	Uplink (Transmission)
USB	Universal Serial Bus
VSWR	Voltage Standing Wave Ratio

Related documentation

[1] u-blox LEXI-R10 series AT commands manual, UBXDOC-686885345-1786
[2] u-blox LEXI-R10 series system integration manual, UBX-23008149
[3] u-blox package information user guide, UBX-14001652
[4] u-blox Mux implementation in cellular modules application note, UBX-13001887
[5] 3GPP TS 27.007 – AT command set for User Equipment (UE)
[6] 3GPP TS 27.005 – Use of Data Terminal Equipment – Data Circuit terminating Equipment (DTE – DCE) interface for Short Message Service (SMS) and Cell Broadcast Service (CBS)
[7] 3GPP TS 27.010 – Terminal Equipment to User Equipment (TE-UE) multiplexer protocol
[8] 3GPP TS 36.521-1 – Evolved Universal Terrestrial Radio Access; User Equipment conformance specification; Radio transmission and reception; Part 1: Conformance Testing
[9] ITU-T Recommendation V24 – List of definitions for interchange circuits between Data Terminal Equipment (DTE) and Data Connection Equipment (DCE)
[10] Universal Serial Bus Revision 2.0 specification, https://www.usb.org/
[11] I2C-bus specification and user manual – UM10204 – NXP semiconductors, https://www.nxp.com/docs/en/user-guide/UM10204.pdf
[12] IEC 60079-0 - Explosive atmospheres, part 0: equipment general requirements
[13] IEC 60079-11 - Explosive atmospheres, part 11: equipment protection by intrinsic safety 'i'
[14] IEC 60079-26 - Explosive atmospheres, part 26: equipment with EPL Ga

☞ For regular updates to u-blox documentation and to receive product change notifications, register on our homepage (www.u-blox.com).

Revision history

Revision	Date	Name	Comments
R01	04-Aug-2023	sses	Initial draft release.
R02	05-Oct-2023	sses	Revised and added some current consumption data. Added CellLocate® support. Added memory-safe emergency power-off. Added Ring Indicator function over GPIO. Clarified GPIO pins characteristics and capabilities. Minor other clarifications and corrections.
R03	07-Nov-2023	sses	Clarified module wake-up and low power mode control. Revised Rx sensitivity figures. Added antenna dynamic tuner interface default factory-programmed configuration. Minor other clarifications and corrections.
R04	04-Dec-2023	sses	Added module weight. Minor other clarifications and corrections.
R05	07-Dec-2023	sses	Minor editorial changes, clarifications and corrections.
R06	13-Dec-2023	sses	Added some current consumption data. Minor other clarifications and corrections.
R07	22-Dec-2023	sses	Revised supported features description. Minor other clarifications and corrections.
R08	29-Mar-2024	sses	Updated LEXI-R10401D and LEXI-R10801D product status to Prototype. Updated module status indication feature and other capabilities of GPIO pins. Added and revised current consumption figures in deep-sleep and low power modes. Added Wi-Fi receiver scan capability. Revised PWR_ON specifications. Minor other clarifications, corrections and characteristics added.
R09	30-May-2024	sses	Updated LEXI-R10801D product status to Engineering sample. Clarified main UART capabilities. Added and revised current consumption figures. Added thermal parameters. Added parameters for ATEX applications. Minor other clarifications.
R10	12-Jun-2024	yatu	Updated LEXI-R10401D firmware version.
R11	31-Jul-2024	sses	Extended document applicability to LEXI-R10001D-01B product version. Updated LEXI-R10401D-00B product status to Engineering sample. Updated LEXI-R10801D-00B product status to Initial production. Updated UART maximum baud rate. Clarified voltage supply domain of the pins. Updated RESET_N minimum low time to trigger module abrupt emergency reset. Minor other clarifications.

Contact

u-blox AG

Address: Zürcherstrasse 68
8800 Thalwil
Switzerland

For further support and contact information, visit us at www.u-blox.com/support.