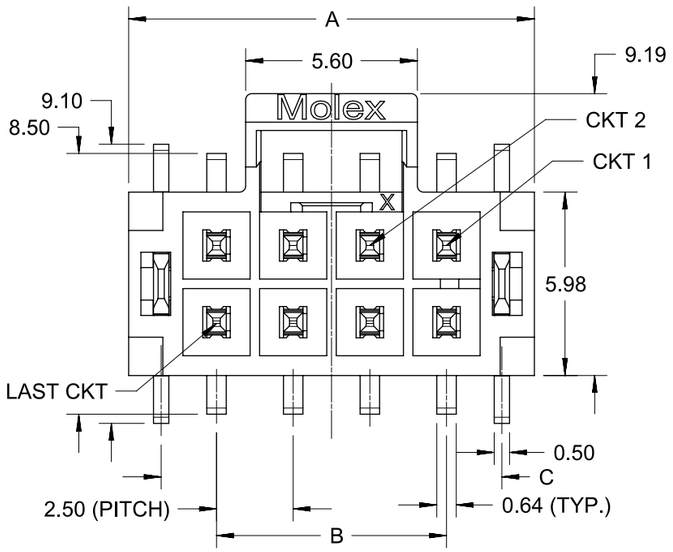

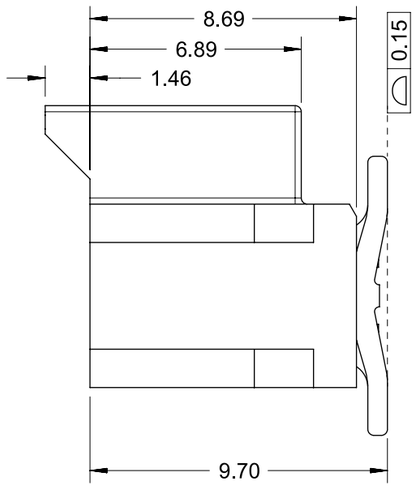

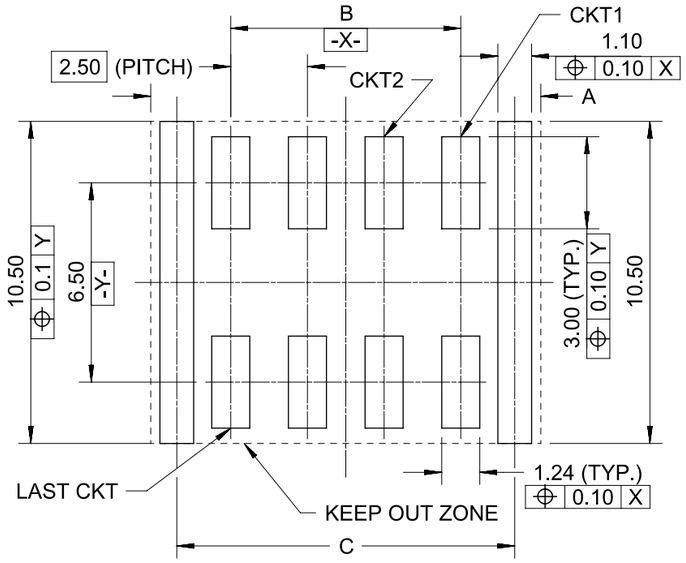

RECOMMENDED PCB LAYOUT(CONNECTOR SIDE VIEW)
THICKNESS=1.6mm MIN. TOLERANCE:±0.05

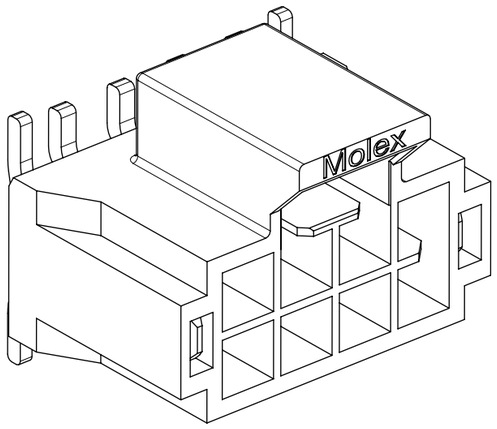

WITHOUT MYLAR

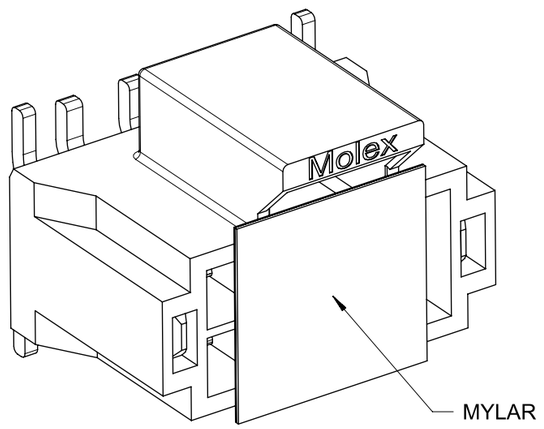

WITH MYLAR
DELIVER TO CUSTOMER

PRE-RELEASE REFERENCE USE ONLY

THIS DRAWING CONTAINS INFORMATION THAT IS PROPRIETARY TO MOLEX ELECTRONIC TECHNOLOGIES, LLC AND SHOULD NOT BE USED WITHOUT WRITTEN PERMISSION

DIMENSION UNITS	SCALE
mm	NTS

GENERAL TOLERANCES (UNLESS SPECIFIED)

ANGULAR TOL	±	3 °
4 PLACES	±	
3 PLACES	±	
2 PLACES	±	0.2
1 PLACE	±	0.3
0 PLACES	±	

DRAFT WHERE APPLICABLE MUST REMAIN WITHIN DIMENSIONS

CURRENT REV DESC: add new part for nano-fit without mylar

EC NO: CO-000042847
DRWN: Guo Li Li 12-Jun-2026
CHK'D: Guo Li Li 15-Jun-2026
APPR: Xue Qing Zhang 15-Jun-2026

INITIAL REVISION:
DRWN: WJHUO 17-Dec-2014
APPR: AYIN 12-Mar-2015

molex

SD DRAWING FOR
NANO-FIT HEADER OF SMT VERTICAL DUAL

G Customer Product Dwg

DOCUMENT NUMBER	DOC TYPE	DOC PART	REVISION
SD-105429-001	PSD	000	E

THIRD ANGLE PROJECTION	DRAWING	SERIES	MATERIAL NUMBER	CUSTOMER	SHEET NUMBER
	A3-SIZE	105429	SEE TABLE	GENERAL MARKET	1 OF 4

DOCUMENT STATUS	Production	RELEASE DATE	

FORMAT: master-tb-prod-A3
REVISION: J1
DATE: 2021/05/01

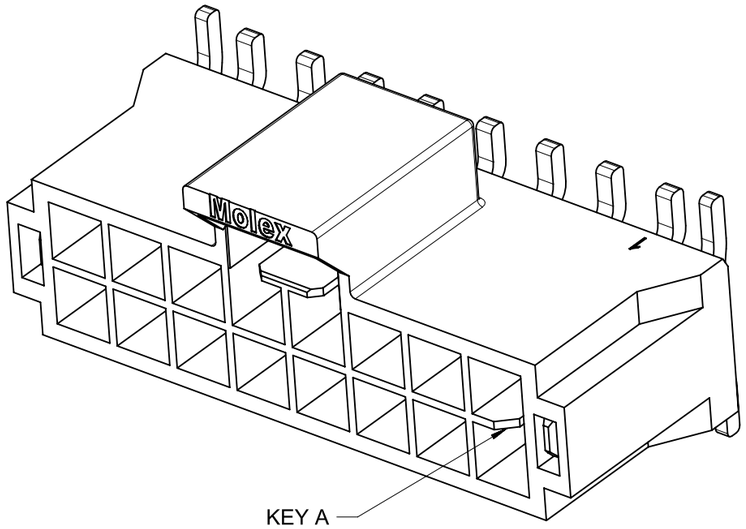

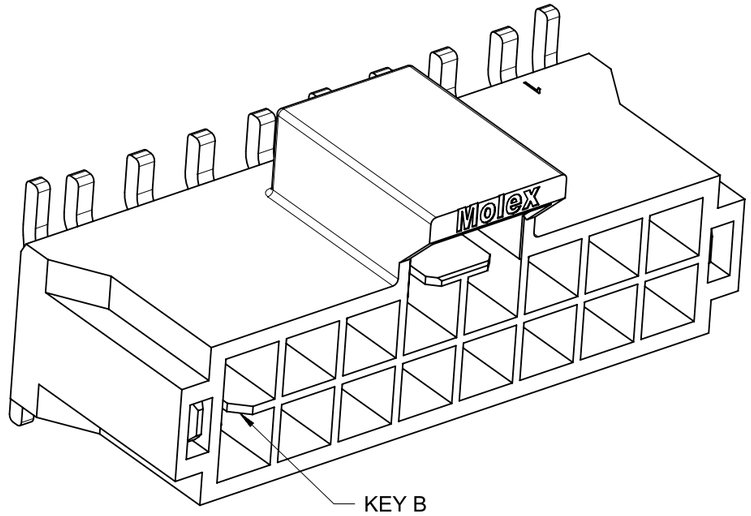

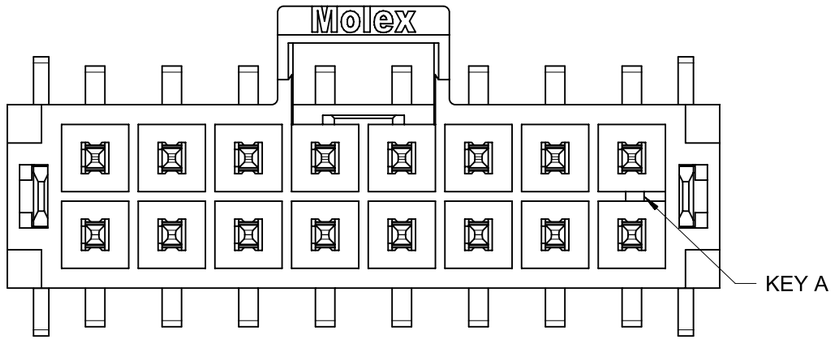

BLACK

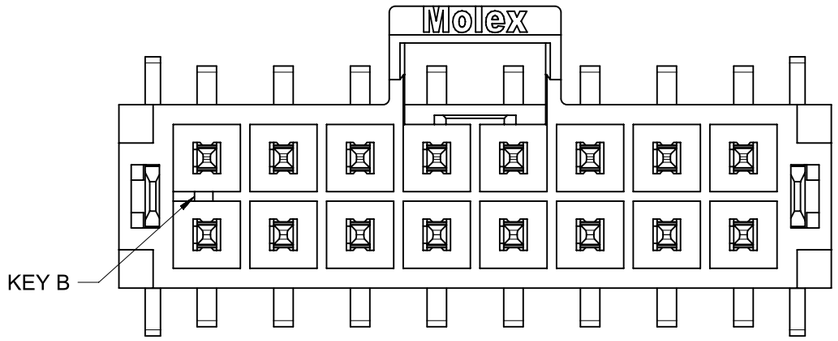

NATURAL

COLOR OPTION

PRE-RELEASE REFERENCE USE ONLY

THIS DRAWING CONTAINS INFORMATION THAT IS PROPRIETARY TO MOLEX ELECTRONIC TECHNOLOGIES, LLC AND SHOULD NOT BE USED WITHOUT WRITTEN PERMISSION

DIMENSION UNITS	SCALE
mm	NTS

GENERAL TOLERANCES (UNLESS SPECIFIED)

ANGULAR TOL	±	3 °
4 PLACES	±	
3 PLACES	±	
2 PLACES	±	0.2
1 PLACE	±	0.3
0 PLACES	±	

DRAFT WHERE APPLICABLE MUST REMAIN WITHIN DIMENSIONS

CURRENT REV DESC: add new part for nano-fit without mylar

EC NO: CO-000042847

DRWN:	Guo Li Li	12-Jun-2026
CHK'D:	Guo Li Li	15-Jun-2026
APPR:	Xue Qing Zhang	15-Jun-2026

INITIAL REVISION:

DRWN:	WJHUO	17-Dec-2014
APPR:	AYIN	12-Mar-2015

THIRD ANGLE PROJECTION | DRAWING: A3-SIZE | SERIES: 105429

molex

SD DRAWING FOR
NANO-FIT HEADER OF SMT VERTICAL DUAL

G Customer Product Dwg

DOCUMENT NUMBER	DOC TYPE	DOC PART	REVISION
SD-105429-001	PSD	000	E

MATERIAL NUMBER	CUSTOMER	SHEET NUMBER
	GENERAL MARKET	2 OF 4

DOCUMENT STATUS	Production	RELEASE DATE	

FORMAT: masterdb-prod-A3
REVISION: J1
DATE: 2021/05/01

PART NUMBER (WITH MYLAR)	PART NUMBER (WITHOUT MYLAR)	DIM. A	DIM. B	DIM. C	CKT SIZE	PLATING	LUBE
105429-1104	105429-1504	8.23	2.50	6.11	4	TIN	NO
105429-1106	105429-1506	10.73	5.00	8.61	6		
105429-1108	105429-1508	13.23	7.50	11.11	8		
105429-1110	105429-1510	15.73	10.00	13.61	10		
105429-1112	105429-1512	18.23	12.50	16.11	12		
105429-1114	105429-1514	20.73	15.00	18.61	14		
105429-1116	105429-1516	23.23	17.50	21.11	16		
105429-1204	105429-1604	8.23	2.50	6.11	4	GOLD 0.38	
105429-1206	105429-1606	10.73	5.00	8.61	6		
105429-1208	105429-1608	13.23	7.50	11.11	8		
105429-1210	105429-1610	15.73	10.00	13.61	10		
105429-1212	105429-1612	18.23	12.50	16.11	12		
105429-1214	105429-1614	20.73	15.00	18.61	14		
105429-1216	105429-1616	23.23	17.50	21.11	16		
105429-1304	105429-1704	8.23	2.50	6.11	4	GOLD 0.76	
105429-1306	105429-1706	10.73	5.00	8.61	6		
105429-1308	105429-1708	13.23	7.50	11.11	8		
105429-1310	105429-1710	15.73	10.00	13.61	10		
105429-1312	105429-1712	18.23	12.50	16.11	12		
105429-1314	105429-1714	20.73	15.00	18.61	14		
105429-1316	105429-1716	23.23	17.50	21.11	16		
105429-1404	105429-1804	8.23	2.50	6.11	4	GOLD 0.76	YES
105429-1406	105429-1806	10.73	5.00	8.61	6		
105429-1408	105429-1808	13.23	7.50	11.11	8		
105429-1410	105429-1810	15.73	10.00	13.61	10		
105429-1412	105429-1812	18.23	12.50	16.11	12		
105429-1414	105429-1814	20.73	15.00	18.61	14		
105429-1416	105429-1816	23.23	17.50	21.11	16		

COLOR: BLACK

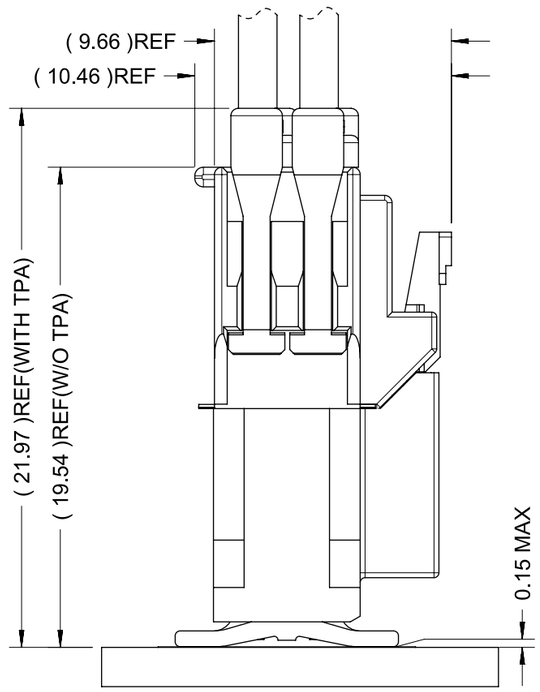

COPLANARITY DETAIL
(SEE NOTE #8)

PART NUMBER (WITH MYLAR)	PART NUMBER (WITHOUT MYLAR)	DIM. A	DIM. B	DIM. C	CKT SIZE	PLATING	LUBE
105429-2104	105429-2504	8.23	2.50	6.11	4	TIN	NO
105429-2106	105429-2506	10.73	5.00	8.61	6		
105429-2108	105429-2508	13.23	7.50	11.11	8		
105429-2110	105429-2510	15.73	10.00	13.61	10		
105429-2112	105429-2512	18.23	12.50	16.11	12		
105429-2114	105429-2514	20.73	15.00	18.61	14		
105429-2116	105429-2516	23.23	17.50	21.11	16		
105429-2204	105429-2604	8.23	2.50	6.11	4	GOLD 0.38	
105429-2206	105429-2606	10.73	5.00	8.61	6		
105429-2208	105429-2608	13.23	7.50	11.11	8		
105429-2210	105429-2610	15.73	10.00	13.61	10		
105429-2212	105429-2612	18.23	12.50	16.11	12		
105429-2214	105429-2614	20.73	15.00	18.61	14		
105429-2216	105429-2616	23.23	17.50	21.11	16		
105429-2304	105429-2704	8.23	2.50	6.11	4	GOLD 0.76	
105429-2306	105429-2706	10.73	5.00	8.61	6		
105429-2308	105429-2708	13.23	7.50	11.11	8		
105429-2310	105429-2710	15.73	10.00	13.61	10		
105429-2312	105429-2712	18.23	12.50	16.11	12		
105429-2314	105429-2714	20.73	15.00	18.61	14		
105429-2316	105429-2716	23.23	17.50	21.11	16		
105429-2404	105429-2804	8.23	2.50	6.11	4	GOLD 0.76	YES
105429-2406	105429-2806	10.73	5.00	8.61	6		
105429-2408	105429-2808	13.23	7.50	11.11	8		
105429-2410	105429-2810	15.73	10.00	13.61	10		
105429-2412	105429-2812	18.23	12.50	16.11	12		
105429-2414	105429-2814	20.73	15.00	18.61	14		
105429-2416	105429-24816	23.23	17.50	21.11	16		

COLOR: NATURAL

NOTES FOR ALL PARTS

1> MATERIAL:
HOUSING: LCP, UL 94V-0.
TERMINAL: BRASS.
SOLDER CLIP: BRASS.
2> PLATING FINISHED:
TERMINAL:
CONTACT AREA:
a. REFLOWED MATTE TIN 0.76 MICRONS MIN; b. GOLD 0.38 MICRONS MIN; c. GOLD 0.76 MICRONS MIN.
SOLDER AREA: TIN 0.76 MICRONS MINIMUM.
UNDER PALTING NICKEL 1.25 MICRONS MINIMUM.
SOLDER CLIP: TIN 2.5 MICRONS MINIMUM; UNDER PLATING NICKEL 1.25 MICRONS MINIMUM.

3> PRODUCT SPECIFICATION: PS-105405-001.
4> PACKAGE: TAPE REEL, DETAILS REFER TO DRAWING 1054291000-PK.
5> PRODUCT MATE WITH SERIES OF 105308 AND 226362(RECEPTACLE).
6> PARTS CONFORM TO CLASS 'B' REQUIREMENTS OF COSMETIC SPECIFICATION PS-45499-002.
7> THE COPLANARITY DIMENSION IS ESTABLISHED BY PLACING THE ASSEMBLY ON A FLAT SURFACE. THE DISTANCE FROM THAT SURFACE TO THE BOTTOM OF ANY TERMINAL OR NAIL MUST NOT EXCEED 0.15MM.

PRE-RELEASE REFERENCE USE ONLY

THIS DRAWING CONTAINS INFORMATION THAT IS PROPRIETARY TO MOLEX ELECTRONIC TECHNOLOGIES, LLC AND SHOULD NOT BE USED WITHOUT WRITTEN PERMISSION

DIMENSION UNITS	SCALE
mm	NTS

GENERAL TOLERANCES (UNLESS SPECIFIED)

ANGULAR TOL	±	3 °
4 PLACES	±	
3 PLACES	±	
2 PLACES	±	0.2
1 PLACE	±	0.3
0 PLACES	±	

DRAFT WHERE APPLICABLE MUST REMAIN WITHIN DIMENSIONS

CURRENT REV DESC: add new part for nano-fit without mylar

EC NO: CO-000042847
DRWN: Guo Li Li 12-Jun-2026
CHK'D: Guo Li Li 15-Jun-2026
APPR: Xue Qing Zhang 15-Jun-2026

INITIAL REVISION:
DRWN: WJHUO 17-Dec-2014
APPR: AYIN 12-Mar-2015

molex

SD DRAWING FOR
NANO-FIT HEADER OF SMT VERTICAL DUAL

G Customer Product Dwg

DOCUMENT NUMBER	DOC TYPE	DOC PART	REVISION
SD-105429-001	PSD	000	E

THIRD ANGLE PROJECTION	DRAWING	SERIES	MATERIAL NUMBER	CUSTOMER	SHEET NUMBER
	A3-SIZE	105429	SEE TABLE	GENERAL MARKET	3 OF 4

DOCUMENT STATUS	Production	RELEASE DATE	

FORMAT: master-prod-A3
REVISION: J1
DATE: 2021/05/06

	4 CKT	6 CKT	8 CKT	10 CKT
BLACK	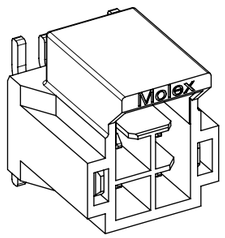	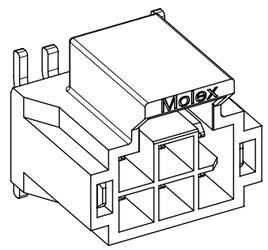	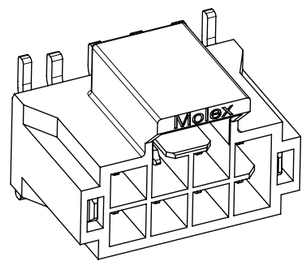	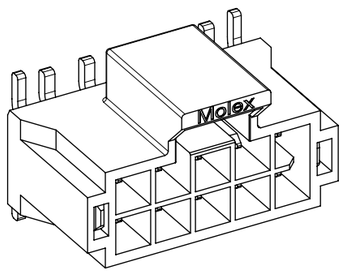
NATURAL	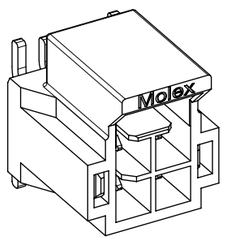	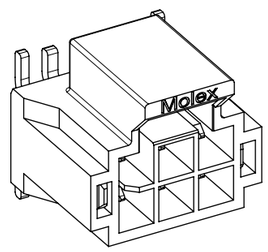	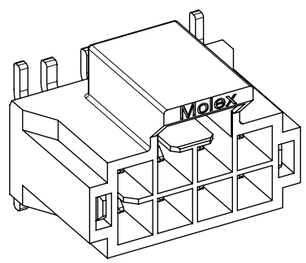	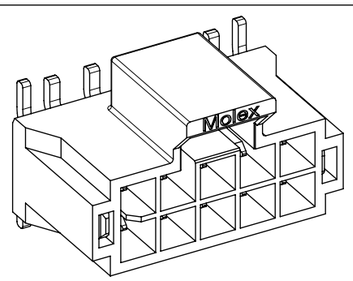

	12 CKT	14 CKT	16 CKT
BLACK	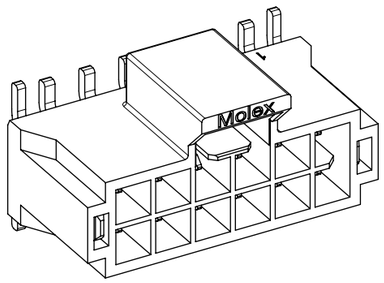	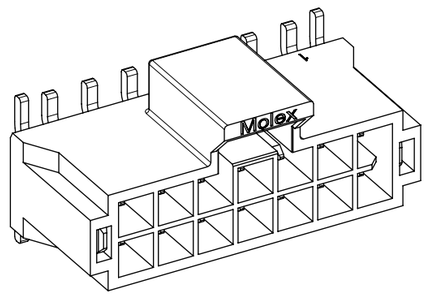	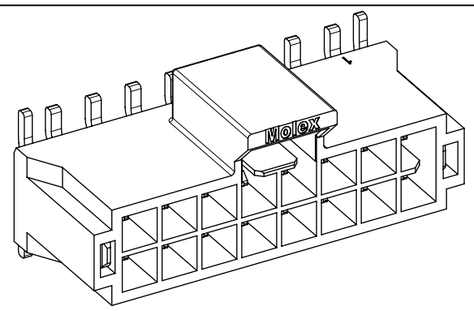
NATURAL	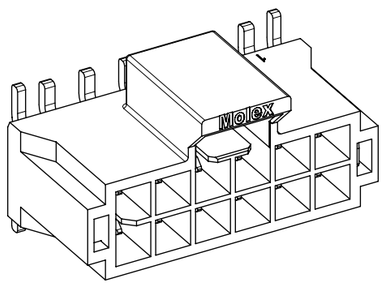	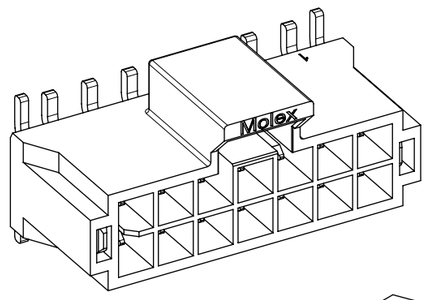	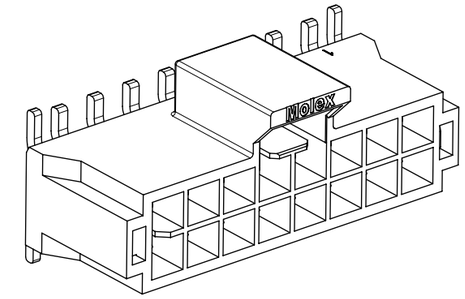

PRE-RELEASE REFERENCE USE ONLY

THIS DRAWING CONTAINS INFORMATION THAT IS PROPRIETARY TO MOLEX ELECTRONIC TECHNOLOGIES, LLC AND SHOULD NOT BE USED WITHOUT WRITTEN PERMISSION

DIMENSION UNITS	SCALE
mm	NTS

GENERAL TOLERANCES (UNLESS SPECIFIED)

ANGULAR TOL	±	3 °
4 PLACES	±	
3 PLACES	±	
2 PLACES	±	0.2
1 PLACE	±	0.3
0 PLACES	±	

DRAFT WHERE APPLICABLE MUST REMAIN WITHIN DIMENSIONS

CURRENT REV DESC: add new part for nano-fit without mylar

EC NO: CO-000042847

DRWN:	Guo Li Li	12-Jun-2026
CHK'D:	Guo Li Li	15-Jun-2026
APPR:	Xue Qing Zhang	15-Jun-2026

INITIAL REVISION:

DRWN:	WJHUO	17-Dec-2014
APPR:	AYIN	12-Mar-2015

molex

SD DRAWING FOR
NANO-FIT HEADER OF SMT VERTICAL DUAL

G Customer Product Dwg

DOCUMENT NUMBER	DOC TYPE	DOC PART	REVISION
SD-105429-001	PSD	000	E

THIRD ANGLE PROJECTION	DRAWING	SERIES	MATERIAL NUMBER	CUSTOMER	SHEET NUMBER
	A3-SIZE	105429		GENERAL MARKET	4 OF 4

DOCUMENT STATUS	Production	RELEASE DATE	

FORMAT: master-tb-prod-A3
REVISION: J1
DATE: 2021/05/01