TXC CORPORATION

4F, NO. 16, Sec. 2 Chung Yang S Rd., Peitou, Taipei, Taiwan.

TEL : 886-2-2894-1202 , 886-2-2895-2201 FAX : 886-2-2894-1206 , 886-2-2895-6207 www.txccorp.com

SPECIFICATION FOR APPROVAL

CUSTOMER	:	
PRODUCT TYPE	:	SMD XTAL 2.0 × 1.6
NOMINAL FREQ.	:	40.000000MHz
TXC P/N	:	8Y40000006
REVISION	:	S1
CUSTOMER P/N	:	
PM / SALES	:	
DATE	:	

CUSTOMER SIGNATURE & Date

(1) TXC requires one copy returned with signature and title of authorized individual that signifies acceptance of the attached specifications.

(2) Orders received and accepted by TXC after return of signed copy of specification will be produced per these specifications.

(3) Any changes to these specifications must be agreed upon by both parties and new revision of the Product Specification Sheet will be issued.

(4) Any issuance of purchase order prior to consigning back the Approval page of "Specification Sheets" from customers will be regarded as the agreement on the contents of these specifications.

Attachment: Product Specification Sheet

1

2

3

4

5

RoHS Compliant

TXC CORPORATION

4F, NO. 16, Sec. 2 Chung Yang S Rd., Peitou, Taipei, Taiwan.

TEL : 886-2-2894-1202 , 886-2-2895-2201 FAX : 886-2-2894-1206 , 886-2-2895-6207 www.txccorp.com

PRODUCT SPECIFICATION SHEET

PRODUCT TYPE	:	SMD XTAL 2.0 × 1.6
NOMINAL FREQ.	:	40.000000MHz
TXC P/N	:	8Y40000006
REVISION	:	S1

PE/RD	QA	MFG
23-Jun-10		

NOTE:

(1)Lead Free Products are "Directive 2002/95/EC of The European Parliament of 27 January 2003 on the restriction of the use of certain hazardous substances (RoHS) in electrical and electronic equipment" Compliant (Attachment: SGS Test Report).

(2)Revision "Sx" is for engineering samples only. PE/RD's approval required.

(3)Revision "Ax" is production ready. PE, QA and MFG's approval required

RoHS Compliant

Rev	Revise page	Revise contents	Date	Ref.No.	Reviser
S1	N/A	Initial released	23-Jun-10	N/A	Yachuan Miao

ELECTRICAL SPECIFICATIONS

Standard atmospheric conditions

Unless otherwise specified, the standard range of atmospheric conditions for making measurement and tests are as follow:

Ambient temperature : 25±10℃

Relative humidity : 40%~70%

If there is any doubt about the results, measurement shall be made within the following limits:

Ambient temperature : 25±3℃

Relative humidity : 40%~70%

Measure equipment

Electrical characteristics measured by HP E5100A or equivalent.

Crystal cutting type

The crystal is using AT CUT (thickness shear mode).

Unit Weight:

0.005±0.001 g/pcs

	Parameters	Symbol	Electrical Spec.				Notes
			Min.	Typ.	Max.	Units	
1	Nominal Frequency	FL		40.000000		MHz	-
2	Oscillation Mode	-		Fundamental		-	-
3	Load Capacitance	CL		9		pF	-
4	Frequency Tolerance	-		±10		ppm	at 25 ℃ ± 3 ℃
5	Frequency Stability	-		±10		ppm	Over Operating Temp. Range (Reference 25℃)
6	Operating Temperature	-	-20	~	70	℃	-
7	Aging	-		±3		ppm	1st Year
8	Drive Level	DL	-	100	-	μW	-
9	Equivalent Series Resistance	ESR	-	-	40	Ω	-
10	Shunt Capacitance C0	C0	-	0.8	-	pF	-
11	Insulation Resistance	-	500	-	-	MΩ	at DC 100V
12	Storage Temperature Range	-	-40	~	85	℃	-

■ DIMENSIONS

(Unit:mm)

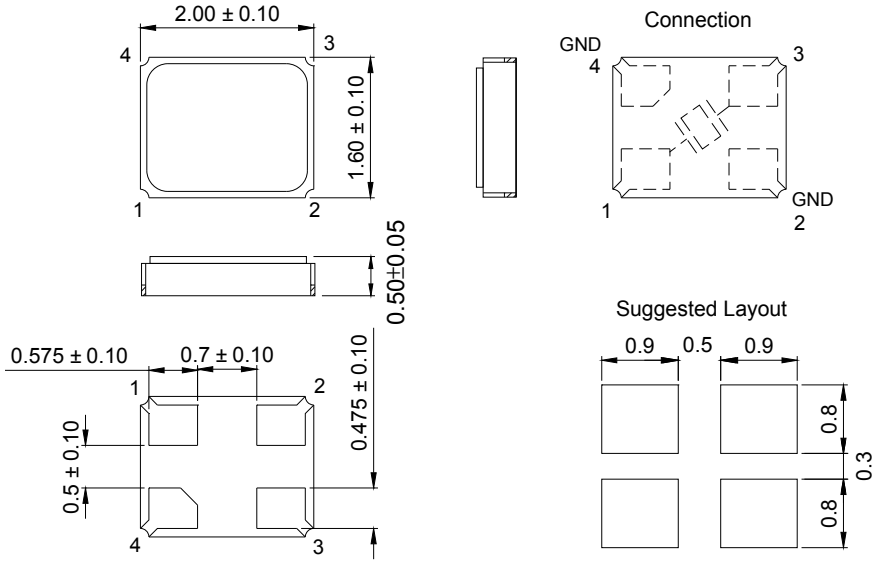

■ MARKING

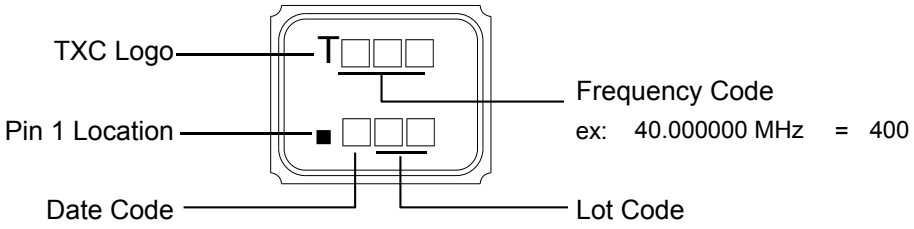

Date Code:

YEAR \ MONTH	JAN	FEB	MAR	APR	MAY	JUN	JUL	AUG	SEP	OCT	NOV	DEC
2005 2009 2013 2017	A	B	C	D	E	F	G	H	J	K	L	M
2006 2010 2014 2018	N	P	Q	R	S	T	U	V	W	X	Y	Z
2007 2011 2015 2019	a	b	c	d	e	f	g	h	j	k	l	m
2008 2012 2016 2020	n	p	q	r	s	t	u	v	w	x	y	z

*This date code will be cycled every four years

Production location:Taiwan

■ SUGGESTED REFLOW PROFILE

Total time : 200 sec. Max.

Solder melting point :220℃

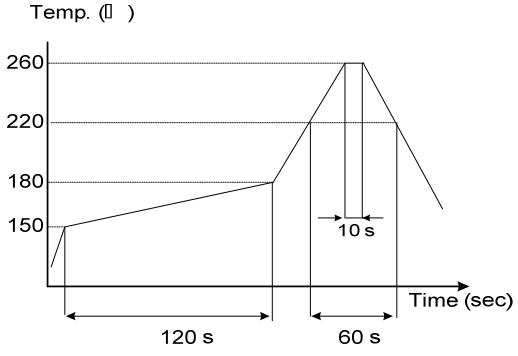

STRUCTURE ILLUSTRATION

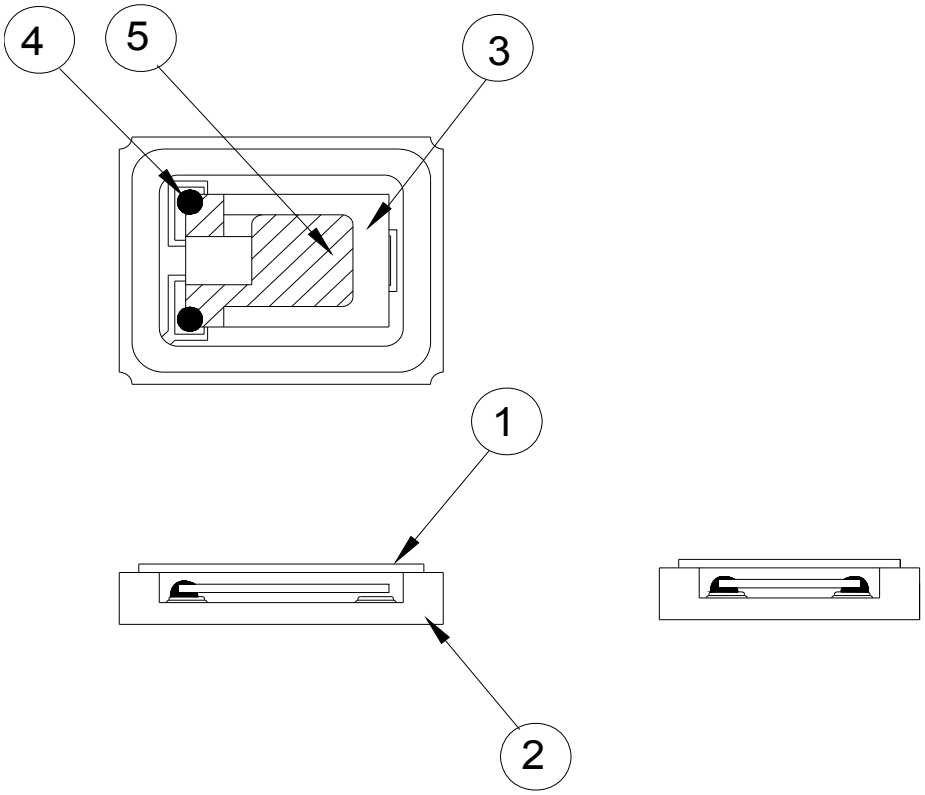

NO	COMPONENTS	MATERIALS	FINISH/SPECIFICATIONS
1	Lid	Kovar	-
2	Base(Package)	Ceramic (Al_2O_3)	Alumina ceramics
3	Crystal blank	SiO2	-
4	Conductive adhesive	Ag	Silicone resin
5	Electrode	Noble Metal + Cr	-

■ PACKING

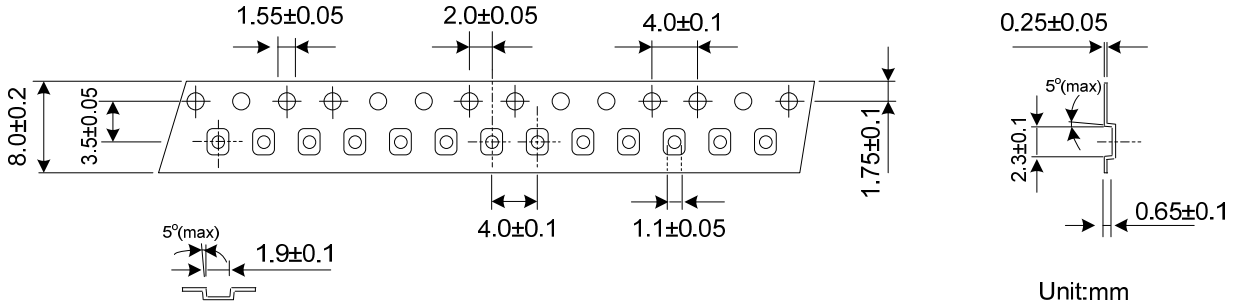

REMARK :

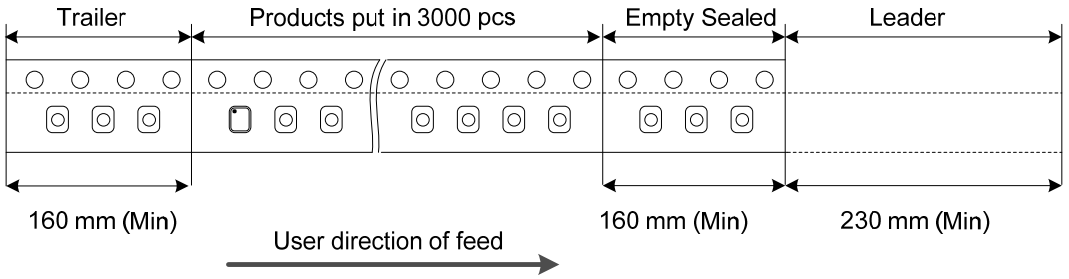

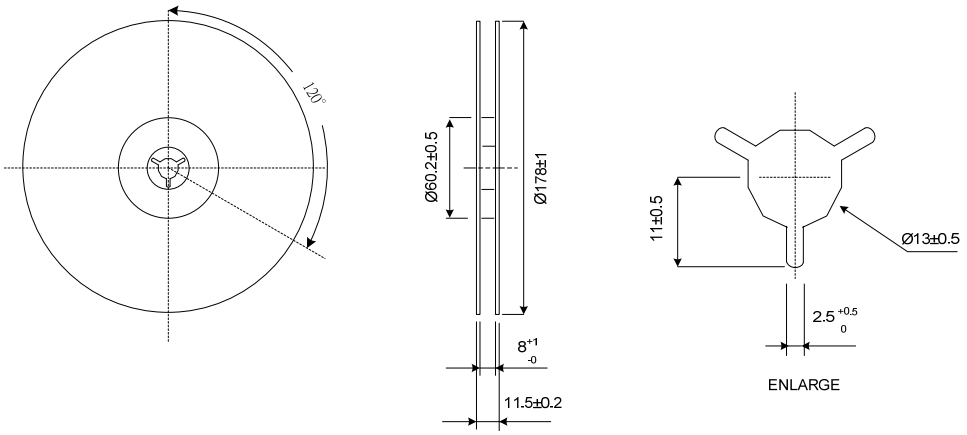

■ RELIABILITY SPECIFICATIONS

1.Mechanical Endurance

No.	Test Item	Test Methods		REF.DOC
1.1	Drop Test	150 cm height, 3 times on concrete floor.		JIS C6701
1.2	Mechanical Shock	Device are shocked to half sine wave (1000 G) three mutually perpendicular axes each 3 times. 0.5m sec. duration time		MIL-STD-202
1.3	Vibration	Frequency range Amplitude Sweep time perpendicular axes each test time	10 ~ 2000 Hz 1.52 mm/20G 20 minutes 4 Hrs (Total test time 12 Hrs)	MIL-STD-883
1.4	Gross Leak	Standard Sample For Automatic Gross Leak Detector, Test Pressure: 2kg / cm^2		MIL-STD-883
1.5	Fine Leak	Helium Bombing 4.5 kg/ cm^2 for 2 Hrs		
1.6	Solder ability	Temperature Immersing depth Immersion time Flux	245 ℃ ± 5℃ 0.5 mm minimum 5 ± 1 seconds Rosin resin methyl alcohol solvent (1 : 4)	MIL-STD-883

2.Environmental Endurance

No.	Test Item	Test Methods		REF. DOC
2.1	Resistance To Soldering Heat	Pre-heat temperature Pre-heat time Test temperature Test time	125 ℃ 60 ~ 120 sec. 260 ± 5 ℃ 10 ± 1 sec.	MIL-STD-202
2.2	High Temp. Storage	+ 125 ℃ ± 3 ℃ for 500 ± 12 Hrs		MIL-STD-883
2.3	Low Temp. Storage	- 40 ℃ ± 3 ℃ for 500 ± 12 Hrs		
2.4	Thermal Shock	Total 100 cycles of the following temperature cycle 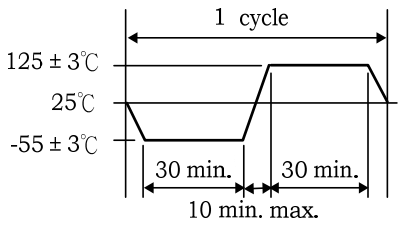		MIL-STD-883
2.5	High Temp＆Humidity	85℃ ± 3℃, RH 85% , 500 Hrs		JIS C5023