422 Series

Thin Film Fuse, 2410 Fast Acting

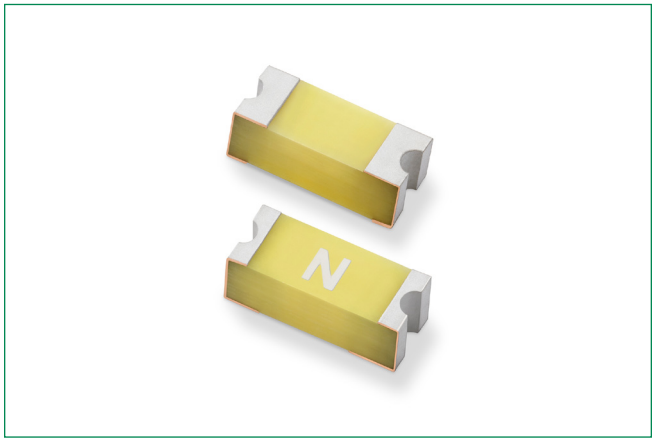

Description

422 Series fuse is a 250 V rated Wire-in-Air Surface Mount Fuse, designed specifically to provide circuit protection to space constrained application. The wire-in-air design of the 422 Series results in a relatively high I^2t in a 2410 size.

Features & Benefits

- Operating Temperature from -55 °C to 125 °C
- 100% Lead-free, Halogen-Free and RoHS compliant
- Fast Acting
- Recognized to UL/CSA/NMX 248-1 and UL/CSA/NMX 248-14
- Conforms to EN/IEC 60127-1 and EN/IEC 60127-7
- Conforms to J60127-1 and J60127-7
- Avoids nuisance opening due to high inrush and surge current inherent in the system
- Suitable for harsh environments

Applications

- Industrial equipment
- Backlight inverter
- Power supply
- Telecom
- Server
- Networking
- Gaming system
- White goods

Additional Information

Resources | Accessories | Samples

Agency Approvals

Agency	Agency File/Certificate Number	Ampere Range
c UL us	E10480	0.75A to 5A
	J50501694	0.75A to 5A
	JD60156347	0.75A to 5A
CE	N/A	0.75A to 5A
UK CA	N/A	0.75A to 5A

Electrical Characteristics

% of Ampere Rating	Ampere Rating	Opening Time at 25°C
100%	0.75 A to 5 A	4 Hours, Minimum
200%	0.75 A to 5 A	5 Seconds, Maximum

Electrical Specifications

Ampere Rating (A)	Amp Code	Max Voltage Rating (V)	Interrupting Rating (AC/DC) [1,4]	Nominal Resistance (Ohms) [2]	Nominal Melting I^2t (A^2sec) [3]	Agency Approvals				
						CE	UK CA	c UL us		
0.750	.750	250	300 A @ 32 VDC 100 A @ 125 VDC 50 A @ 250 VAC 50 A @ 250 VDC	0.137	0.282	x	x	x	x	x
1.00	001.	250		0.0994	0.611	x	x	x	x	x
1.25	1.25	250		0.0734	1.09	x	x	x	x	x
1.50	01.5	250		0.0589	1.62	x	x	x	x	x
2.00	002.	250	10,000 A @ 86 VDC	0.0453	2.85	x	x	x	x	x
2.50	02.5	125	300 A @ 32 VDC 100 A @ 125 VDC 50 A @ 125 VAC	0.0278	1.29	x	x	x	x	x
3.00	003.	125		0.0223	2.09	x	x	x	x	x
3.15	3.15	125		0.0213	2.40	x	x	x	x	x
3.50	03.5	125		0.0192	2.82	x	x	x	–	x
4.00	004.	125		0.0168	3.60	x	x	x	x	x
5.00	005.	125		0.0137	5.90	x	x	x	x	x

Notes

1. AC Interrupting Rating tested at rated voltage with unity power factor. DC Interrupting Rating tested with time constant <0.8 ms for 32 VDC, <2.2 ms for 86 VDC, <0.22 ms for 125 VDC, and <0.1 ms for 250 VDC.
2. Nominal Resistance measured with <10% rated current.
3. Nominal Melting I^2t measured at 1 msec. opening time.
4. Interrupting Rating may differ based on Agency Approval. See Agency Approval certificate for more details.

© 2023 Littelfuse, Inc.
Specifications are subject to change without notice.
Revised: GD. 08/08/23

422 Series
Thin Film Fuse, 2410 Fast Acting

Temperature Re-rating Curve

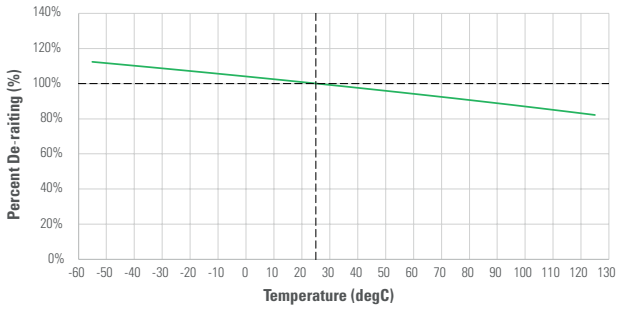

Notes: Re-rating depicted in this curve is in addition to the standard re-rating of 25% for continuous operation.
Example:
For continuous operation at 85 ºC, the fuse should be rerated as follows:
$I = (0.75)(0.90)I_N = (0.675)I_N$

Average Time Current Curves

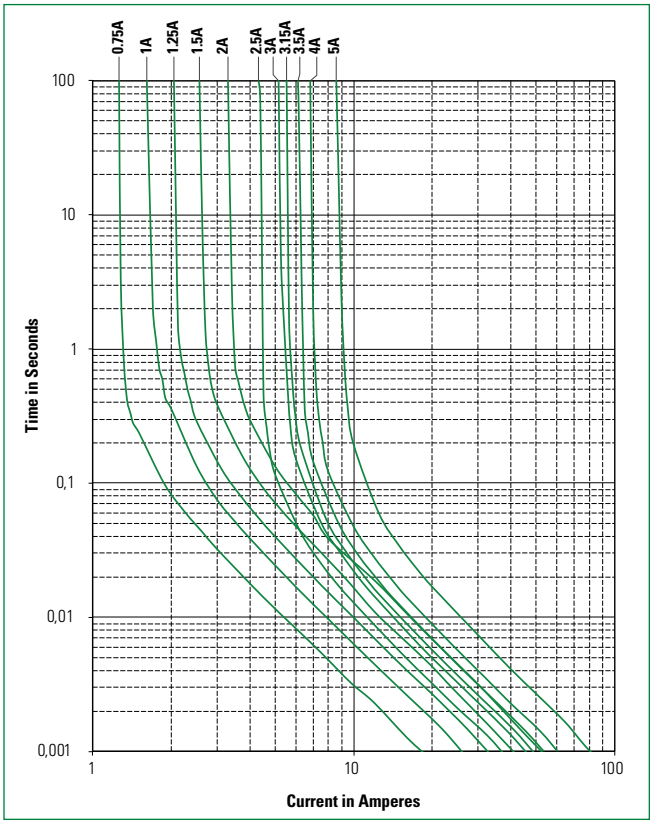

Pulse Cycle Withstand Capability

No. of Pulses to withstand	Ratio of Pulse I^2t to Nominal I^2t
100,000	Pulse I^2t = 18% of Nominal Melting I^2t
10,000	Pulse I^2t = 29% of Nominal Melting I^2t
1,000	Pulse I^2t = 38% of Nominal Melting I^2t
100	Pulse I^2t = 48% of Nominal Melting I^2t

Note
***** Being tested

Soldering Perameters

Reflow Condition		Pb – Free assembly
Pre Heat	**- Temperature Min ($T_{s(min)}$)**	150 °C
	- Temperature Max ($T_{s(max)}$)	200 °C
	- Time (Min to Max) (t_s)	60–180 secs
Average ramp up rate (Liquidus Temp (T_L) to peak		5 °C/second max.
$T_{S(max)}$ to T_L - Ramp-up Rate		5 °C/second max.
Reflow	**- Temperature (T_L) (Liquidus)**	217 °C
	- Temperature (t_L)	60–150 secs
Peak Temperature (T_P)		260+0/–5 °C
Time within 5 °C of actual peak Temperature (t_p)		10–30 seconds
Ramp-down Rate		6 °C/second max.
Time 25 °C to peak Temperature (T_P)		8 minutes max.
Do not exceed		260 °C

Wave Soldering Parameters	260 °C Peak Temperature, 10 seconds max.

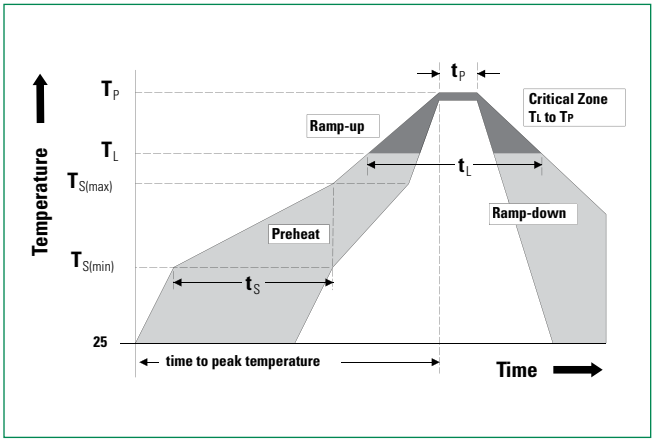

© 2023 Littelfuse, Inc.
Specifications are subject to change without notice.
Revised: GD. 08/08/23

422 Series
Thin Film Fuse, 2410 Fast Acting

Product Characteristics

Materials	**Body:** Epoxy Resin **Terminations:** Cu/Ni/Sn (100% Pb-free)
Product Marking	**Body:** Ampere Marking Code. See Part Marking
Insulation Resistance	IEC 60127-4 (0.1 MΩ Min.)
High Temperature Storage	MIL-STD-202, Method 108
Thermal Shock Test	JESD22 Method A104C
Biased Humidity	MIL-STD-202, Method 103, 85 °C/85% RH with 10% operating power for 1000 hrs
Operational Life	MIL-STD-202, Method 108, Test Condition D
Resistance to Solvents	MIL-STD-202, Method 215
Mechanical Shock	MIL-STD-202, Method 213, Test Condition C
High Frequency Vibration	MIL-STD-202, Method 204
Resistance to Soldering Heat	MIL-STD-202, Method 210 (Test K modified)
Solderability	JESD22-B102E Method 1
Moisture Resistance	MIL-STD-202 Method 106
Moisture Sensitivity Level 1	IPC/JEDEC J-STD-020D Level 1
Terminal Strength	IEC60127-4

Dimensions

All dimensions in mm (in)

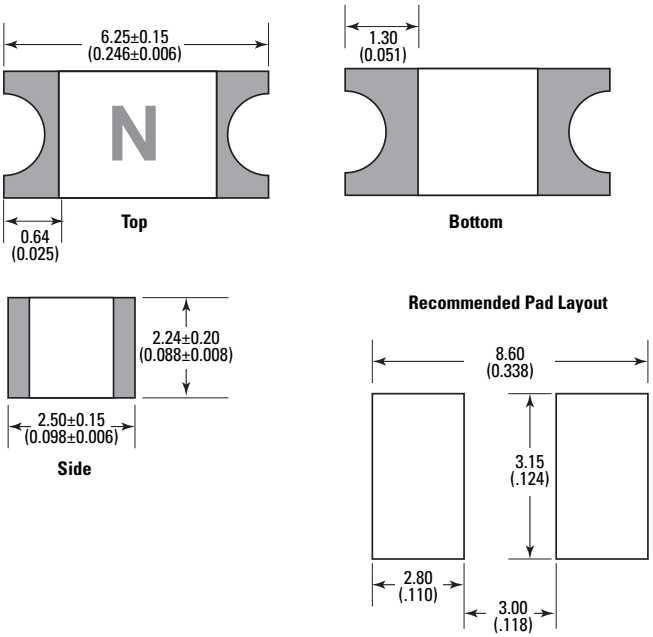

Part Numbering System

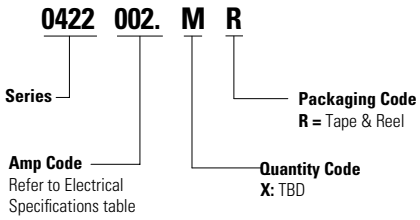

Part Marking System

Amp Code	Marking Code
.750	**G**
001.	**H**
1.25	**J**
01.5	**K**
002.	**N**
02.5	**O**
003.	**P**
3.15	**B**
03.5	**C**
004.	**S**
005.	**T**

Packaging

Packaging Option	Packaging Specification	Quantity	Quantity & Packaging Code
Tape and Reel	EIA-481	1000	MR

Disclaimer Notice - Information furnished is believed to be accurate and reliable. However, users should independently evaluate the suitability of and test each product selected for their own applications. Littelfuse products are not designed for, and may not be used in, all applications. Read complete Disclaimer Notice at http://www.littelfuse.com/disclaimer-electronics.

© 2023 Littelfuse, Inc.
Specifications are subject to change without notice.
Revised: GD. 08/08/23