TPS7A15 400mA 低输入电压、低输出电压、超低压差稳压器

1 特性

- 超低输入电压范围：0.7V 至 2.2V
- 高效率：
  - 400mA 时的压降：80mV（最大值）
  - 适用于 $V_{IN} = V_{OUT} + 100mV$
- 出色的负载瞬态响应：
  - I_{LOAD} 在 10µs 内从 1mA 变化到 250mA 时为 20mV
- 精度（负载、线路、温度）：+1%，–1.1%
- 高 PSRR：1kHz 时为 84dB
- 可提供固定输出电压：
  - 0.5V 至 2.0V（阶跃为 25mV）
- V_{BIAS} 范围：
  - 2.2V 至 5.5V
- 封装：
  - 6 引脚 1mm × 0.71mm DSBGA
  - 6 引脚，2mm × 2mm WSON
- 有源输出放电

2 应用

- 摄像头模块
- 无线耳机和耳塞
- 智能手表、健身追踪器
- 智能手机和平板电脑
- 便携式医疗设备
- 固态硬盘 (SSD)

3 说明

TPS7A15 是一款具有出色瞬态响应的小型低压差稳压器 (LDO)。该器件可提供 400mA 电流，并具有出色的交流性能（负载和线路瞬态响应）。输入电压范围为 0.7V 至 2.2V，输出电压范围为 0.5V 至 2.0V，且在负载、线路和温度范围内具有 1% 的超高精度。

主电源路径通过 IN 引脚，可连接至电压至少高于输出电压 50mV 的电源。所有电气特性（包括出色的输出电压容差、瞬态响应和 PSRR）均针对输入电压（比输出电压高 100mV）进行规定，因此可实现高效率。该稳压器使用一个为 LDO 内部电路供电的外部较高 V_{BIAS} 电压轨，支持很低的输入电压。例如，IN 引脚的电源电压可以是高效直流/直流降压稳压器的输出，而 BIAS 引脚电源电压可来自可再充电电池。

TPS7A15 配备了一个有源下拉电路，用于在输出处于禁用状态时使其快速放电，并提供已知的启动状态。

TPS7A15 采用 2mm × 2mm、6 引脚 WSON 封装和超小型 0.71mm × 1.0mm、6 凸点 WCSP 封装。

封装信息

器件型号	封装(1)	封装尺寸(2)
TPS7A15	YCK（WCSP，6）	0.71mm × 1mm
	DRV（WSON，6）	2mm × 2mm

(1) 如需了解所有可用封装，请参阅数据表末尾的可订购产品附录。
(2) 封装尺寸（长 × 宽）为标称值，并包括引脚（如适用）。

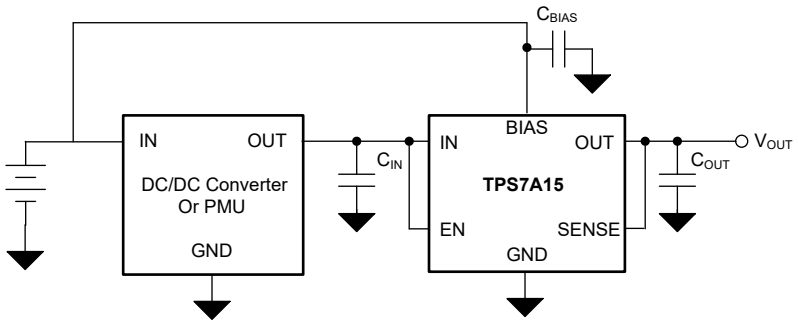

典型应用电路

本文档旨在为方便起见，提供有关 TI 产品中文版本的信息，以确认产品的概要。有关适用的官方英文版本的最新信息，请访问 www.ti.com，其内容始终优先。TI 不保证翻译的准确性和有效性。在实际设计之前，请务必参考最新版本的英文版本。

Table of Contents

1 特性.....1
2 应用.....1
3 说明.....1
4 Revision History.....2
5 Pin Configuration and Functions.....3
6 Specifications.....5
6.1 Absolute Maximum Ratings.....5
6.2 ESD Ratings.....5
6.3 Recommended Operating Conditions.....5
6.4 Thermal Information.....6
6.5 Electrical Characteristics.....6
6.6 Switching Characteristics.....7
6.7 Typical Characteristics.....9
7 Detailed Description.....14
7.1 Overview.....14
7.2 Functional Block Diagram.....14
7.3 Feature Description.....15
7.4 Device Functional Modes.....17
8 Application and Implementation.....18
8.1 Application Information.....18
8.2 Typical Application.....22
8.3 Power Supply Recommendations.....23
8.4 Layout.....24
9 Device and Documentation Support.....25
9.1 Device Support.....25
9.2 Documentation Support.....25
9.3 接收文档更新通知.....25
9.4 支持资源.....25
9.5 Trademarks.....25
9.6 静电放电警告.....25
9.7 术语表.....25
10 Mechanical, Packaging, and Orderable Information.....26
10.1 Mechanical Data.....27

4 Revision History

注：以前版本的页码可能与当前版本的页码不同

Changes from Revision A (July 2023) to Revision B (August 2023)	Page
• 将 DRV (WSON) 封装从*预告信息*更改为*量产数据*	1
• Changed specifications for DRV package	6
• Added *Output Noise vs Frequency and I_{OUT}* curve	9
• Added *Recommended Layout (DRV Package)* figure	24
• Added *Evaluation Module* section	25

Changes from Revision * (June 2022) to Revision A (July 2023)	Page
• 向文档中添加了 DRV (WSON) 封装作为*预告信息*	1
• 通篇将固定输出电压范围从 *0.5V 至 2.05V* 更改为 *0.5V 至 2.0V*	1
• 更改了*说明*部分最后一段中的封装说明	1

Copyright © 2023 Texas Instruments Incorporated

5 Pin Configuration and Functions

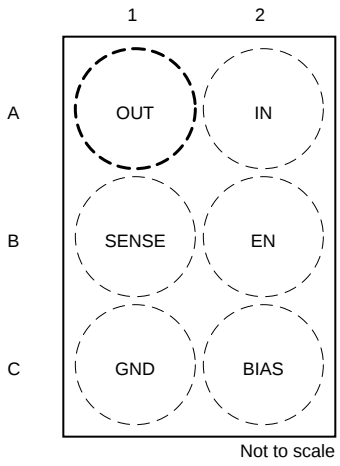

图 5-1. YCK Package, 6-Pin WCSP, 0.35-mm Pitch (Top View)

表 5-1. Pin Functions: YCK Package

PIN		TYPE	DESCRIPTION
NO.	NAME		
A1	OUT	Output	Regulated output pin. A 1-µF or greater capacitance is required from OUT to ground for stability. For best transient response, use a 2.2-µF or larger ceramic capacitor from OUT to GND. Place the output capacitor as close to OUT as possible.
A2	IN	Input	Input pin. A 0.75-µF or greater capacitance is required from IN to ground for stability. For good transient response, use a 2.2-µF or larger ceramic capacitor from IN to GND. Place the input capacitor as close to input of the device as possible.
B1	SENSE	Input	SENSE input. This pin is a feedback input to the regulator for SENSE connections. Connecting SENSE to the load helps eliminate voltage errors resulting from trace resistance between OUT and the load.
B2	EN	Input	Enable pin. Driving this pin to logic high enables the low-dropout regulator (LDO). Driving this pin to logic low disables the LDO. If enable functionality is not required, this pin must be connected to IN or BIAS.
C1	GND	—	Ground pin. This pin must be connected to ground.
C2	BIAS	Input	BIAS pin. This pin enables the use of low-input voltage, low-output voltage (LILO) conditions. For best performance, use a 0.1-µF or larger ceramic capacitor from BIAS to GND. Place the bias capacitor as close to BIAS as possible.

Copyright © 2023 Texas Instruments Incorporated

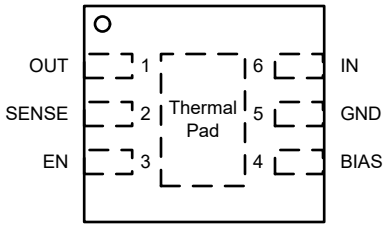

图 5-2. DRV Package, 6-Pin WSON With Exposed Thermal Pad (Top View)

表 5-2. Pin Functions: DRV Package

PIN		TYPE	DESCRIPTION
NO.	NAME		
4	BIAS	Input	BIAS pin. This pin enables the use of LILO conditions. For best performance, use a 0.1-µF or larger ceramic capacitor from BIAS to GND. Place the bias capacitor as close to BIAS as possible.
3	EN	Input	Enable pin. Driving this pin to logic high enables the LDO. Driving this pin to logic low disables the LDO. If enable functionality is not required, this pin must be connected to IN or BIAS.
5	GND	—	Ground pin. This pin must be connected to ground.
6	IN	Input	Input pin. A 0.75-µF or greater capacitance is required from IN to ground for stability. For good transient response, use a 2.2-µF or larger ceramic capacitor from IN to GND. Place the input capacitor as close to input of the device as possible.
1	OUT	Output	Regulated output pin. A 1-µF or greater capacitance is required from OUT to ground for stability. For best transient response, use a 2.2-µF or larger ceramic capacitor from OUT to GND. Place the output capacitor as close to OUT as possible.
2	SENSE	Input	SENSE input. This pin is a feedback input to the regulator for SENSE connections. Connecting SENSE to the load helps eliminate voltage errors resulting from trace resistance between OUT and the load.
Thermal Pad		—	The thermal pad is electrically connected to the GND node. Connect to the GND plane for improved thermal performance.

Copyright © 2023 Texas Instruments Incorporated

6 Specifications

6.1 Absolute Maximum Ratings

over operating free-air temperature range unless otherwise noted.(1)

		MIN	MAX	UNIT
Voltage	Input, V_{IN}	–0.3	2.4	V
	Enable, V_{EN}	–0.3	6.0	
	Bias, V_{BIAS}	–0.3	6.0	
	Sense, V_{SENSE}	–0.3	V_{IN} + 0.3 (2)	
	Output, V_{OUT}	–0.3	V_{IN} + 0.3 (2)	
Current	Maximum output	Internally limited		A
Temperature	Operating junction, T_J	–40	150	°C
	Storage, T_{stg}	–65	150	

(1) Operation outside the Absolute Maximum Ratings may cause permanent device damage. Absolute maximum ratings do not imply functional operation of the device at these or any other conditions beyond those listed under Recommended Operating Conditions. If briefly operating outside the Recommended Operating Conditions but within the Absolute Maximum Ratings, the device may not sustain damage, but it may not be fully functional. Operating the device in this manner may affect device reliability, functionality, performance, and shorten the device lifetime.
(2) The absolute maximum rating is 2.4 V or (V_{IN} + 0.3 V), whichever is less.

6.2 ESD Ratings

			VALUE	UNIT
$V_{(ESD)}$	Electrostatic discharge	Human-body model (HBM), per ANSI/ESDA/JEDEC JS-001(1)	±3000	V
		Charged-device model (CDM), per JEDEC specification JESD22-C101(2)	±750	

(1) JEDEC document JEP155 states that 500-V HBM allows safe manufacturing with a standard ESD control process.
(2) JEDEC document JEP157 states that 250-V CDM allows safe manufacturing with a standard ESD control process.

6.3 Recommended Operating Conditions

over operating junction temperature range (unless otherwise noted). (1)

		MIN	NOM	MAX	UNIT
V_{IN}	Input voltage	0.7		2.2	V
V_{BIAS}	Bias voltage	Greater of 2.2 or V_{OUT} + 1.4		5.5	V
V_{OUT}	Output voltage	0.5		2.0	V
I_{OUT}	Peak output current	0		400	mA
C_{IN}	Input capacitance(2)	0.75			µF
C_{BIAS}	Bias capacitance(3)		0.1		µF
C_{OUT}	Output capacitance, DRV package	1		22	µF
C_{OUT}	Output capacitance, YCK package	1		47	µF
ESR	Output capacitor series resistance			100	mΩ
T_J	Operating junction temperature	–40		125	℃

(1) All voltages are with respect to GND.
(2) An input capacitor is required to counteract the effect of source resistance and inductance, which may in some cases cause symptoms of system level instability such as ringing or oscillation, especially in the presence of load transients. A larger input capacitor may be necessary depending on the source impedance and system requirements.
(3) A BIAS input capacitor is not required for LDO stability. However, a capacitor with a derated value of at least 0.1 µF is recommended to maintain transient, PSRR, and noise performance.

Copyright © 2023 Texas Instruments Incorporated

6.4 Thermal Information

THERMAL METRIC[1]		TPS7A15		UNIT
		DRV (WSON)	YCK (DSBGA)	
		6 PINS	6 PINS	
$R_{\theta JA}$	Junction-to-ambient thermal resistance[2]	75.7	148.5	°C/W
$R_{\theta JC(top)}$	Junction-to-case (top) thermal resistance	89.1	1.3	°C/W
$R_{\theta JB}$	Junction-to-board thermal resistance	35.0	42.1	°C/W
ψ_{JT}	Junction-to-top characterization parameter	4.0	0.5	°C/W
ψ_{JB}	Junction-to-board characterization parameter	35.0	42.1	°C/W
$R_{\theta JC(bot)}$	Junction-to-case (bottom) thermal resistance	19.7	n/a	°C/W

(1) For more information about traditional and new thermal metrics, see the *Semiconductor and IC Package Thermal Metrics* application note.
(2) For information about how to improve junction-to-ambient thermal resistance, see the *An empirical analysis of the impact of board layout on LDO thermal performance* application note.

6.5 Electrical Characteristics

specified at T_J = –40°C to +125°C, V_{IN} = $V_{OUT(NOM)}$ + 0.1 V, V_{BIAS} = greater of 2.2 V or $V_{OUT(NOM)}$ + 1.4 V, I_{OUT} = 1 mA, V_{EN} = 1.0 V, C_{IN} = 1 µF, C_{OUT} = 1 µF, and C_{BIAS} = 0.1 µF, unless otherwise noted; all typical values are at T_J = 25°C

PARAMETER		TEST CONDITIONS		MIN	TYP	MAX	UNIT
V_{OUT}	Accuracy over temperature	$V_{OUT(NOM)}$ + 0.1 V ≤ V_{IN} ≤ 2.2 V, greater of 2.2 V or $V_{OUT(NOM)}$ + 1.4 V ≤ V_{BIAS} ≤ 5.5 V, 1 mA ≤ I_{OUT} ≤ 400 mA	T_J = –40°C to +85°C	–1.1		1	%
			T_J = –40°C to +125°C, YCK package	–2.5		1	
			T_J = –40°C to +125°C, DRV package	–2		1	
ΔV_{OUT} / ΔV_{IN}	V_{IN} line regulation	$V_{OUT(NOM)}$ + 0.1 V ≤ V_{IN} ≤ 2.2 V		–2.5	0.013	2.5	mV
ΔV_{OUT} / ΔV_{BIAS}	V_{BIAS} line regulation	$V_{OUT(NOM)}$ + 1.4 V ≤ V_{BIAS} ≤ 5.5 V		–2.5	0.02	2.5	mV
ΔV_{OUT} / ΔI_{OUT}	Load regulation	1 mA ≤ I_{OUT} ≤ 400 mA			0.49		%/A
$I_{Q(BIAS)}$	Bias pin current	I_{OUT} = 0 mA	T_J = –40°C to +85°C			30	µA
			T_J = –40°C to +125°C			41	
		I_{OUT} = 400 mA	T_J = –40°C to +125°C			6.5	mA
$I_{Q(IN)}$	Input pin current[1]	I_{OUT} = 0 mA	T_J = –40°C to +85°C			5.7	µA
			T_J = –40°C to +125°C			17	
I_{GND}	Ground pin current[1]	I_{OUT} = 400 mA			320	500	µA
$I_{SHDN(BIAS)}$	V_{BIAS} shutdown current	V_{IN} = 2.2 V, V_{BIAS} = 5.5 V, V_{EN} ≤ 0.2 V			0.264	12	µA
$I_{SHDN(IN)}$	V_{IN} shutdown current	V_{IN} = 1.8 V, V_{BIAS} = 5.5 V, V_{EN} ≤ 0.2 V, T_J = –40°C to +85°C			0.5	5.7	µA
		V_{IN} = 1.8 V, V_{BIAS} = 5.5 V, V_{EN} ≤ 0.2 V			0.5	22	
I_{CL}	Output current limit	V_{OUT} = 0.95 × $V_{OUT(NOM)}$		450	800	1100	mA
I_{SC}	Short-circuit current limit	V_{OUT} = 0 V			270		mA
$V_{DO(IN)}$	V_{IN} dropout voltage[2]	V_{IN} = 0.95 × $V_{OUT(nom)}$, I_{OUT} = 400 mA, V_{OUT} ≥ 0.6 V, DRV package			31	80	mV
		V_{IN} = 0.95 × $V_{OUT(nom)}$, I_{OUT} = 400 mA, V_{OUT} ≥ 0.6 V, YCK package			31	80	
$V_{DO(BIAS)}$	V_{BIAS} dropout voltage[2]	V_{BIAS} = greater of 1.7 V or $V_{OUT(nom)}$ + 0.6 V, V_{SENSE} = 0.95 × $V_{OUT(nom)}$, I_{OUT} = 400 mA, DRV package				1.3	V
		V_{BIAS} = greater of 1.7 V or $V_{OUT(nom)}$ + 0.6 V, V_{SENSE} = 0.95 × $V_{OUT(nom)}$, I_{OUT} = 400 mA, YCK package				1	

Copyright © 2023 Texas Instruments Incorporated

6.5 Electrical Characteristics (continued)

specified at T_J = –40°C to +125°C, V_{IN} = $V_{OUT(NOM)}$ + 0.1 V, V_{BIAS} = greater of 2.2 V or $V_{OUT(NOM)}$ + 1.4 V, I_{OUT} = 1 mA, V_{EN} = 1.0 V, C_{IN} = 1 µF, C_{OUT} = 1 µF, and C_{BIAS} = 0.1 µF, unless otherwise noted; all typical values are at T_J = 25°C

PARAMETER		TEST CONDITIONS		MIN	TYP	MAX	UNIT
V_{IN} PSRR	V_{IN} power-supply rejection ratio	f = 100 Hz	I_{OUT} = 3 mA		90		dB
			I_{OUT} = 400 mA		71		
		f = 1 kHz	I_{OUT} = 3 mA		84		
			I_{OUT} = 400 mA		73		
		f = 10 kHz	I_{OUT} = 3 mA		70		
			I_{OUT} = 400 mA		58		
		f = 100 kHz	I_{OUT} = 3 mA		53		
			I_{OUT} = 400 mA		40		
		f = 1 MHz	I_{OUT} = 3 mA		65		
			I_{OUT} = 400 mA		23		
		f = 1 MHz, V_{IN} = V_{OUT} + 150 mV	I_{OUT} = 3 mA		65		
			I_{OUT} = 400 mA		40		
V_{BIAS} PSRR	V_{BIAS} power-supply rejection ratio	f = 1 kHz,	I_{OUT} = 400 mA		65		dB
		f = 100 kHz			47		
		f = 1 MHz			26		
V_n	Output voltage noise	Bandwidth = 10 Hz to 100 kHz, V_{OUT} = 0.8 V, I_{OUT} = 400 mA			7.2		μV_{RMS}
$V_{UVLO(BIAS)}$	Bias supply UVLO	V_{BIAS} rising		1.15	1.42	1.7	V
		V_{BIAS} falling		1.0	1.3	1.64	
$V_{UVLO_HYST(BIAS)}$	Bias supply hysteresis	V_{BIAS} hysteresis			103		mV
$V_{UVLO(IN)}$	Input supply UVLO	V_{IN} rising		584	603	623	mV
		V_{IN} falling		530	552	566	
$V_{UVLO_HYST(IN)}$	Input supply hysteresis	V_{IN} hysteresis			55		mV
t_{STR}	Start-up time(3)				200		µs
$V_{HI(EN)}$	EN pin logic high voltage			0.6			V
$V_{LO(EN)}$	EN pin logic low voltage					0.25	
I_{EN}	EN pin current	EN = 5.5 V		–20	10	30	nA
$R_{PULLDOWN}$	Pulldown resistor	V_{IN} = 0.9 V, $V_{OUT(nom)}$ = 0.8 V, V_{BIAS} = 1 V, V_{EN} = 0 V, P version only			36		Ω
T_{SD}	Thermal shutdown temperature	Shutdown, temperature rising			165		°C
		Reset, temperature falling			140		

(1) This current flowing from V_{IN} to GND.
(2) Dropout is not measured for V_{OUT} < 0.6 V. V_{BIAS} must be 2.2 V or greater for specified dropout value.
(3) Startup time = time from EN assertion to 0.95 × $V_{OUT(NOM)}$.

6.6 Switching Characteristics

specified at T_J = –40°C to +85°C, V_{IN} = $V_{OUT(NOM)}$ + 0.1 V, V_{BIAS} = greater of 2.2 V or $V_{OUT(NOM)}$ + 1.4 V, I_{OUT} = 1 mA, V_{EN} = 1.0 V, C_{IN} = 1 µF, C_{OUT} = 1 µF, and C_{BIAS} = 0.1 µF (unless otherwise noted); all typical values are at T_J = 25°C; all transient numbers are over multiple load and line pulses. 100µs on (high load) / 100µs off (low load)

PARAMETER		TEST CONDITIONS		MIN	TYP	MAX	UNIT
ΔV_{OUT}	Line transient(1)	V_{IN} = ($V_{OUT(NOM)}$ + 0.1 V) to 2.1 V	Transition time, t_R = 1 V / µs			1	%V_{OUT}
		V_{IN} = 2.1 V to ($V_{OUT(NOM)}$ + 0.1 V)	Transition time, t_F = 1 V / µs	–1			

Copyright © 2023 Texas Instruments Incorporated

6.6 Switching Characteristics (continued)

specified at T_J = –40°C to +85°C, V_{IN} = $V_{OUT(NOM)}$ + 0.1 V, V_{BIAS} = greater of 2.2 V or $V_{OUT(NOM)}$ + 1.4 V, I_{OUT} = 1 mA, V_{EN} = 1.0 V, C_{IN} = 1 µF, C_{OUT} = 1 µF, and C_{BIAS} = 0.1 µF (unless otherwise noted); all typical values are at T_J = 25°C; all transient numbers are over multiple load and line pulses. 100µs on (high load) / 100µs off (low load)

PARAMETER		TEST CONDITIONS		MIN	TYP	MAX	UNIT
ΔV_{OUT}	Load transient(1)	I_{OUT} = 1 mA to 250 mA	Transition time, t_R = 10 µs, t_F = 10 µs, t_{OFF} = 200 µs, t_{ON} = 1 ms, C_{IN} = 2 µF, C_{OUT} = 2 µF	–5			%V_{OUT}
		I_{OUT} = 250 mA to 1 mA				5	

(1) This specification is verified by design.

Copyright © 2023 Texas Instruments Incorporated

6.7 Typical Characteristics

at operating temperature T_J = 25°C, $V_{OUT(NOM)}$ = 0.9 V, V_{IN} = $V_{OUT(NOM)}$ + 0.1 V, V_{BIAS} = $V_{OUT(NOM)}$ + 1.4 V, I_{OUT} = 1 mA, V_{EN} = V_{IN}, C_{IN} = 1 µF, C_{OUT} = 1 µF, and C_{BIAS} = 0.1 µF (unless otherwise noted)

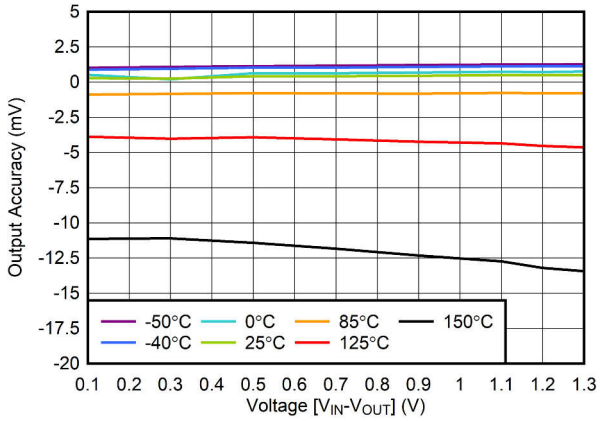

图 6-1. Output Voltage Accuracy vs V_{IN}

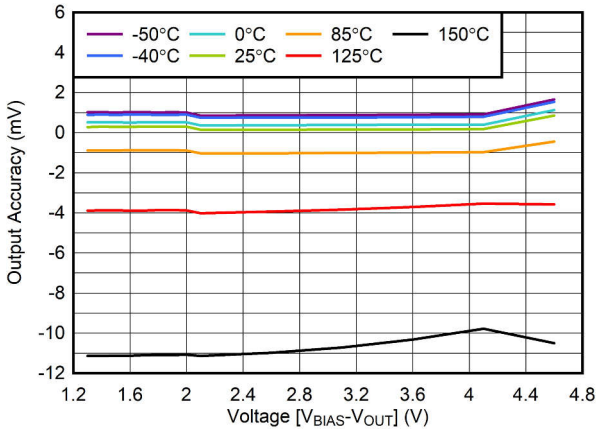

图 6-2. Output Voltage Accuracy vs V_{BIAS}

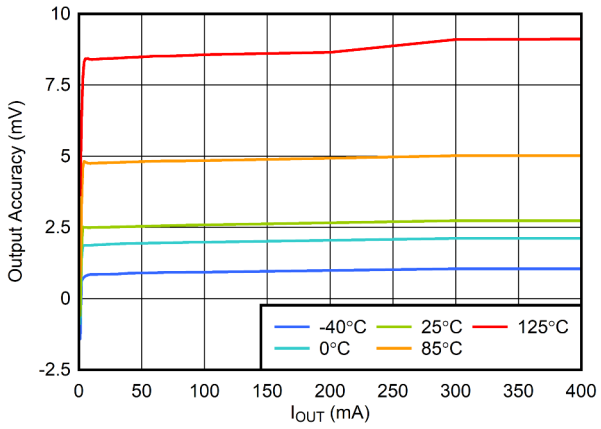

图 6-3. Output Voltage Accuracy vs I_{OUT}

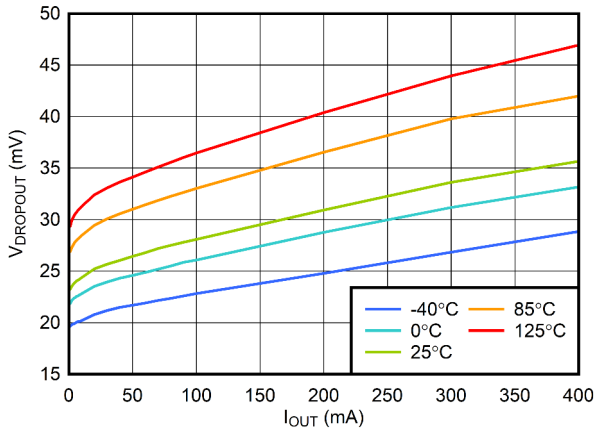

图 6-4. V_{IN} Dropout Voltage vs I_{OUT}

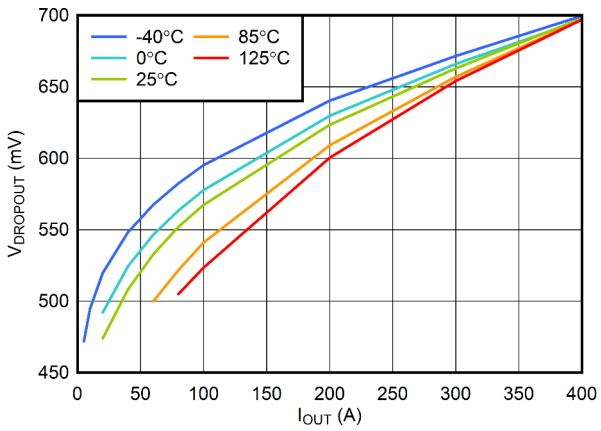

图 6-5. V_{BIAS} Dropout Voltage vs I_{OUT}

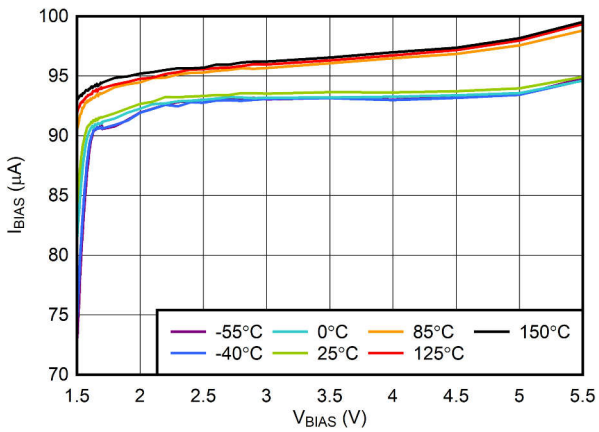

图 6-6. V_{BIAS} Input Current vs V_{BIAS}

Copyright © 2023 Texas Instruments Incorporated

6.7 Typical Characteristics (continued)

at operating temperature T_J = 25°C, $V_{OUT(NOM)}$ = 0.9 V, V_{IN} = $V_{OUT(NOM)}$ + 0.1 V, V_{BIAS} = $V_{OUT(NOM)}$ + 1.4 V, I_{OUT} = 1 mA, V_{EN} = V_{IN}, C_{IN} = 1 µF, C_{OUT} = 1 µF, and C_{BIAS} = 0.1 µF (unless otherwise noted)

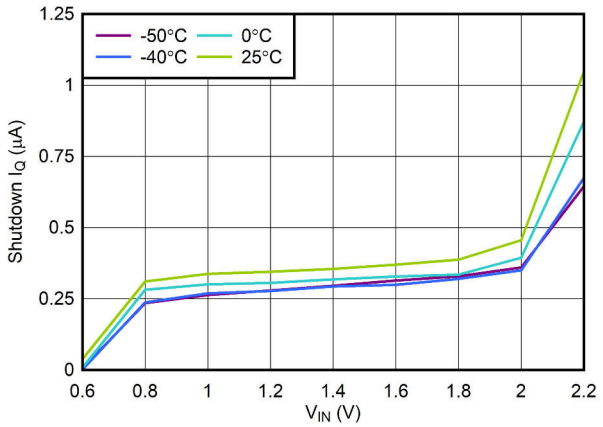

图 6-7. V_{IN} Shutdown I_Q vs V_{IN}

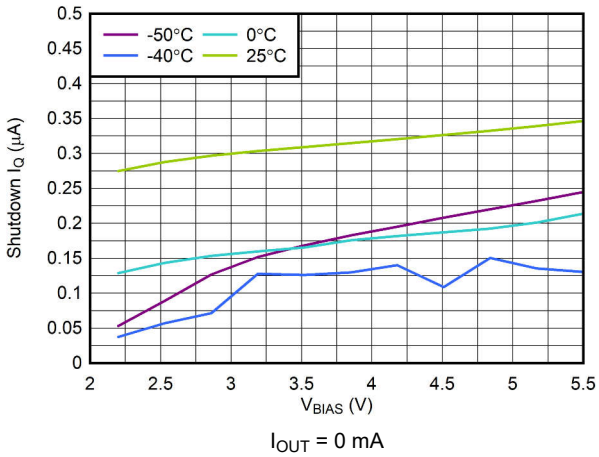

图 6-8. V_{BIAS} Shutdown I_Q vs V_{BIAS}

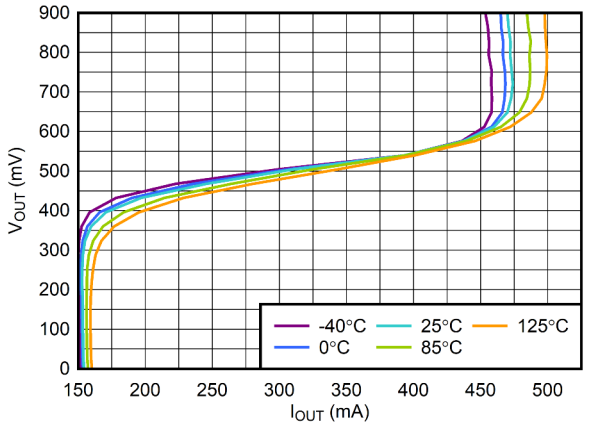

图 6-9. Foldback Current Limit vs I_{OUT}

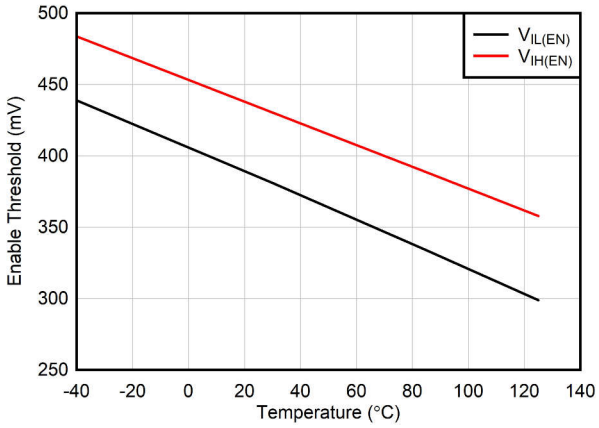

图 6-10. Enable Threshold vs Temperature

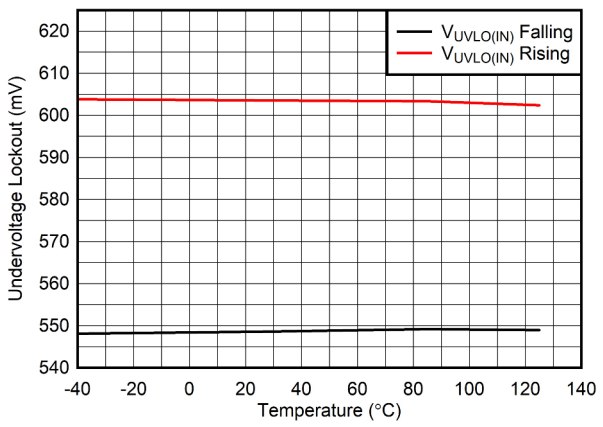

图 6-11. V_{IN} UVLO vs Temperature

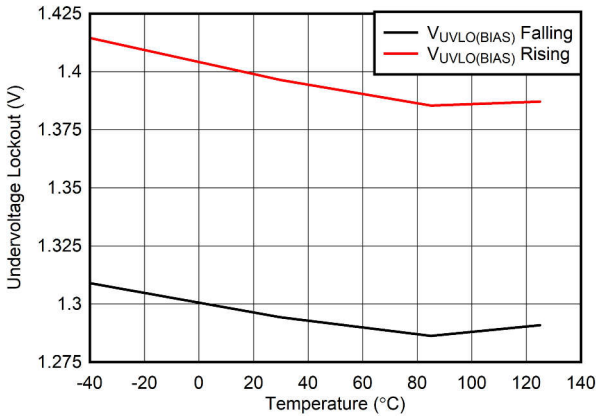

图 6-12. V_{BIAS} UVLO vs Temperature

Copyright © 2023 Texas Instruments Incorporated

6.7 Typical Characteristics (continued)

at operating temperature T_J = 25°C, $V_{OUT(NOM)}$ = 0.9 V, V_{IN} = $V_{OUT(NOM)}$ + 0.1 V, V_{BIAS} = $V_{OUT(NOM)}$ + 1.4 V, I_{OUT} = 1 mA, V_{EN} = V_{IN}, C_{IN} = 1 µF, C_{OUT} = 1 µF, and C_{BIAS} = 0.1 µF (unless otherwise noted)

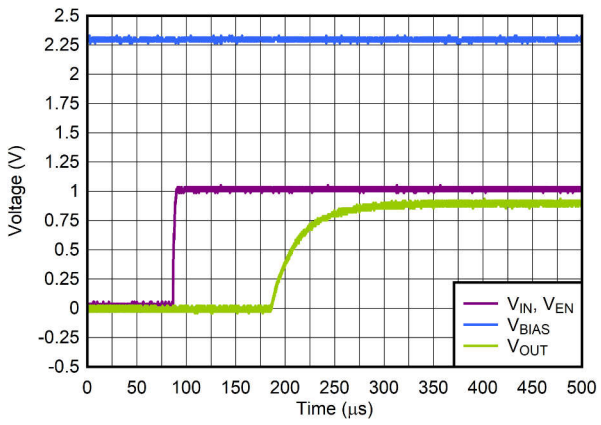

t_r = 1 µs

图 6-13. Start-Up With V_{BIAS} Before V_{IN}

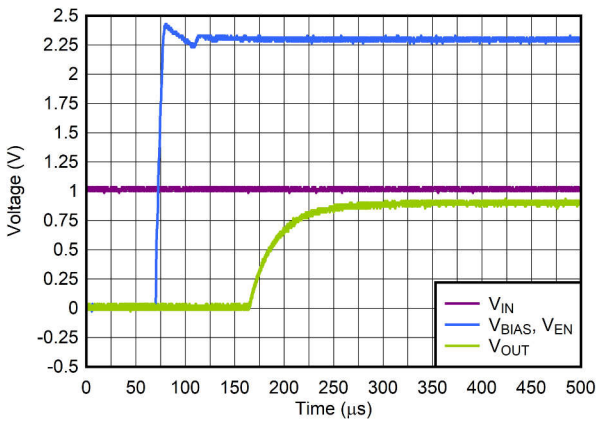

t_r = 1 µs

图 6-14. Start-Up With V_{IN} Before V_{BIAS} and V_{EN}

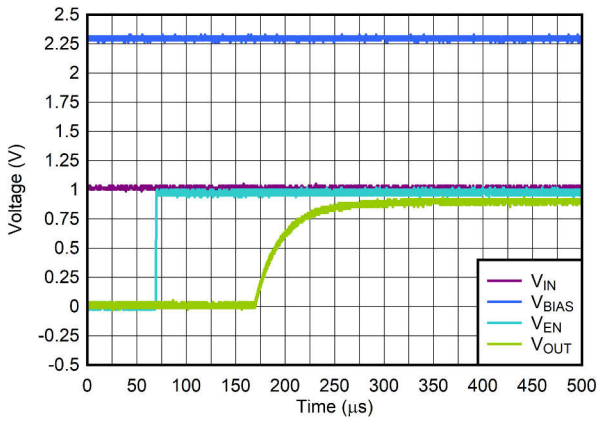

t_r = 1 µs

图 6-15. Start-Up With V_{IN} and V_{BIAS} Before V_{EN}

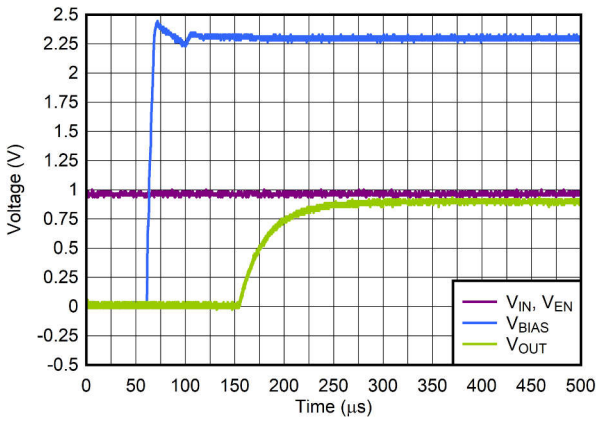

t_r = 1 µs

图 6-16. Start-Up With V_{IN} and V_{EN} Before V_{BIAS}

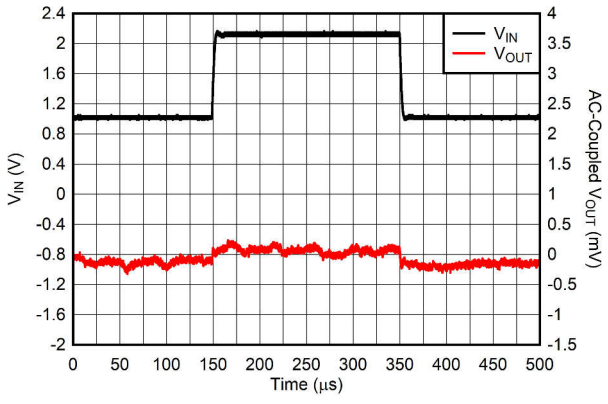

t_r = t_f = 1 µs

图 6-17. Line Transient From 1 V to 2.2 V

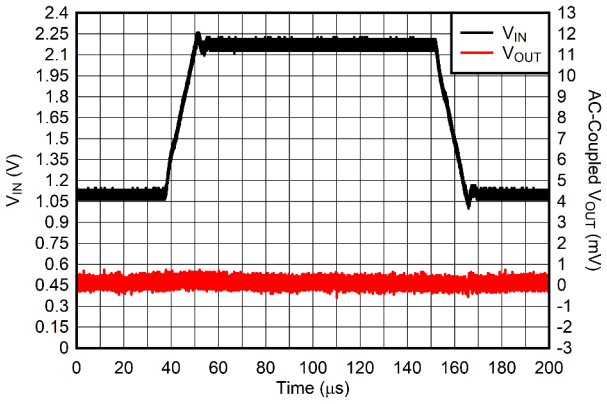

t_r = t_f = 10 µs, I_{OUT} = 400 mA

图 6-18. Line Transient From 1 V to 2.2 V

Copyright © 2023 Texas Instruments Incorporated

6.7 Typical Characteristics (continued)

at operating temperature T_J = 25°C, $V_{OUT(NOM)}$ = 0.9 V, V_{IN} = $V_{OUT(NOM)}$ + 0.1 V, V_{BIAS} = $V_{OUT(NOM)}$ + 1.4 V, I_{OUT} = 1 mA, V_{EN} = V_{IN}, C_{IN} = 1 µF, C_{OUT} = 1 µF, and C_{BIAS} = 0.1 µF (unless otherwise noted)

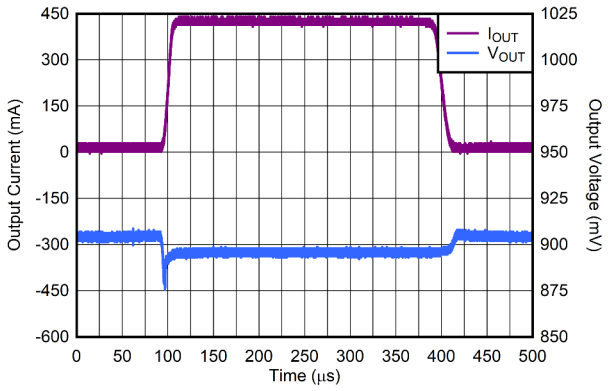

t_r = t_f = 10 µs

图 6-19. Load Transient From 100 µA to 400 mA

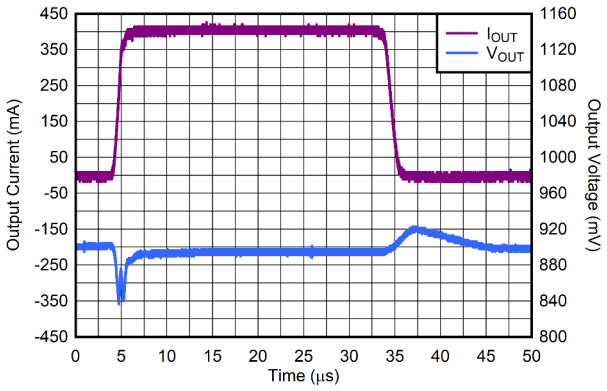

t_r = t_f = 1 µs

图 6-20. Load Transient From 100 µA to 400 mA

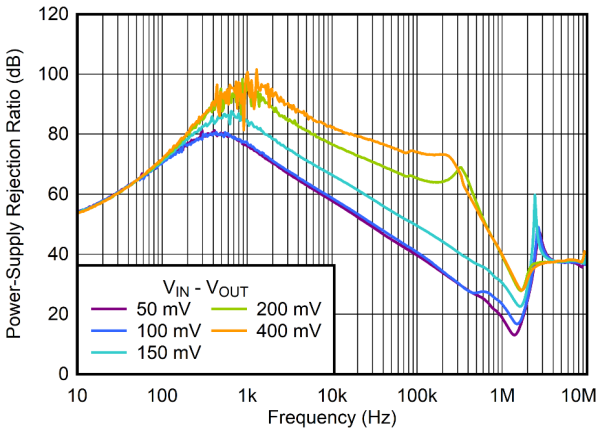

C_{IN} = 0 µF, I_{OUT} = 400 mA

图 6-21. V_{IN} PSRR vs Frequency and V_{IN} – V_{OUT}

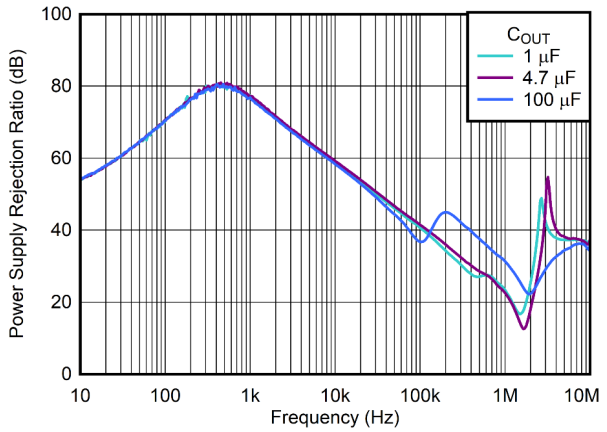

C_{IN} = 0 µF, I_{OUT} = 400 mA

图 6-22. V_{IN} PSRR vs Frequency and C_{OUT}

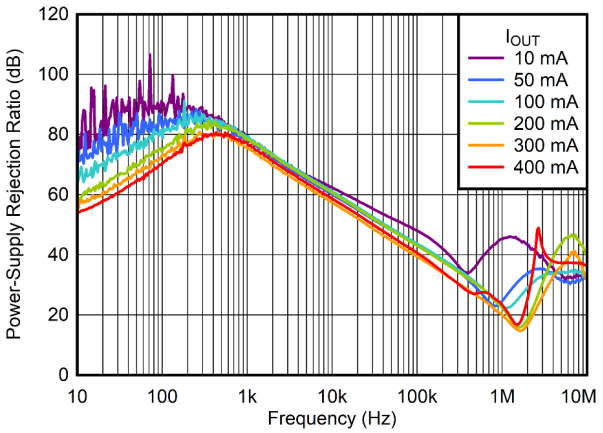

C_{IN} = 0 µF

图 6-23. V_{IN} PSRR vs Frequency and I_{OUT}

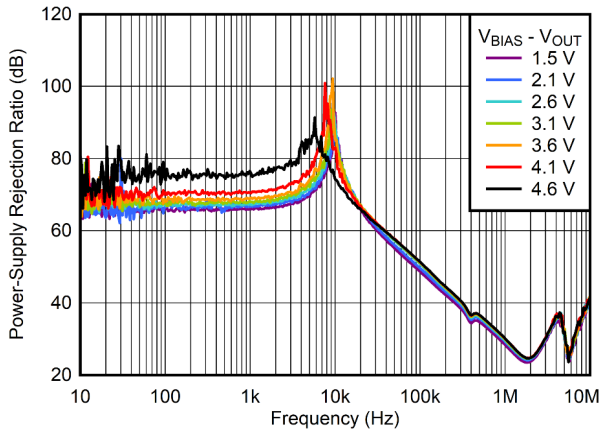

C_{BIAS} = 0 µF

图 6-24. V_{BIAS} PSRR vs Frequency and V_{BIAS} – V_{OUT}

Copyright © 2023 Texas Instruments Incorporated

6.7 Typical Characteristics (continued)

at operating temperature T_J = 25°C, $V_{OUT(NOM)}$ = 0.9 V, V_{IN} = $V_{OUT(NOM)}$ + 0.1 V, V_{BIAS} = $V_{OUT(NOM)}$ + 1.4 V, I_{OUT} = 1 mA, V_{EN} = V_{IN}, C_{IN} = 1 µF, C_{OUT} = 1 µF, and C_{BIAS} = 0.1 µF (unless otherwise noted)

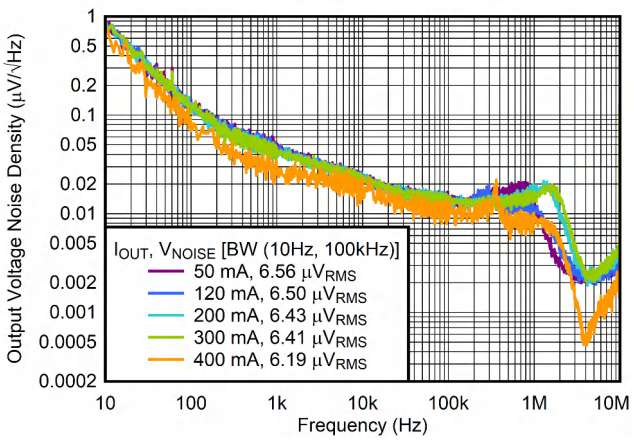

YCK package, V_{OUT} = 0.8 V

图 6-25. Output Noise vs Frequency and I_{OUT}

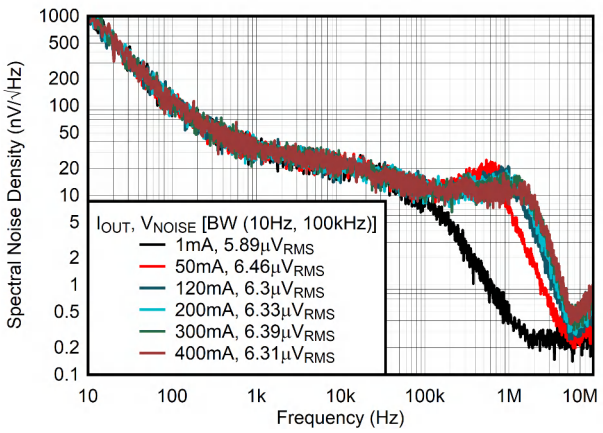

DRV package, V_{OUT} = 1.8 V, V_{BIAS} = 5 V, C_{OUT} = 2.2 µF

图 6-26. Output Noise vs Frequency and I_{OUT}

7 Detailed Description

7.1 Overview

The TPS7A15 is a low-input, ultra-low dropout, low-quiescent-current linear regulator that is optimized for excellent transient performance. These characteristics make the device ideal for most battery-powered applications. The low operating V_{IN} – V_{OUT} voltage combined with the BIAS pin dramatically improve the efficiency of low-voltage output applications by powering the voltage reference and control circuitry and allowing the use of a pre-regulated, low-voltage input supply (IN) for the main power path. This low-dropout regulator (LDO) offers foldback current limit, shutdown, thermal protection, and active discharge.

7.2 Functional Block Diagram

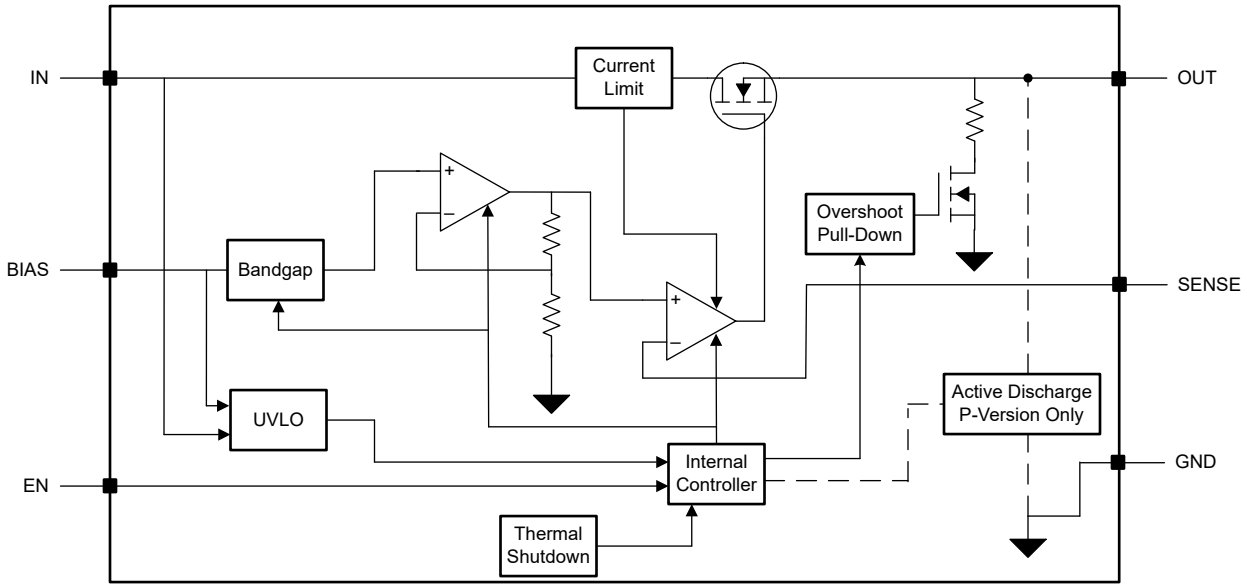

Copyright © 2023 Texas Instruments Incorporated

7.3 Feature Description

7.3.1 Excellent Transient Response

The TPS7A15 responds quickly to a change on the input supply (line transient) or the output current (load transient) given the device high input impedance and low output impedance across frequency. This same capability also means that this LDO has a high power-supply rejection ratio (PSRR) and, when coupled with a low internal noise-floor (e_n), the LDO approximates an ideal power supply with outstanding line and load transient performance.

The choice of external component values optimizes the transient response; see the *Input, Output, and Bias Capacitor Requirements* section for proper capacitor selection.

7.3.2 Active Overshoot Pulldown Circuitry

When the LDO is active (when $V_{EN} \geqslant V_{HIGH(EN)}$), and the output voltage rises above the nominal voltage, a current sink in series with a resistor connected to V_{OUT} is enabled and the output is pulled down until near to the nominal voltage. This feature helps reduce overshoot when recovering from transients.

7.3.3 Global Undervoltage Lockout (UVLO)

The TPS7A15 uses two undervoltage lockout circuits: one on the BIAS pin and one on the IN pin to prevent the device from turning on before both V_{BIAS} and V_{IN} rise above the lockout voltages. The two UVLO signals are connected internally through an AND gate, as shown in 图 7-1, that turns off the device when the voltage on either input is below the respective UVLO thresholds.

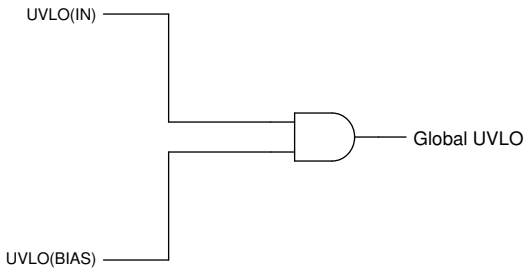

图 7-1. Global UVLO Circuit

7.3.4 Enable Input

The enable input (EN) is active high. Applying a voltage greater than $V_{EN(HI)}$ to EN enables the regulator output voltage, and applying a voltage less than $V_{EN(LOW)}$ to EN disables the regulator output. If independent control of the output voltage is not needed, connect EN to either IN or BIAS.

7.3.5 Internal Foldback Current Limit

The device has an internal current limit circuit that protects the regulator during transient high-load current faults or shorting events. The current limit is a hybrid brick-wall foldback scheme. The current limit transitions from a brick-wall scheme to a foldback scheme at the foldback voltage ($V_{FOLDBACK}$).

In a high-load current fault with the output voltage above $V_{FOLDBACK}$, the brick-wall scheme limits the output current to the current limit (I_{CL}). When the voltage drops below $V_{FOLDBACK}$, a foldback current limit activates that scales back the current as the output voltage approaches GND. When the output is shorted to GND, the device supplies a typical current called the short-circuit current limit (I_{SC}). I_{CL} and I_{SC} are listed in the *Electrical Characteristics* table.

For this device, $V_{FOLDBACK} = 60\% \times V_{OUT(nom)}$.

The output voltage is not regulated when the device is in current limit. When a current limit event occurs, the device begins to heat up because of the increase in power dissipation. When the device is in brick-wall current limit, the pass transistor dissipates power [$(V_{IN} - V_{OUT}) \times I_{CL}$]. When the device output is shorted and the output is below $V_{FOLDBACK}$, the pass transistor dissipates power [$(V_{IN} - V_{OUT}) \times I_{SC}$]. If thermal shutdown is triggered,

Copyright © 2023 Texas Instruments Incorporated

the device turns off. After the device cools down, the internal thermal shutdown circuit turns the device back on. If the output current fault condition continues, the device cycles between current limit and thermal shutdown. For more information on current limits, see the *Know Your Limits* application note.

图 7-2 shows a diagram of the foldback current limit.

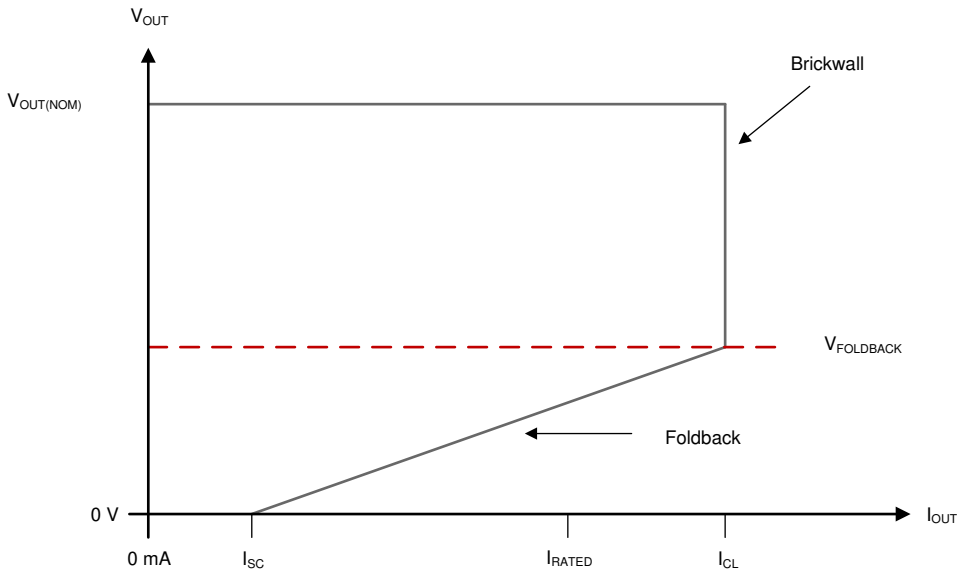

图 7-2. Foldback Current Limit

7.3.6 Active Discharge

The active discharge function uses an internal MOSFET that connects a resistor ($R_{PULLDOWN}$) to ground when the LDO is disabled in order to actively discharge the output voltage. The active discharge circuit is activated by driving EN to logic low to disable the device, when the voltage at IN or BIAS is below the UVLO threshold, or when the regulator is in thermal shutdown. Active discharge does not operate when both IN and BIAS are off, because this function requires sufficient input voltage to turn on the internal MOSFET.

The discharge time after disabling the device depends on the output capacitance (C_{OUT}) and the load resistance (R_L) in parallel with the pulldown resistor.

Do not rely on the active discharge circuit for discharging a large amount of output capacitance after the input supply has collapsed because reverse current can flow from the output to the input. This reverse current flow can cause damage to the device. Limit reverse current to no more than 5% of the device-rated current.

7.3.7 Thermal Shutdown

The internal thermal shutdown protection circuit disables the output when the thermal junction temperature (T_J) of the pass transistor rises to the thermal shutdown temperature threshold, $T_{SD(shutdown)}$ (typical). The thermal shutdown circuit hysteresis ensures that the LDO resets (turns on) when the temperature falls to $T_{SD(reset)}$ (typical).

The thermal time constant of the semiconductor die is fairly short; thus, the device can cycle on and off when thermal shutdown is reached until power dissipation is reduced. Power dissipation during start up can be high from large V_{IN} – V_{OUT} voltage drops across the device or from high inrush currents charging large output capacitors. Under some conditions, the thermal shutdown protection disables the device before start up completes.

Copyright © 2023 Texas Instruments Incorporated

For reliable operation, limit the junction temperature to the maximum listed in the *Recommended Operating Conditions* table. Operation above this maximum temperature causes the device to exceed operational specifications. Although the internal protection circuitry of the device is designed to protect against thermal overload conditions, this circuitry is not intended to replace proper heat sinking. Continuously running the device into thermal shutdown or above the maximum recommended junction temperature reduces long-term reliability.

7.4 Device Functional Modes

表 7-1 shows the conditions that lead to the different modes of operation. See the *Electrical Characteristics* table for parameter values.

表 7-1. Device Functional Mode Comparison

OPERATING MODE	PARAMETER				
	V_{IN}	V_{BIAS}	V_{EN}	I_{OUT}	T_J
Normal mode	$V_{IN} \geq V_{OUT\ (nom)} + V_{DO}$ and $V_{IN} \geq V_{IN(min)}$	$V_{BIAS} \geq V_{OUT} + V_{DO(BIAS)}$	$V_{EN} \geq V_{HI(EN)}$	$I_{OUT} < I_{CL}$	$T_J < T_{SD}$ for shutdown
Dropout mode	$V_{IN(min)} < V_{IN} < V_{OUT\ (nom)} + V_{DO(IN)}$	$V_{BIAS} < V_{OUT} + V_{DO(BIAS)}$	$V_{EN} > V_{HI(EN)}$	$I_{OUT} < I_{CL}$	$T_J < T_{SD}$ for shutdown
Disabled mode (any true condition disables the device)	$V_{IN} < V_{UVLO(IN)}$	$V_{BIAS} < V_{BIAS(UVLO)}$	$V_{EN} < V_{LO(EN)}$	—	$T_J \geq T_{SD}$ for shutdown

7.4.1 Normal Mode

The device regulates to the nominal output voltage when the following conditions are met:

- The input voltage is greater than the nominal output voltage plus the dropout voltage ($V_{OUT(nom)} + V_{DO}$)
- The bias voltage is greater than the nominal output voltage plus the dropout voltage ($V_{OUT(nom)} + V_{DO}$)
- The output current is less than the current limit ($I_{OUT} < I_{CL}$)
- The device junction temperature is less than the thermal shutdown temperature ($T_J < T_{SD(shutdown)}$)
- The enable voltage has previously exceeded the enable rising threshold voltage and has not yet decreased to less than the enable falling threshold

7.4.2 Dropout Mode

If the input voltage is lower than the nominal output voltage plus the specified dropout voltage, but all other conditions are met for normal operation, the device operates in dropout mode. Similarly, if the bias voltage is lower than the nominal output voltage plus the specified dropout voltage, but all other conditions are met for normal operation, the device operates in dropout mode as well. In this mode, the output voltage tracks the input voltage. During this mode, the transient performance of the device becomes significantly degraded because the pass transistor is in the ohmic or triode region, and acts as a switch. Line or load transients in dropout can result in large output voltage deviations.

When the device is in a steady dropout state (defined as when the device is in dropout, $V_{IN} < V_{OUT(NOM)} + V_{DO}$ or $V_{BIAS} < V_{OUT(NOM)} + V_{DO}$ directly after being in normal regulation state, but not during start up), the pass transistor is driven into ohmic or triode region. When the input voltage returns to a value greater than or equal to the nominal output voltage plus the dropout voltage ($V_{OUT(NOM)} + V_{DO}$), the output voltage can overshoot for a short time when the device pulls the pass transistor back into the linear region.

7.4.3 Disabled Mode

The output of the device can be shut down by forcing the voltage of the enable pin to less than the maximum EN pin low-level voltage (see the *Electrical Characteristics* table). When disabled, the pass transistor is turned off, internal circuits are shut down, and the output voltage is actively discharged to ground by an internal discharge circuit from the output to ground.

Copyright © 2023 Texas Instruments Incorporated

8 Application and Implementation

备注

Information in the following applications sections is not part of the TI component specification, and TI does not warrant its accuracy or completeness. TI’s customers are responsible for determining suitability of components for their purposes, as well as validating and testing their design implementation to confirm system functionality.

8.1 Application Information

Successfully implementing an LDO in an application depends on the application requirements. This section discusses key device features and how to best implement them to achieve a reliable design.

8.1.1 Recommended Capacitor Types

The regulator is designed to be stable using low equivalent series resistance (ESR) ceramic capacitors at the input, output, and bias pins. Multilayer ceramic capacitors are the industry standard for use with LDOs, but must be used with good judgment. Ceramic capacitors that use X7R-, X5R-, and COG-rated dielectric materials provide relatively good capacitive stability across temperature, whereas the use of Y5V-rated capacitors is discouraged because of large variations in capacitance. Regardless of the ceramic capacitor type selected, ceramic capacitance varies with operating voltage and temperature. Generally, assume that effective capacitance decreases by as much as 50%. The input, output, and bias capacitors recommended in the *Recommended Operating Conditions* table account for an effective capacitance of approximately 50% of the nominal value.

8.1.2 Input, Output, and Bias Capacitor Requirements

A minimum input ceramic capacitor is required for stability. A minimum output ceramic capacitor is also required for stability; see the *Recommended Operating Conditions* table for the minimum capacitor values.

The input capacitor counteracts reactive input sources and improves transient response, input ripple, and PSRR. A higher-value input capacitor can be necessary if large, fast rise-time load or line transients are anticipated, or if the device is located several inches from the input power source. Dynamic performance of the device is improved with the use of an output capacitance larger than the minimum value specified in the *Recommended Operating Conditions* table, thus use a larger capacitance than the minimum value when practical.

Although a bias capacitor is not required, good design practice is to connect a 0.1-μF ceramic capacitor from BIAS to GND. This capacitor counteracts reactive bias source effects if the source impedance is not sufficiently low. If the BIAS source is susceptible to fast voltage drops (for example, a 2-V drop in less than 1 μs) when the LDO load current is near the maximum value, the BIAS voltage drop can cause the output voltage to fall briefly. In such cases, use a BIAS capacitor large enough to slow the voltage ramp rate to less than 0.5 V/μs. For smaller or slower BIAS transients, any output voltage dips must be less than 5% of the nominal voltage.

Place the input, output, and bias capacitors as close as possible to the device to minimize the effects of trace parasitic impedance.

8.1.3 Dropout Voltage

Dropout voltage (V_{DO}) is defined as the input voltage minus the output voltage ($V_{IN} - V_{OUT}$) at the rated output current (I_{RATED}), where the pass transistor is fully on. I_{RATED} is the maximum I_{OUT} listed in the *Recommended Operating Conditions* table. The pass transistor is in the ohmic or triode region of operation, and acts as a switch. The dropout voltage indirectly specifies a minimum input voltage greater than the nominal programmed output voltage at which the output voltage is expected to stay in regulation. If the input voltage falls to less than the nominal output regulation, then the output voltage falls as well.

For a CMOS regulator, the dropout voltage is determined by the drain-source, on-state resistance ($R_{DS(ON)}$) of the pass transistor. Therefore, if the linear regulator operates at less than the rated current, the dropout voltage for that current scales accordingly. Use 方程式 1 to calculate the $R_{DS(ON)}$ of the device.

Copyright © 2023 Texas Instruments Incorporated

$$R_{DS(ON)} = \frac{V_{DO}}{I_{RATED}} \quad (1)$$

Using a bias rail enables the TPS7A15 to achieve a lower dropout voltage between IN and OUT. However, a minimum bias voltage above the nominal programmed output voltage must be maintained. 图 6-12 specifies the minimum V_{BIAS} headroom required to maintain output regulation.

8.1.4 Behavior During Transition From Dropout Into Regulation

Some applications can have transients that place this device into dropout, especially when this device can be powered from a battery with relatively high ESR. The load transient saturates the output stage of the error amplifier when the pass transistor is driven fully on, making the pass transistor function like a resistor from V_{IN} to V_{OUT}. The error amplifier response time to this load transient is limited because the error amplifier must first recover from saturation and then places the pass transistor back into active mode. During this time, V_{OUT} overshoots because the pass transistor is functioning as a resistor from V_{IN} to V_{OUT}.

When V_{IN} ramps up slowly for start up, the slow ramp-up voltage can place the device in dropout. As with many other LDOs, the output can overshoot on recovery from this condition. However, this condition is easily avoided through the use of the enable signal.

If operating under these conditions, apply a higher dc load or increase the output capacitance to reduce the overshoot. These solutions provide a path to dissipate the excess charge.

8.1.5 Device Enable Sequencing Requirement

The IN, BIAS, and EN pin voltages can be sequenced in any order without causing damage to the device. Start up is always monotonic regardless of the sequencing order or the ramp rates of the IN, BIAS, and EN pins. See the *Recommended Operating Conditions* table for proper voltage ranges of the IN, BIAS, and EN pins.

8.1.6 Load Transient Response

The load-step transient response is the output voltage response by the LDO to a step in load current while output voltage regulation is maintained. See the *Typical Characteristics* section for the typical load transient response. There are two key transitions during a load transient response: the transition from a light to a heavy load, and the transition from a heavy to a light load. The regions in Load Transient Waveform are broken down as described in this section. Regions A, E, and H are where the output voltage is in steady-state operation.

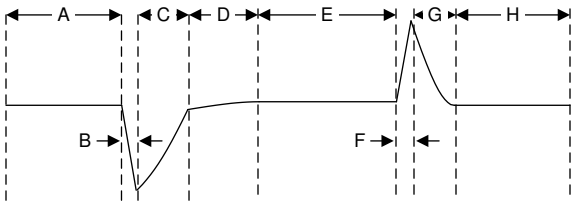

图 8-1. Load Transient Waveform

During transitions from a light load to a heavy load, the following behavior can be observed:

- Initial voltage dip is a result of the depletion of the output capacitor charge and parasitic impedance to the output capacitor (region B)
- Recovery from the dip results from the LDO increasing the sourcing current, and leads to output voltage regulation (region C)

During transitions from a heavy load to a light load, the:

- Initial voltage rise results from the LDO sourcing a large current, and leads to an increase in the output capacitor charge (region F)
- Recovery from the rise results from the LDO decreasing the sourcing current in combination with the load discharging the output capacitor (region G)

Copyright © 2023 Texas Instruments Incorporated

A larger output capacitance reduces the peaks during a load transient but slows down the response time of the device. A larger dc load also reduces the peaks because the amplitude of the transition is lowered and a higher current discharge path is provided for the output capacitor.

8.1.7 Undervoltage Lockout Circuit Operation

The V_{IN} UVLO circuit makes sure that the device remains disabled before the input supply reaches the minimum operational voltage range. The V_{IN} UVLO circuit also makes sure that the device shuts down when the input supply collapses. Similarly, the V_{BIAS} UVLO circuit makes sure that the device stays disabled before the bias supply reaches the minimum operational voltage range. The V_{BIAS} UVLO circuit also makes sure that the device shuts down when the bias supply collapses.

Typical VIN or VBIAS UVLO Circuit Operation depicts the UVLO circuit response to various input or bias voltage events. The diagram can be separated into the following parts:

- Region A: The output remains off while either the input or bias voltage is below the UVLO rising threshold.
- Region B: Normal operation, regulating device.
- Region C: Brownout event above the UVLO falling threshold (UVLO rising threshold – UVLO hysteresis). The output can possibly fall out of regulation but the device is still enabled.
- Region D: Normal operation, regulating device.
- Region E: Brownout event below the UVLO falling threshold. The device is disabled in most cases and the output falls as a result of the load and active discharge circuit. The device is reenabled when the UVLO rising threshold is reached and a normal start up follows.
- Region F: Normal operation followed by the input or bias falling to the UVLO falling threshold.
- Region G: The device is disabled when either the input or bias voltage falls below the UVLO falling threshold to 0 V. The output falls as a result of the load and active discharge circuit.

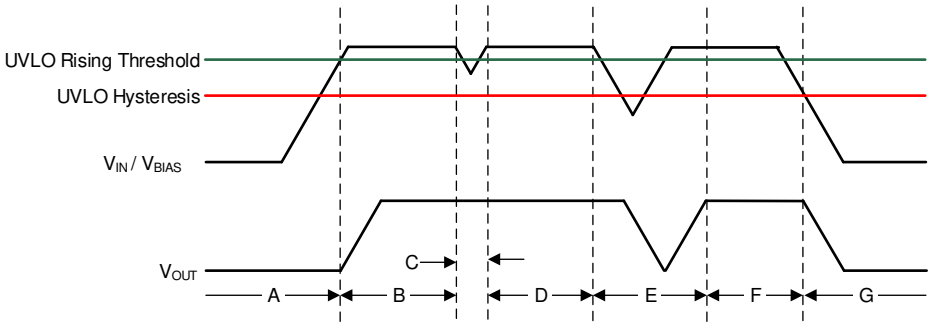

图 8-2. Typical V_{IN} or V_{BIAS} UVLO Circuit Operation

8.1.8 Power Dissipation (P_D)

Circuit reliability demands that proper consideration be given to device power dissipation, location of the circuit on the printed circuit board (PCB), and correct sizing of the thermal plane. The PCB area around the regulator must be as free as possible of other heat-generating devices that cause added thermal stresses.

方程式 2 calculates the maximum allowable power dissipation for the device in a given package:

$$P_{D\text{-}MAX} = [(T_J - T_A) / R_{\theta JA}] \quad (2)$$

方程式 3 represents the actual power being dissipated in the device:

$$P_D = [(I_{GND(IN)} + I_{IN}) \times V_{IN} + I_{GND(BIAS)} \times V_{BIAS}] - (I_{OUT} \times V_{OUT}) \quad (3)$$

If the load current is much greater than $I_{GND(IN)}$ and $I_{GND(BIAS)}$, 方程式 3 can be simplified as:

$$P_D = (V_{IN} - V_{OUT}) \times I_{OUT} \quad (4)$$

Copyright © 2023 Texas Instruments Incorporated

Power dissipation can be minimized, and thus greater efficiency achieved, by proper selection of the system voltage rails. Proper selection allows the minimum input-to-output voltage differential to be obtained. The low dropout of the TPS7A15 allows for maximum efficiency across a wide range of output voltages.

The main heat conduction path for the device depends on the ambient temperature and the thermal resistance across the various interfaces between the die junction and ambient air.

The maximum power dissipation determines the maximum allowable junction temperature (T_J) for the device. According to 方程式 5, maximum power dissipation and junction temperature are most often related by the junction-to-ambient thermal resistance ($R_{\theta JA}$) of the combined PCB and device package and the temperature of the ambient air (T_A). The equation is rearranged in 方程式 6 for output current.

$$T_J = T_A + (R_{\theta JA} \times P_D) \tag{5}$$

$$I_{OUT} = (T_J - T_A) / [R_{\theta JA} \times (V_{IN} - V_{OUT})] \tag{6}$$

Unfortunately, this thermal resistance ($R_{\theta JA}$) is highly dependent on the heat-spreading capability built into the particular PCB design, and therefore varies according to the total copper area, copper weight, and location of the planes. The $R_{\theta JA}$ recorded in the *Thermal Information* table is determined by the JEDEC standard, PCB, and copper-spreading area, and is only used as a relative measure of package thermal performance. For a well-designed thermal layout, $R_{\theta JA}$ is actually the sum of the YCK package junction-to-case (bottom) thermal resistance ($R_{\theta JC(bot)}$) plus the thermal resistance contribution by the PCB copper.

8.1.9 Estimating Junction Temperature

The JEDEC standard now recommends the use of psi (Ψ) thermal metrics to estimate the junction temperatures of the LDO when in-circuit on a typical PCB board application. These metrics are not strictly speaking thermal resistances, but rather offer practical and relative means of estimating junction temperatures. These psi metrics are determined to be significantly independent of the copper-spreading area. The key thermal metrics (Ψ_{JT} and Ψ_{JB}) are used in accordance with 方程式 7 and are given in the *Electrical Characteristics* table.

$$\Psi_{JT}: T_J = T_T + \Psi_{JT} \times P_D \text{ and}$$
$$\Psi_{JB}: T_J = T_B + \Psi_{JB} \times P_D \tag{7}$$

where:

- P_D is the power dissipated as explained in 方程式 3 and the *Power Dissipation (P_D)* section
- T_T is the temperature at the center-top of the device package
- T_B is the PCB surface temperature measured 1 mm from the device package and centered on the package edge

8.1.10 Recommended Area for Continuous Operation

The operational area of an LDO is limited by the dropout voltage, output current, junction temperature, and input voltage. The recommended area for continuous operation for a linear regulator is illustrated in 图 8-3 and can be separated into the following regions:

- Dropout voltage limits the minimum differential voltage between the input and the output ($V_{IN} - V_{OUT}$) at a given output current level; see the *Dropout Mode* section for more details.
- The rated output current limits the maximum recommended output current level. Exceeding this rating causes the device to fall out of specification.
- The rated junction temperature limits the maximum junction temperature of the device. Exceeding this rating causes the device to fall out of specification and reduces long-term reliability.
  - 图 8-3 provides the shape of the slope. The slope is nonlinear because the maximum rated junction temperature of the LDO is controlled by the power dissipation across the LDO; thus, when $V_{IN} - V_{OUT}$ increases the output current must decrease.
- The rated input voltage range governs both the minimum and maximum of $V_{IN} - V_{OUT}$.

Copyright © 2023 Texas Instruments Incorporated

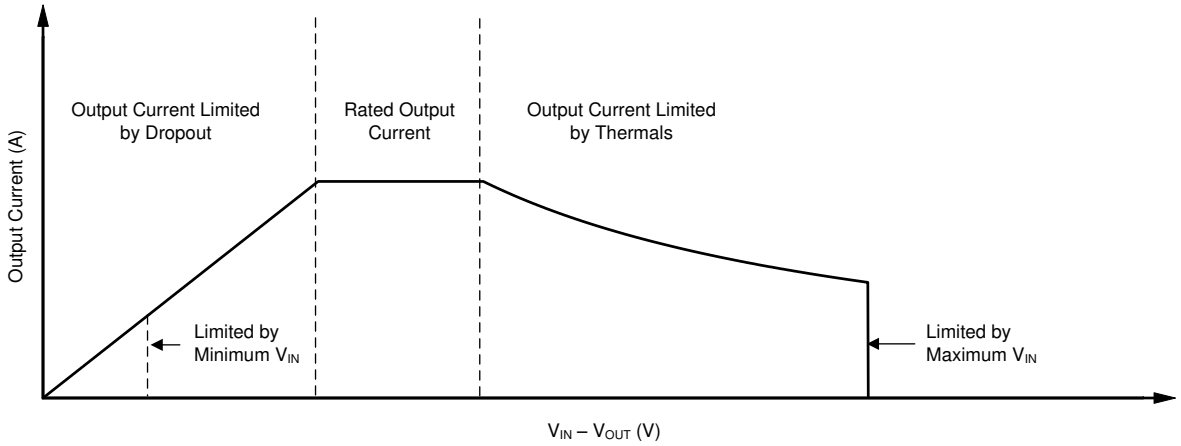

图 8-3. Continuous Operation Diagram With Description of Regions

8.2 Typical Application

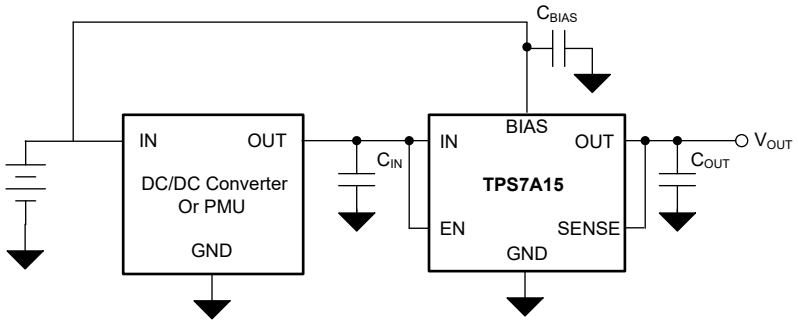

图 8-4. High-Efficiency Supply From a Rechargeable Battery

8.2.1 Design Requirements

表 8-1 lists the parameters for this design example.

表 8-1. Design Parameters

DESIGN PARAMETER	EXAMPLE VALUE
V_{IN}	1.05 V
V_{BIAS}	2.4 V to 5.5 V
V_{OUT}	0.9 V
I_{OUT}	350 mA

8.2.2 Detailed Design Procedure

This design example is powered by a rechargeable battery that can be a building block in many portable applications. Noise-sensitive portable electronics require an efficient, small-size solution for the power supply. Traditional LDOs are known for low efficiency in contrast to low-input, low-output voltage (LILO) LDOs, such as the TPS7A15. Using a bias rail in the TPS7A15 allows the device to operate at a lower input voltage, thus reducing the voltage drop across the pass transistor and maximizing device efficiency. The low voltage drop allows the efficiency of the LDO to approximate that of a DC/DC converter. 方程式 8 calculates the efficiency for this design.

$$\text{Efficiency} = \eta = P_{OUT} / P_{IN} \times 100\ \% = (V_{OUT} \times I_{OUT}) / (V_{IN} \times I_{IN} + V_{BIAS} \times I_{BIAS}) \times 100\ \% \quad (8)$$

Copyright © 2023 Texas Instruments Incorporated

方程式 8 reduces to 方程式 9 because the design example load current is much greater than the quiescent current of the bias rail.

$$\text{Efficiency} = \eta = (V_{OUT} \times I_{OUT}) / (V_{IN} \times I_{IN}) \times 100\% \quad (9)$$

For this design example, the 0.9-V output version (TPS7A1509) is selected. A nominal 1.05-V input supply comes from a DC/DC converter connected to the battery. Use a minimum 1.0-μF input capacitor to minimize the effect of resistance and inductance between the 1.05-V source and the LDO input. Use a minimum 2.2-μF output capacitor for stability and good load transient response.

The dropout voltage (VDO) is less than 80 mV maximum at a 0.9-V output voltage and 400-mA output current, so there are no dropout issues with a minimum input voltage of 1.0 V and a maximum output current of 200 mA. In addition, the TPS7A15 is designed to meet key specifications so long as the input voltage is at least 100 mV greater than the output voltage.

8.2.3 Application Curve

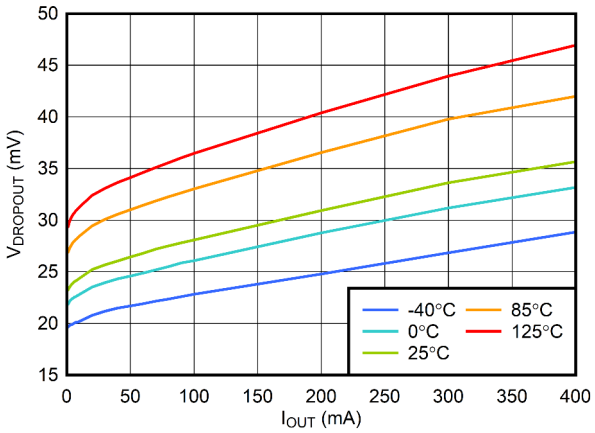

$V_{BIAS} = V_{OUT(NOM)} + 1.4$ V, $V_{EN} = V_{IN}$, $C_{IN} = 1$ μF, $C_{OUT} = 1$ μF, $C_{BIAS} = 0.1$ μF

图 8-5. V_{IN} Dropout Voltage vs I_{OUT}

8.3 Power Supply Recommendations

This LDO is designed to operate from an input supply voltage range of 0.7 V to 2.2 V and a bias supply voltage range of 2.2 V to 5.5 V. The input and bias supplies must be well regulated and free of spurious noise. To make sure that the output voltage is well regulated and dynamic performance is at optimum, the input supply must be at least $V_{OUT(nom)} + V_{DO}$ and $V_{BIAS} = V_{OUT(nom)} + V_{DO(BIAS)}$.

Copyright © 2023 Texas Instruments Incorporated

8.4 Layout

8.4.1 Layout Guidelines

For correct printed circuit board (PCB) layout, follow these guidelines:

- Place input, output, and bias capacitors as close to the device as possible
- Use copper planes for device connections to optimize thermal performance
- Place thermal vias around the device to distribute heat

8.4.2 Layout Examples

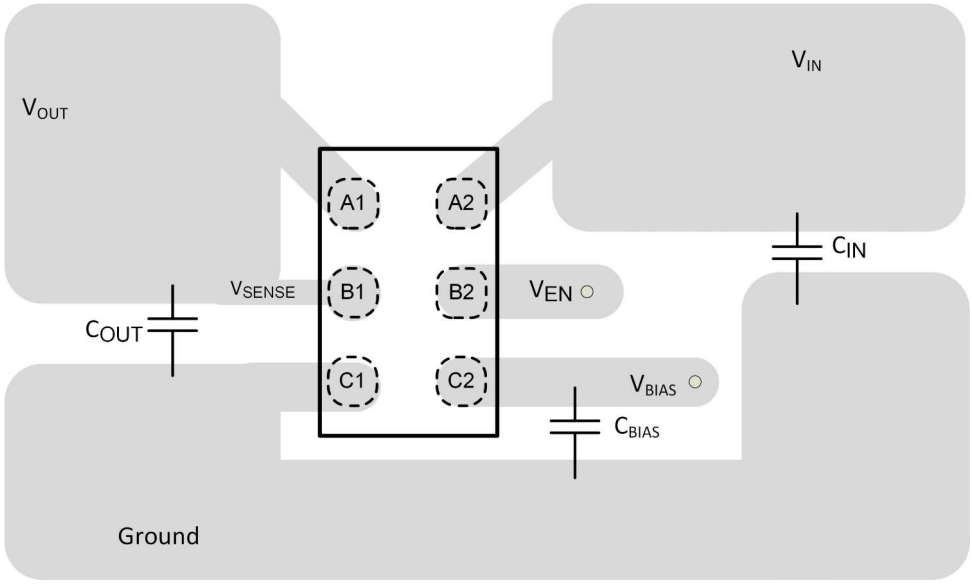

图 8-6. Recommended Layout (YCK Package)

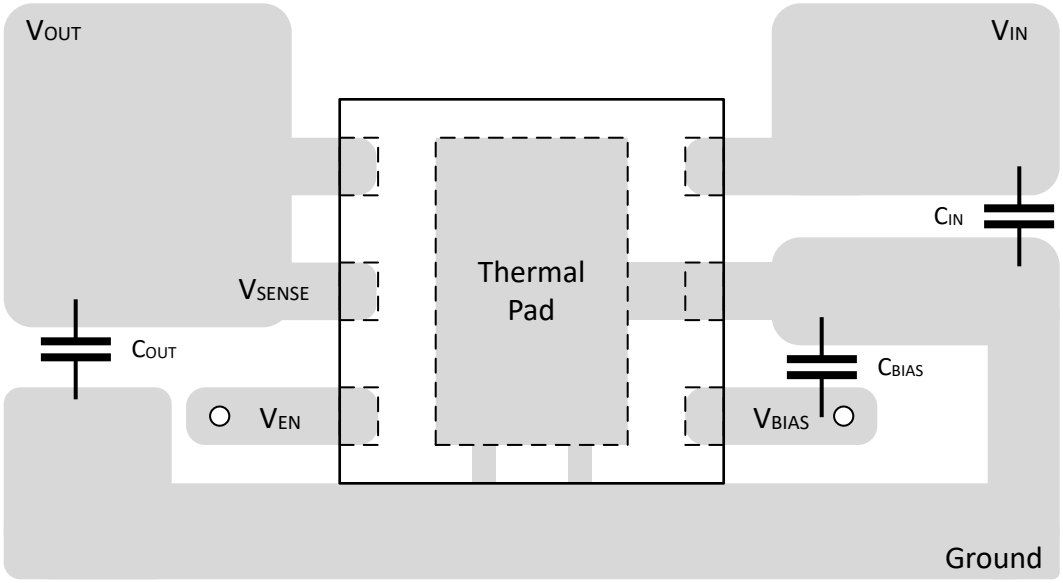

图 8-7. Recommended Layout (DRV Package)

Copyright © 2023 Texas Instruments Incorporated

9 Device and Documentation Support

9.1 Device Support

9.1.1 Development Support

9.1.1.1 Evaluation Module

An evaluation module (EVM) is available to assist in the initial circuit performance evaluation using the TPS7A15. The EVM can be requested at the Texas Instruments web site through the product folder or purchased directly from the TI eStore.

9.1.2 Device Nomenclature

表 9-1. Device Nomenclature(1) (2)

PRODUCT	DESCRIPTION
TPS7A15**xx(x)(P)yyyz**	**xx(x)** is the nominal output voltage. Two or more digits are used in the ordering number (for example, 09 = 0.9 V; 95 = 0.95 V; 125 = 1.25 V). **P** indicates an active pull down; if there is no P, then the device does not have the active pull-down feature. **yyy** is the package designator. **z** is the package quantity. R is for reel (12000 pieces for YBK package; 3000 pieces for DRV package).

(1) For the most current package and ordering information see the *Package Option Addendum* at the end of this document, or visit the device product folder on www.ti.com.
(2) Output voltages from 0.5 V to 2.0 V in 25-mV increments are available. Contact TI for details and availability.

9.2 Documentation Support

9.2.1 Related Documentation

For related documentation see the following:

- Texas Instruments, *Using New Thermal Metrics* application note
- Texas Instruments, *AN-1112 DSBGA Wafer Level Chip Scale Package* application note
- Texas Instruments, *TPS7A15EVM-096 Evaluation Module* user guide

9.3 接收文档更新通知

要接收文档更新通知，请导航至 ti.com 上的器件产品文件夹。点击*订阅更新* 进行注册，即可每周接收产品信息更改摘要。有关更改的详细信息，请查看任何已修订文档中包含的修订历史记录。

9.4 支持资源

TI E2E™ 支持论坛是工程师的重要参考资料，可直接从专家获得快速、经过验证的解答和设计帮助。搜索现有解答或提出自己的问题可获得所需的快速设计帮助。

链接的内容由各个贡献者“按原样”提供。这些内容并不构成 TI 技术规范，并且不一定反映 TI 的观点；请参阅 TI 的《使用条款》。

9.5 Trademarks

TI E2E™ is a trademark of Texas Instruments.
所有商标均为其各自所有者的财产。

9.6 静电放电警告

静电放电 (ESD) 会损坏这个集成电路。德州仪器 (TI) 建议通过适当的预防措施处理所有集成电路。如果不遵守正确的处理和安装程序，可能会损坏集成电路。

ESD 的损坏小至导致微小的性能降级，大至整个器件故障。精密的集成电路可能更容易受到损坏，这是因为非常细微的参数更改都可能会导致器件与其发布的规格不相符。

9.7 术语表

TI 术语表　　本术语表列出并解释了术语、首字母缩略词和定义。

Copyright © 2023 Texas Instruments Incorporated

10 Mechanical, Packaging, and Orderable Information

The following pages include mechanical, packaging, and orderable information. This information is the most current data available for the designated devices. This data is subject to change without notice and revision of this document. For browser-based versions of this data sheet, refer to the left-hand navigation.

Copyright © 2023 Texas Instruments Incorporated

10.1 Mechanical Data

YCK0006-C02

PACKAGE OUTLINE

DSBGA - 0.33 mm max height

DIE SIZE BALL GRID ARRAY

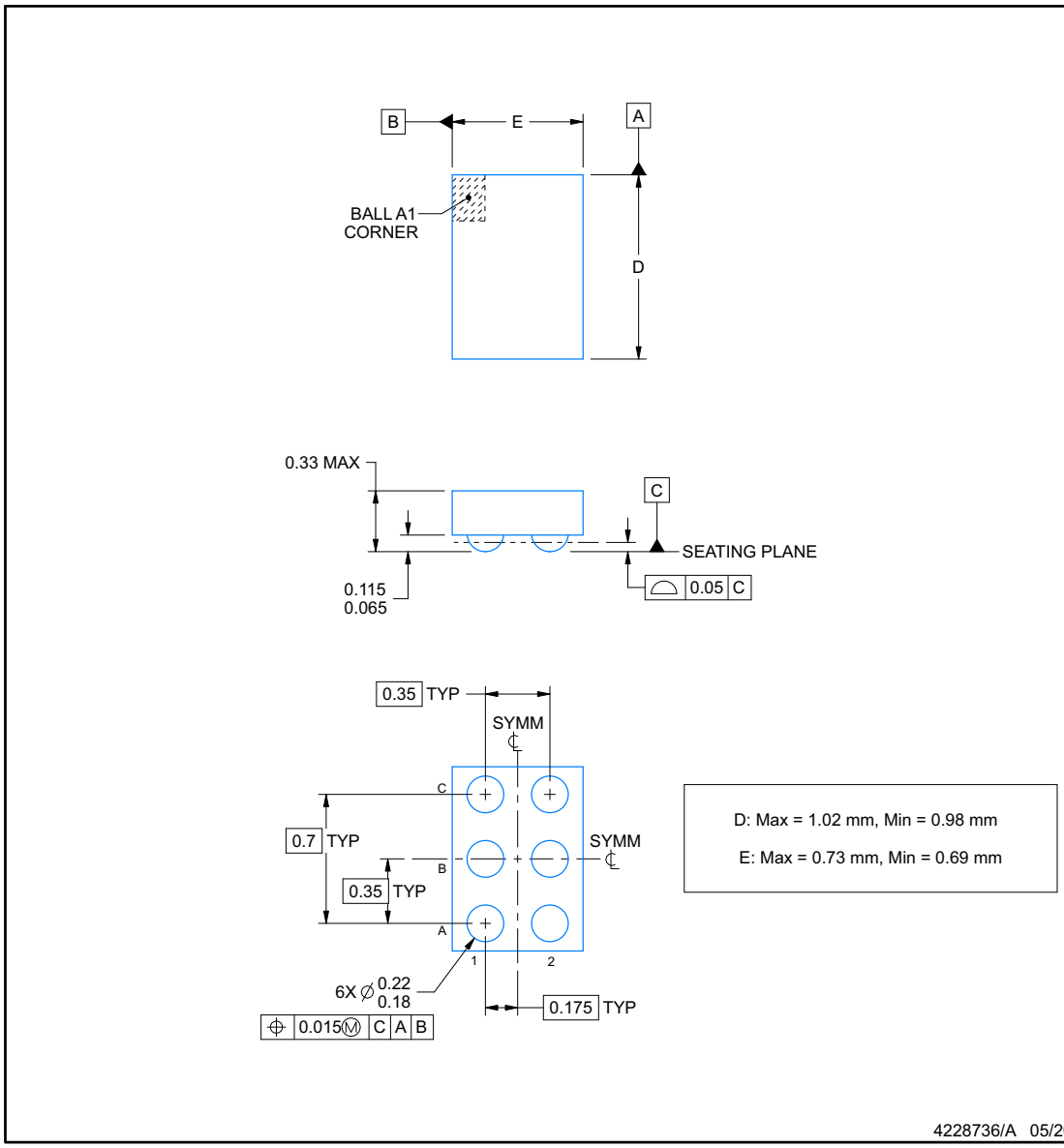

NOTES:

1. All linear dimensions are in millimeters. Any dimensions in parenthesis are for reference only. Dimensioning and tolerancing per ASME Y14.5M.
2. This drawing is subject to change without notice.

EXAMPLE BOARD LAYOUT

YCK0006-C02

DSBGA - 0.33 mm max height

DIE SIZE BALL GRID ARRAY

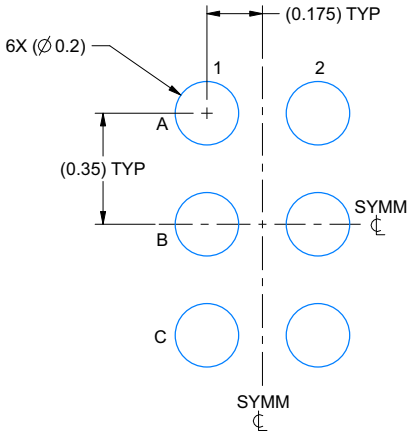

LAND PATTERN EXAMPLE
EXPOSED METAL SHOWN
SCALE: 50X

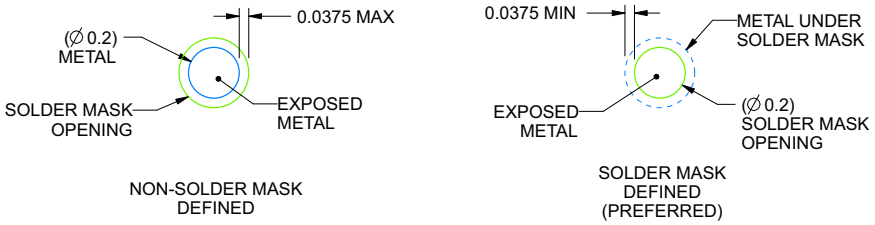

SOLDER MASK DETAILS
NOT TO SCALE

4228736/A 05/2022

NOTES: (continued)

3. Final dimensions may vary due to manufacturing tolerance considerations and also routing constraints. See Texas Instruments Literature No. SNVA009 (www.ti.com/lit/snva009).

Copyright © 2023 Texas Instruments Incorporated

EXAMPLE STENCIL DESIGN

YCK0006-C02

DSBGA - 0.33 mm max height

DIE SIZE BALL GRID ARRAY

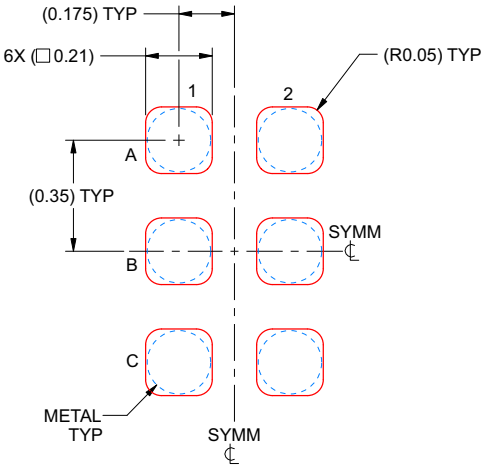

SOLDER PASTE EXAMPLE
BASED ON 0.075 mm THICK STENCIL
SCALE: 50X

4228736/A 05/2022

NOTES: (continued)

4. Laser cutting apertures with trapezoidal walls and rounded corners may offer better paste release.

Copyright © 2023 Texas Instruments Incorporated

PACKAGING INFORMATION

Orderable part number	Status (1)	Material type (2)	Package | Pins	Package qty | Carrier	RoHS (3)	Lead finish/ Ball material (4)	MSL rating/ Peak reflow (5)	Op temp (°C)	Part marking (6)
TPS7A1506PDRVR	Active	Production	WSON (DRV) | 6	3000 | LARGE T&R	Yes	SN	Level-1-260C-UNLIM	-40 to 125	38JH
TPS7A1506PDRVR.A	Active	Production	WSON (DRV) | 6	3000 | LARGE T&R	Yes	SN	Level-1-260C-UNLIM	-40 to 125	38JH
TPS7A1508PDRVR	Active	Production	WSON (DRV) | 6	3000 | LARGE T&R	Yes	NIPDAU	Level-1-260C-UNLIM	-40 to 125	36OH
TPS7A1508PDRVR.A	Active	Production	WSON (DRV) | 6	3000 | LARGE T&R	Yes	NIPDAU	Level-1-260C-UNLIM	-40 to 125	36OH
TPS7A1508PYCKR	Active	Production	DSBGA (YCK) | 6	12000 | LARGE T&R	Yes	SNAGCU	Level-1-260C-UNLIM	-40 to 125	MW
TPS7A1508PYCKR.A	Active	Production	DSBGA (YCK) | 6	12000 | LARGE T&R	Yes	SNAGCU	Level-1-260C-UNLIM	-40 to 125	MW
TPS7A1509PDRVR	Active	Production	WSON (DRV) | 6	3000 | LARGE T&R	Yes	NIPDAU	Level-1-260C-UNLIM	-40 to 125	36PH
TPS7A1509PDRVR.A	Active	Production	WSON (DRV) | 6	3000 | LARGE T&R	Yes	NIPDAU	Level-1-260C-UNLIM	-40 to 125	36PH
TPS7A1509PYCKR	Active	Production	DSBGA (YCK) | 6	12000 | LARGE T&R	Yes	SNAGCU	Level-1-260C-UNLIM	-40 to 125	MV
TPS7A1509PYCKR.A	Active	Production	DSBGA (YCK) | 6	12000 | LARGE T&R	Yes	SNAGCU	Level-1-260C-UNLIM	-40 to 125	MV
TPS7A1510PDRVR	Active	Production	WSON (DRV) | 6	3000 | LARGE T&R	Yes	NIPDAU	Level-1-260C-UNLIM	-40 to 125	36QH
TPS7A1510PDRVR.A	Active	Production	WSON (DRV) | 6	3000 | LARGE T&R	Yes	NIPDAU	Level-1-260C-UNLIM	-40 to 125	36QH
TPS7A1512PDRVR	Active	Production	WSON (DRV) | 6	3000 | LARGE T&R	Yes	NIPDAU	Level-1-260C-UNLIM	-40 to 125	36TH
TPS7A1512PDRVR.A	Active	Production	WSON (DRV) | 6	3000 | LARGE T&R	Yes	NIPDAU	Level-1-260C-UNLIM	-40 to 125	36TH
TPS7A1518PDRVR	Active	Production	WSON (DRV) | 6	3000 | LARGE T&R	Yes	NIPDAU	Level-1-260C-UNLIM	-40 to 125	36VH
TPS7A1518PDRVR.A	Active	Production	WSON (DRV) | 6	3000 | LARGE T&R	Yes	NIPDAU	Level-1-260C-UNLIM	-40 to 125	36VH

(1) **Status:** For more details on status, see our product life cycle.

(2) **Material type:** When designated, preproduction parts are prototypes/experimental devices, and are not yet approved or released for full production. Testing and final process, including without limitation quality assurance, reliability performance testing, and/or process qualification, may not yet be complete, and this item is subject to further changes or possible discontinuation. If available for ordering, purchases will be subject to an additional waiver at checkout, and are intended for early internal evaluation purposes only. These items are sold without warranties of any kind.

(3) **RoHS values:** Yes, No, RoHS Exempt. See the TI RoHS Statement for additional information and value definition.

(4) **Lead finish/Ball material:** Parts may have multiple material finish options. Finish options are separated by a vertical ruled line. Lead finish/Ball material values may wrap to two lines if the finish value exceeds the maximum column width.

(5) **MSL rating/Peak reflow:** The moisture sensitivity level ratings and peak solder (reflow) temperatures. In the event that a part has multiple moisture sensitivity ratings, only the lowest level per JEDEC standards is shown. Refer to the shipping label for the actual reflow temperature that will be used to mount the part to the printed circuit board.

(6) **Part marking:** There may be an additional marking, which relates to the logo, the lot trace code information, or the environmental category of the part.

Multiple part markings will be inside parentheses. Only one part marking contained in parentheses and separated by a "~" will appear on a part. If a line is indented then it is a continuation of the previous line and the two combined represent the entire part marking for that device.

Important Information and Disclaimer: The information provided on this page represents TI's knowledge and belief as of the date that it is provided. TI bases its knowledge and belief on information provided by third parties, and makes no representation or warranty as to the accuracy of such information. Efforts are underway to better integrate information from third parties. TI has taken and continues to take reasonable steps to provide representative and accurate information but may not have conducted destructive testing or chemical analysis on incoming materials and chemicals. TI and TI suppliers consider certain information to be proprietary, and thus CAS numbers and other limited information may not be available for release.

In no event shall TI's liability arising out of such information exceed the total purchase price of the TI part(s) at issue in this document sold by TI to Customer on an annual basis.

TAPE AND REEL INFORMATION

REEL DIMENSIONS

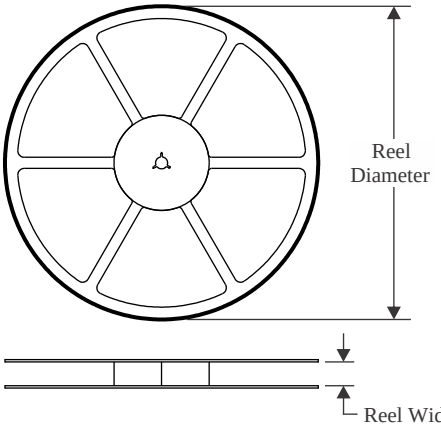

TAPE DIMENSIONS

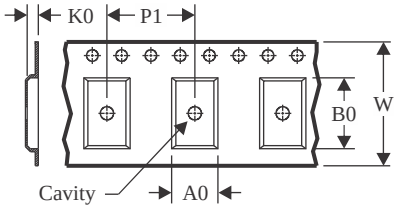

A0	Dimension designed to accommodate the component width
B0	Dimension designed to accommodate the component length
K0	Dimension designed to accommodate the component thickness
W	Overall width of the carrier tape
P1	Pitch between successive cavity centers

QUADRANT ASSIGNMENTS FOR PIN 1 ORIENTATION IN TAPE

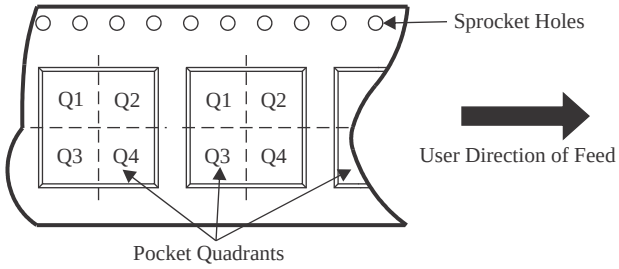

*All dimensions are nominal

Device	Package Type	Package Drawing	Pins	SPQ	Reel Diameter (mm)	Reel Width W1 (mm)	A0 (mm)	B0 (mm)	K0 (mm)	P1 (mm)	W (mm)	Pin1 Quadrant
TPS7A1506PDRVR	WSON	DRV	6	3000	180.0	8.4	2.3	2.3	1.15	4.0	8.0	Q2
TPS7A1508PDRVR	WSON	DRV	6	3000	180.0	8.4	2.3	2.3	1.15	4.0	8.0	Q2
TPS7A1508PYCKR	DSBGA	YCK	6	12000	180.0	8.4	0.8	1.1	0.34	2.0	8.0	Q1
TPS7A1508PYCKR	DSBGA	YCK	6	12000	180.0	8.4	0.8	1.1	0.34	2.0	8.0	Q1
TPS7A1509PDRVR	WSON	DRV	6	3000	180.0	8.4	2.3	2.3	1.15	4.0	8.0	Q2
TPS7A1509PYCKR	DSBGA	YCK	6	12000	180.0	8.4	0.8	1.1	0.34	2.0	8.0	Q1
TPS7A1509PYCKR	DSBGA	YCK	6	12000	180.0	8.4	0.8	1.1	0.34	2.0	8.0	Q1
TPS7A1510PDRVR	WSON	DRV	6	3000	180.0	8.4	2.3	2.3	1.15	4.0	8.0	Q2
TPS7A1512PDRVR	WSON	DRV	6	3000	180.0	8.4	2.3	2.3	1.15	4.0	8.0	Q2
TPS7A1518PDRVR	WSON	DRV	6	3000	180.0	8.4	2.3	2.3	1.15	4.0	8.0	Q2

TAPE AND REEL BOX DIMENSIONS

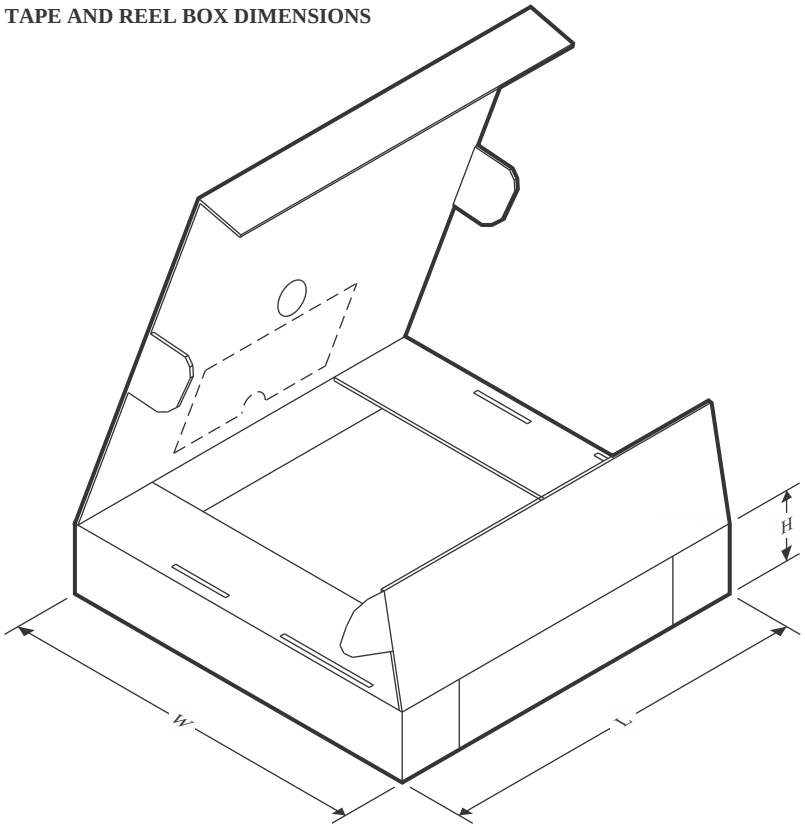

*All dimensions are nominal

Device	Package Type	Package Drawing	Pins	SPQ	Length (mm)	Width (mm)	Height (mm)
TPS7A1506PDRVR	WSON	DRV	6	3000	210.0	185.0	35.0
TPS7A1508PDRVR	WSON	DRV	6	3000	210.0	185.0	35.0
TPS7A1508PYCKR	DSBGA	YCK	6	12000	182.0	182.0	20.0
TPS7A1508PYCKR	DSBGA	YCK	6	12000	182.0	182.0	20.0
TPS7A1509PDRVR	WSON	DRV	6	3000	210.0	185.0	35.0
TPS7A1509PYCKR	DSBGA	YCK	6	12000	182.0	182.0	20.0
TPS7A1509PYCKR	DSBGA	YCK	6	12000	182.0	182.0	20.0
TPS7A1510PDRVR	WSON	DRV	6	3000	210.0	185.0	35.0
TPS7A1512PDRVR	WSON	DRV	6	3000	210.0	185.0	35.0
TPS7A1518PDRVR	WSON	DRV	6	3000	210.0	185.0	35.0

DRV 6 WSON - 0.8 mm max height

PLASTIC SMALL OUTLINE - NO LEAD

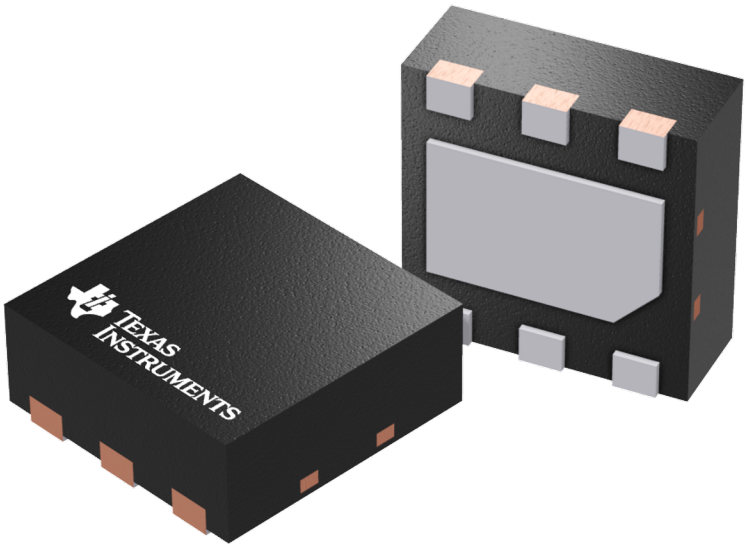

Images above are just a representation of the package family, actual package may vary.
Refer to the product data sheet for package details.

PLASTIC SMALL OUTLINE - NO LEAD

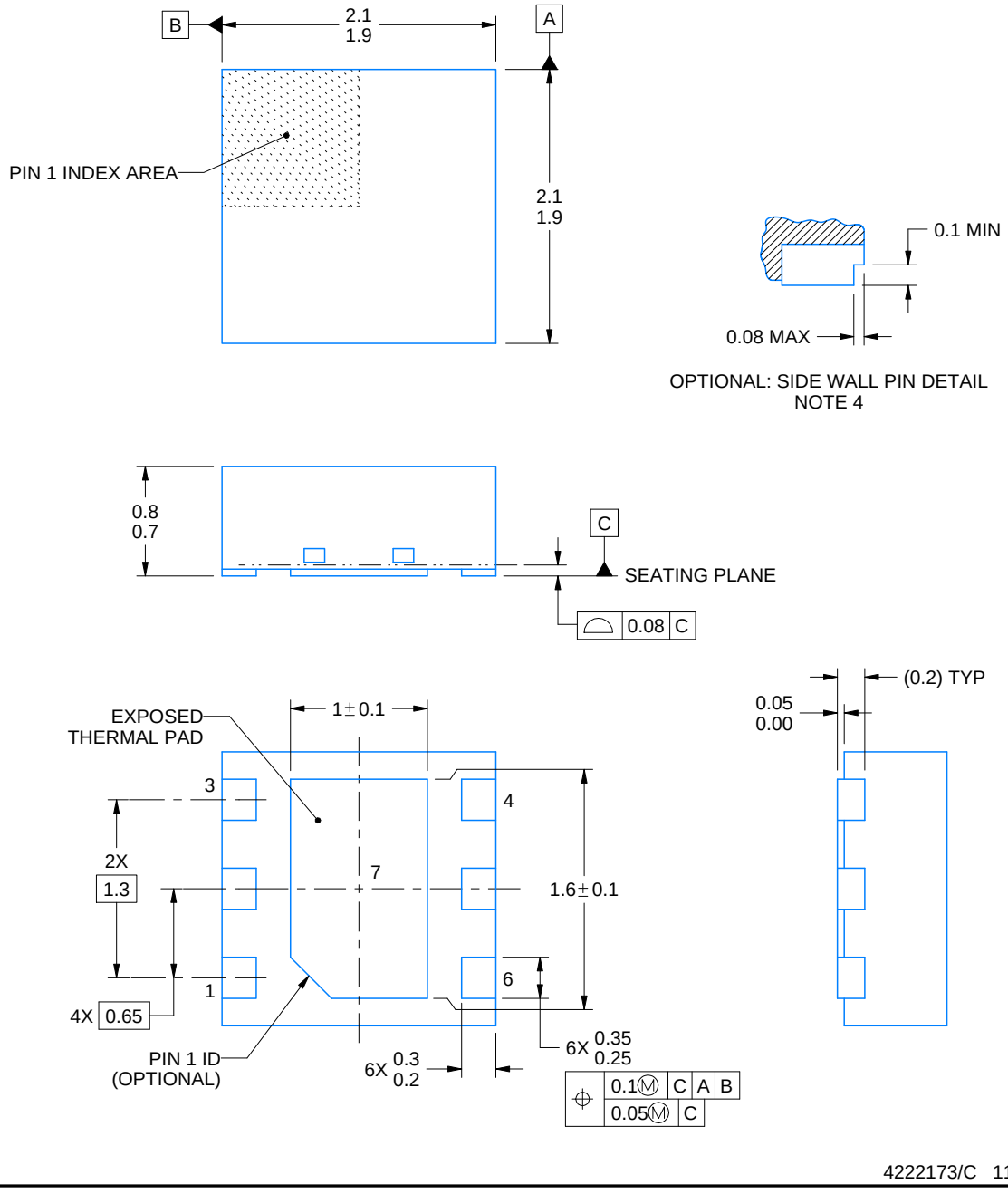

NOTES:

1. All linear dimensions are in millimeters. Any dimensions in parenthesis are for reference only. Dimensioning and tolerancing per ASME Y14.5M.
2. This drawing is subject to change without notice.
3. The package thermal pad must be soldered to the printed circuit board for thermal and mechanical performance.
4. Minimum 0.1 mm solder wetting on pin side wall. Available for wettable flank version only.

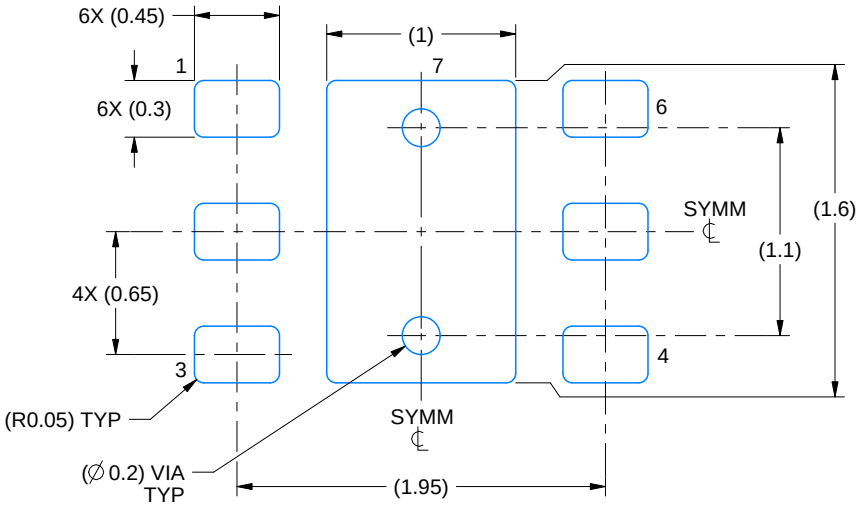

LAND PATTERN EXAMPLE
SCALE:25X

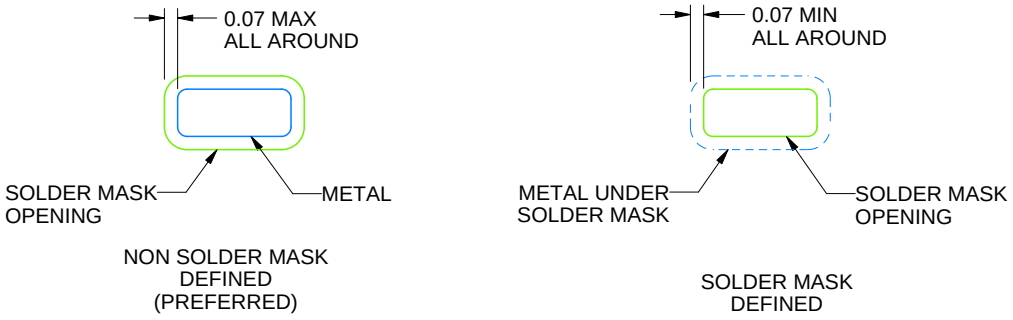

SOLDER MASK DETAILS

4222173/C 11/2025

NOTES: (continued)

5. This package is designed to be soldered to a thermal pad on the board. For more information, see Texas Instruments literature number SLUA271 (www.ti.com/lit/slua271).
6. Vias are optional depending on application, refer to device data sheet. If some or all are implemented, recommended via locations are shown.

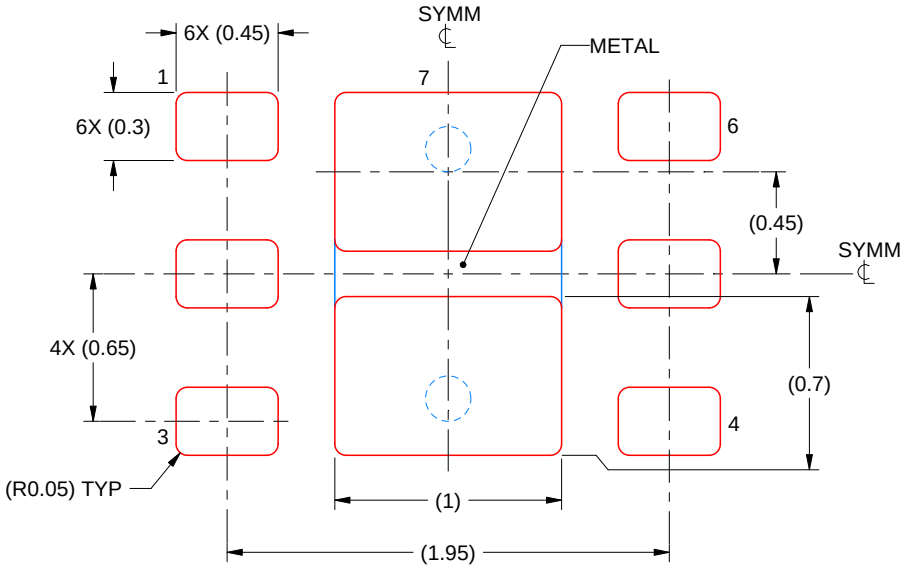

SOLDER PASTE EXAMPLE
BASED ON 0.125 mm THICK STENCIL

EXPOSED PAD #7
88% PRINTED SOLDER COVERAGE BY AREA UNDER PACKAGE
SCALE:30X

4222173/C 11/2025

NOTES: (continued)

7. Laser cutting apertures with trapezoidal walls and rounded corners may offer better paste release. IPC-7525 may have alternate design recommendations.

重要通知和免责声明

TI“按原样”提供技术和可靠性数据（包括数据表）、设计资源（包括参考设计）、应用或其他设计建议、网络工具、安全信息和其他资源，不保证没有瑕疵且不做出任何明示或暗示的担保，包括但不限于对适销性、与某特定用途的适用性或不侵犯任何第三方知识产权的暗示担保。

这些资源可供使用 TI 产品进行设计的熟练开发人员使用。您将自行承担以下全部责任：(1) 针对您的应用选择合适的 TI 产品，(2) 设计、验证并测试您的应用，(3) 确保您的应用满足相应标准以及任何其他安全、安保法规或其他要求。

这些资源如有变更，恕不另行通知。TI 授权您仅可将这些资源用于研发本资源所述的 TI 产品的相关应用。严禁以其他方式对这些资源进行复制或展示。您无权使用任何其他 TI 知识产权或任何第三方知识产权。对于因您对这些资源的使用而对 TI 及其代表造成的任何索赔、损害、成本、损失和债务，您将全额赔偿，TI 对此概不负责。

TI 提供的产品受 TI 销售条款)、TI 通用质量指南 或 ti.com 上其他适用条款或 TI 产品随附的其他适用条款的约束。TI 提供这些资源并不会扩展或以其他方式更改 TI 针对 TI 产品发布的适用的担保或担保免责声明。 除非德州仪器 (TI) 明确将某产品指定为定制产品或客户特定产品，否则其产品均为按确定价格收入目录的标准通用器件。

TI 反对并拒绝您可能提出的任何其他或不同的条款。

版权所有 © 2026，德州仪器 (TI) 公司

最后更新日期：2025 年 10 月