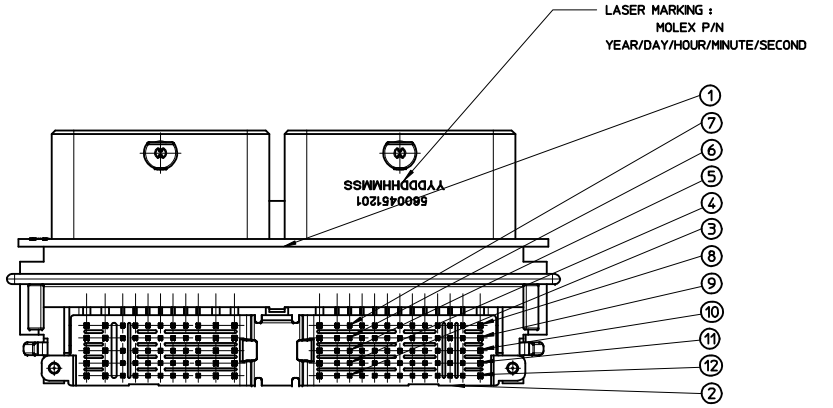

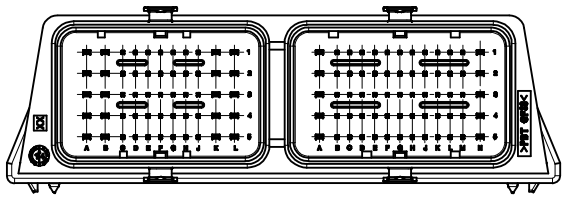

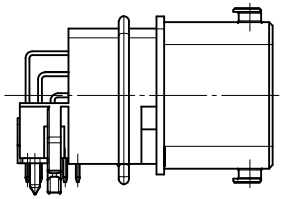

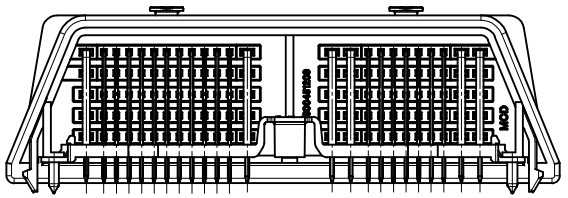

				5600451201	MOLEX P/N
				CMX HEADER RA ASSY 120CKT	DESCRIPTION
				PK-560045-001	PACKAGING
				99,05 g	WEIGTH
12	PIN 1,50 - ROW 1	COPPER ALLOY		Sn PLATING	6
11	PIN 1,50 - ROW 2				6
10	PIN 1,50 - ROW 3				6
9	PIN 1,50 - ROW 4				6
8	PIN 1,50 - ROW 5				6
7	PIN 0,64 - ROW 1	COPPER ALLOY		Sn PLATING	18
6	PIN 0,64 - ROW 2				18
5	PIN 0,64 - ROW 3				18
4	PIN 0,64 - ROW 4				18
3	PIN 0,64 - ROW 5				18
2	PIN GUIDING PLATE	>PBT-GF30<	BLACK		1
1	HEADER 120 CKT	>PBT-GF30<	BLACK		1
POS.	DESIGNATION	MATERIAL	COLOUR	SURFACE FINISH	QUANTITY

NOTES

1 - PART FREE OF SOLVENT CONTAINING SILICONE AND GREASE.

5600451201
120CKT
(SCALE 1:1)

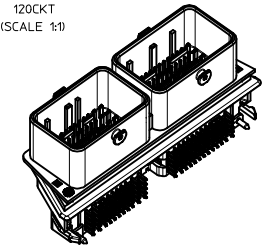

TO MODIFIE LASER MARKING
EC NO: G2015-0213 2014/12/02
DRWN:PGRANDCL 2014/12/02
CHKD:OPLESSIS 2015/10/05
APPR:SLAFAURE
DESCRIPTION
REV
A

QUALITY SYMBOLS

GENERAL TOLERANCES (UNLESS SPECIFIED)

	mm	INCH
4 PLACES	± ---	± ---
3 PLACES	± ---	± ---
2 PLACES	± 0,30	± ---
1 PLACE	± 0,25	± ---
0 PLACE	± 0,20	± ---

ANGULAR ± 2 °

DRAFT WHERE APPLICABLE MUST REMAIN WITHIN DIMENSIONS

DIMENSION STYLE: MM ONLY
SCALE: 2:1
DESIGN UNITS: METRIC
FIRST ANGLE PROJECTION

DRAWN BY	PGRANDCL	DATE 2014/06/25
CHECKED BY	OPLESSIS	DATE 2014/06/25
APPROVED BY	SLAFAURE	DATE 2014/06/26

TITLE: CMX 120W HEADER ASSEMBLED SERIAL

molex

MATERIAL NO. 5600451201
DOCUMENT NO. SD-560045-010
SHEET NO. 1 OF 2
SIZE A1

THIS DRAWING CONTAINS INFORMATION THAT IS PROPRIETARY TO MOLEX INCORPORATED AND SHOULD NOT BE USED WITHOUT WRITTEN PERMISSION

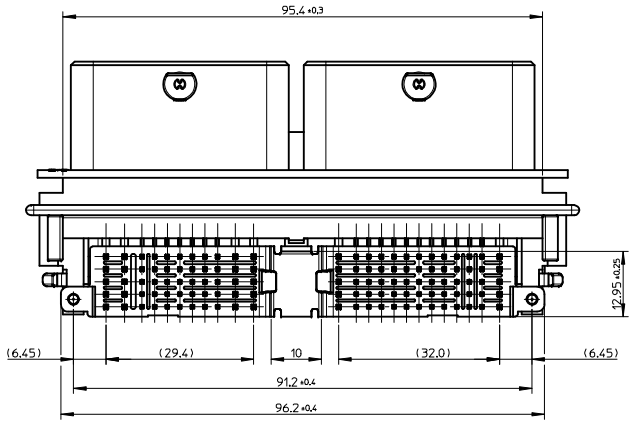

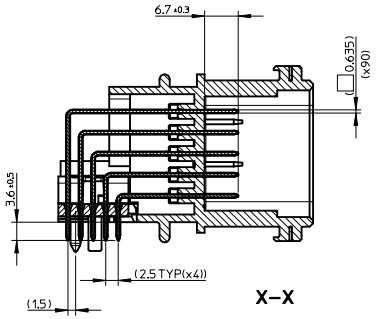

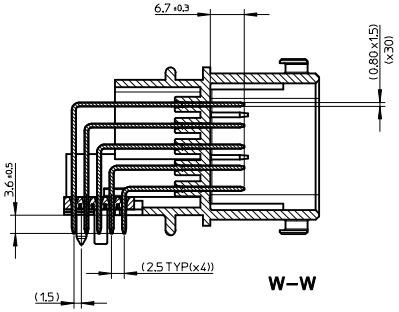

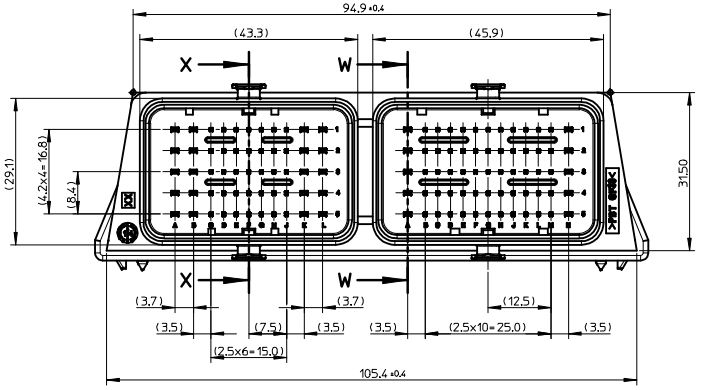

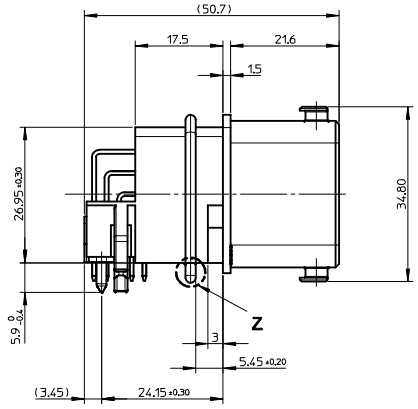

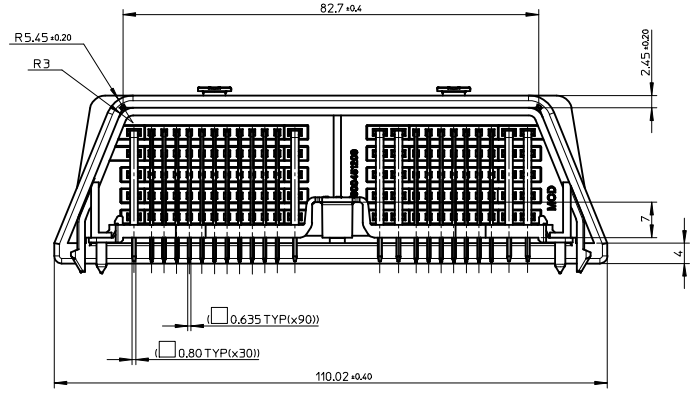

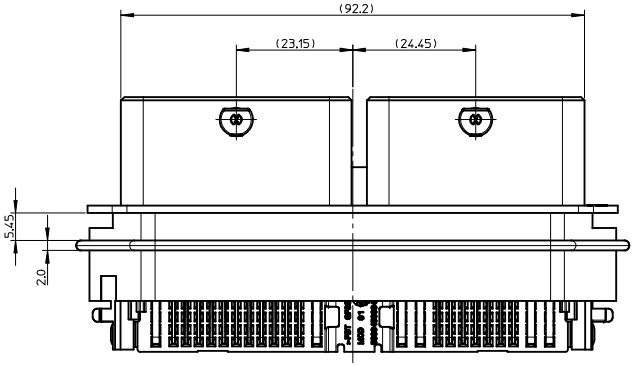

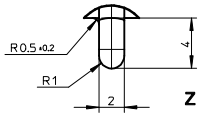

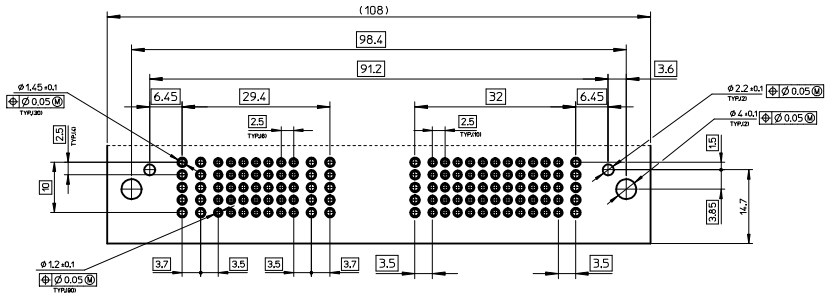

RECOMENDED PCB LAYOUT (COMPONENT SIDE)

SCALE 2:1

SEE SHEET 1
EC NO: G2015-0213

REV	DESCRIPTION	DRWN:PGRANDCL	CHKD:OPLESSIS	APPR:SLAFAURE
A		2014/12/02	2014/12/02	2015/10/05

QUALITY SYMBOLS

GENERAL TOLERANCES (UNLESS SPECIFIED)

	mm	INCH
4 PLACES	± ---	± ---
3 PLACES	± ---	± ---
2 PLACES	± 0.30	± ---
1 PLACE	± 0,25	± ---
0 PLACE	± 0,20	± ---
ANGULAR ± 2 °		

DRAFT WHERE APPLICABLE MUST REMAIN WITHIN DIMENSIONS

DIMENSION STYLE	MM ONLY
SCALE	2:1
DESIGN UNITS	METRIC
	FIRST ANGLE PROJECTION
DRAWN BY	PGRANDCL
DATE	2014/06/25
CHECKED BY	OPLESSIS
DATE	2014/06/25
APPROVED BY	SLAFAURE
DATE	2014/06/26
MATERIAL NO.	5600451201
TITLE	CMX 120W HEADER ASSEMBLED SERIAL
DOCUMENT NO.	SD-560045-010
SHEET NO.	2 OF 2
SIZE	A1

THIS DRAWING CONTAINS INFORMATION THAT IS PROPRIETARY TO MOLEX INCORPORATED AND SHOULD NOT BE USED WITHOUT WRITTEN PERMISSION