January 2024

MULTILAYER CERAMIC CAPACITORS for AUTOMOTIVE

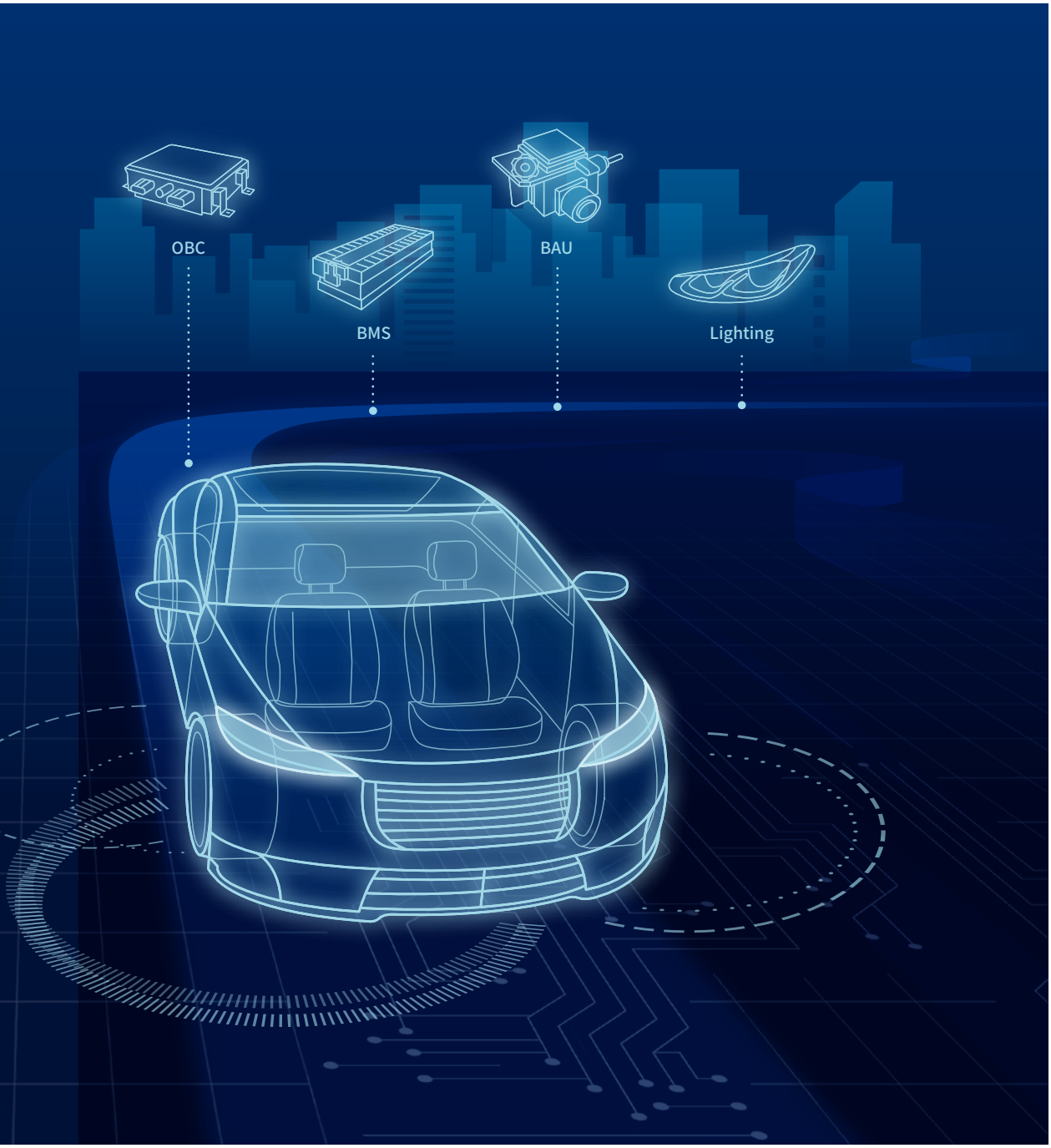



SAMSUNG ELECTRO-MECHANICS

MULTILAYER CERAMIC CAPACITORS for AUTOMOTIVE



Interactive User Guide

Samsung Electro-Mechanics' MLCC for AUTOMOTIVE Catalog was produced as an INTERACTIVE PDF that allows transferring to related webpages for better understanding of the content. Click 'HOME,' 'CONTENTS,' OR 'GO BACK TO PAGE' as needed, and it is also possible to 'PRINT' the pages. If you click the icon at the top of the page, it is possible to view a specific page of choice.

By clicking this icon, you can jump directly to the cover page of this catalog.

By clicking this icon, you can jump directly to the Table of Contents.

By clicking this icon, you can jump directly to the previous page.

By clicking this icon, you can set and print pages of your choice.

SAMSUNG ELECTRO-MECHANICS

C O N T E N T S

04 Part Numbering

06 General Capacitors
30 Mid/High Voltage Capacitors
36 High Bending Strength Capacitors
46 Fail Safe Capacitors
48 High Temperature Capacitors
52 ESD Protection Capacitors
53 Low ESL Capacitors

54 Application Guide
74 Reliability Test Conditions
78 Packaging Specifications
83 Caution/Notice
105 Components Sales Offices/Manufacturing Sites

Part Numbering

CL	10	B	105	K	B	9	V	P	N	C
1	2	3	4	5	6	7	8	9	10	11

1 SERIES CODE

CL = Multilayer Ceramic Capacitors

2 SIZE CODE

Code	Inch(mm)
03	0201(0603)
L5	0204(0510)
05	0402(1005)
10	0603(1608)

Code	Inch(mm)
21	0805(2012)
31	1206(3216)
32	1210(3225)

3 DIELECTRIC CODE

Class Ⅰ (Temperature Compensation)

Symbol	EIA Code	Operation Temperature Range (℃)	Temperature Coefficient Range (ppm/℃)
C	C0G	-55 ~ +125	0 ±30
G	X8G	-55 ~ +150	0 ±30

Class Ⅱ (High Dielectric Constant)

Symbol	EIA Code	Operation Temperature Range (℃)	Capacitance Change (△℃%)
B	X7R	-55 ~ +125	±15
Y	X7S	-55 ~ +125	±22
Z	X7T	-55 ~ +125	-33 ~ +22
E	X8L	-55 ~ +150	-40 ~ +15
M	X8M	-55 ~ +150	-50 ~ +15

4 CAPACITANCE CODE

Capacitance expressed in pF. 2 significant digits plus number of zeros. example) 107=10×10^7=100,000,000pF
For values < 10pF, Letter R denotes decimal point example) 1R5 =1.5pF

5 CAPACITANCE TOLERANCE CODE

Code	Tolerance	TCC	Capacitance series	Remark
B	±0.1pF	C0G	E-12 series*	≤2pF
C	±0.25pF	C0G	E-12 series*	≤5pF
D	±0.5pF	C0G	E-12 series*	5pF<Cp<10pF
J	±5%	C0G	E-12 series	≥10pF
K	±10%	X7R/X7S	E-6 series	
M	±20%	X7R/X7S	E-6 series	

* E-24 series is also available (necessary to be checked with Sales or Marketing department.)
※ This code has only typical specifications. Please refer to individual specifications.
※ Please contact us for tolerance which are not indicated the above table. (A: ±0.05pF F: 1% G: 2%)

Part Numbering

Code	Capacitance Step											
E-3	1.0				2.2				4.7			
E-6	1.0		1.5		2.2		3.3		4.7		6.8	
E-12	1.0	1.2	1.5	1.8	2.2	2.7	3.3	3.9	4.7	5.6	6.8	8.2
E-24	1.0	1.2	1.5	1.8	2.2	2.7	3.3	3.9	4.7	5.6	6.8	8.2
	1.1	1.3	1.6	2.0	2.4	3.0	3.6	4.3	5.1	6.2	7.5	9.1

6 RATED VOLTAGE CODE

S = 2.5V R = 4V Q = 6.3V P = 10V O = 16V A = 25V L = 35V B = 50V T = 75V C = 100V E = 250V H = 630V I = 1000V

7 THICKNESS CODE

Size inch/mm	Code	Thickness*	Tolerance
0201/0603	3	0.30	± 0.03
	S	0.30	± 0.05
	R	0.30	± 0.09
0204/0510	2	0.20	± 0.02
	4	0.43	± 0.10
0402/1005	5	0.50	± 0.05
	6	0.50	± 0.20
0603/1608	8	0.80	± 0.10
	9	0.90	± 0.10
0805/2012	6	0.60	± 0.10
	C	0.85	± 0.10
	F	1.25	± 0.10
	Q	1.25	± 0.15

Size inch/mm	Code	Thickness*	Tolerance
0805/2012	9	0.80	± 0.20
	Y	1.25	± 0.20
	B	1.25	± 0.25
1206/3216	P	1.15	± 0.10
	F	1.25	± 0.15
	W	1.05	± 0.20
	H	1.60	± 0.20
	K	1.60	± 0.30
1210/3225	U	1.80	± 0.20
	I	2.00	± 0.20
	J	2.50	± 0.20
	V	2.50	± 0.30

* In case of High Bending Strength, ESD protection capacitors, Please refer to individual specifications.
※ This code has only typical specifications. Please refer to individual specifications.

8 DESIGN CODE

Code	Inner electrode	Termination	Plating material	Design
1	Ni	Cu	Ni_Sn 100%	Standard
2	Ni	Cu	Ni_Sn 100%	Open Mode
3	Ni	Cu	Ni_Sn 100%	Float Mode
4	Ni	Cu_Ag Epoxy	Ni_Sn 100%	Standard
5	Ni	Cu_Ag Epoxy	Ni_Sn 100%	Open Mode
6	Ni	Cu_IMC Epoxy	Ni_Sn 100%	Standard
P	Ni	Cu_IMC Epoxy	Ni_Sn 100%	Open Mode
R	Ni	Cu_IMC Epoxy	Ni_Sn 100%	Float Mode
V	Ni	Cu_Cu Epoxy	Ni_Sn 100%	Standard
W	Ni	Cu_Cu Epoxy	Ni_Sn 100%	Open Mode
X	Ni	Cu_Cu Epoxy	Ni_Sn 100%	Float Mode

9 PRODUCT CODE OR SIZE CONTROL CODE

P = Automotive product meet AEC - Q200

10 CONTROL CODE

N = Standard J = High Bending Strength E = ESD Protection

11 PACKAGING CODE

Code	Type
C	Cardboard Tape, 7"reel
D/L	Cardboard Tape, 13"reel (Quantity option)*

Code	Type
E	Embossed Tape, 7"reel
F	Embossed Tape, 13"reel

* Refer to the packaging specsheet

General Capacitors General

Features

- Manufactured by state-of-the-art facilities, recommended for registration of ISO 9001 & IATF 16949
- AEC-Q200 and JEDEC-020-D qualified products.
- RoHS compliant products.
- X7R dielectric components have BME and metal-epoxy terminations with a Ni/Sn plated overcoat.
- C0G dielectric components contain BME and copper terminations with a Ni/Sn plated overcoat.

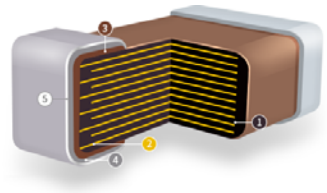

❶ Ceramic Body
❷ Electrode (Ni)
❸ Termination
(Cu or Cu+Metal Epoxy)
❹ Plating (Ni)
⑤ Plating (Sn)

Applications

- Powertrain, Safety, Body & Chassis, Convenience, Infotainment, ADAS and Electric Vehicle

Structure and Dimensions

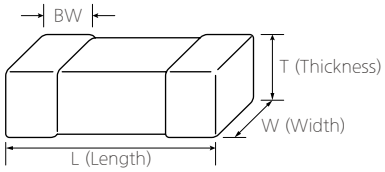

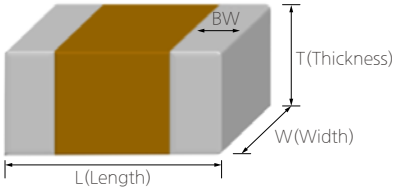

C0G

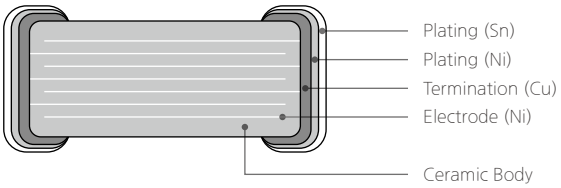

X7R Standard [VPN, 6PN] X7R Open mode [WPN]

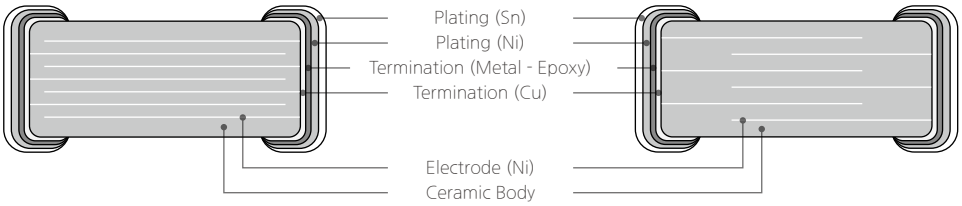

General Capacitors

Size Code	Thickness Code	Dimension (mm)				EIA (inch)
		L	W	T	BW	
03	3	0.60±0.03	0.30±0.03	0.30±0.03	0.15±0.05	0201
	S	0.60±0.05	0.30±0.05	0.30±0.05	0.15±0.05	
	R	0.60±0.09	0.30±0.09	0.30±0.09	0.15±0.05	
05	5	1.00±0.05	0.50±0.05	0.50±0.05	0.25±0.10	0402
	6	1.00±0.20	0.50±0.20	0.50±0.20	0.25±0.10	
10	8	1.60±0.10	0.80±0.10	0.80±0.10	0.30±0.20	0603
	9	1.60±0.20	0.80±0.20	0.80±0.20	0.30±0.20	
21	6	2.00±0.10	1.25±0.10	0.60±0.10	0.50+0.20/-0.30	0805
	C	2.00±0.10	1.25±0.10	0.85±0.10	0.50+0.20/-0.30	
	F	2.00±0.10	1.25±0.10	1.25±0.10	0.50+0.20/-0.30	
	Q	2.00±0.15	1.25±0.15	1.25±0.15	0.50+0.20/-0.30	
	Y	2.00±0.20	1.25±0.20	1.25±0.20	0.50+0.20/-0.30	
	B	2.00±0.25	1.25±0.25	1.25±0.25	0.50+0.20/-0.30	
31	P	3.20±0.15	1.60±0.15	1.15±0.10	0.50±0.30	1206
	W	3.20±0.20	1.60±0.20	1.05±0.20	0.50±0.30	
	H	3.20±0.20	1.60±0.20	1.60±0.20	0.50±0.30	
	K	3.20±0.30	1.60±0.30	1.60±0.30	0.50±0.30	
32	U	3.20±0.30	2.50±0.20	1.80±0.20	0.60±0.30	1210
	I	3.20±0.30	2.50±0.20	2.00±0.20	0.60±0.30	
	J	3.20±0.30	2.50±0.20	2.50±0.20	0.60±0.30	
	V	3.20±0.40	2.50±0.30	2.50±0.30	0.60±0.30	

※ This code has only typical specifications. Please refer to individual specifications.

Capacitance Table (C0G)

Category	TCC	Size Code (inch/mm)	Rated Voltage (Vdc)	Capacitance									Capacitance Range
				pF				nF			uF		
				0.1	1	10	100	1	10	100	1	10	100	
AEC-Q200 Normal	C0G (125℃)	0402/1005	50											1pF - 1nF
			100											1pF - 1nF
		0603/1608	50											1pF - 1nF
			100											1pF - 1nF
		0805/2012	50											10pF - 10nF
			100											12pF - 10nF
		1206/3216	100											4.7nF - 4.7nF

General Capacitors

Capacitance Table (X7R/X7S/X7T)

Category	TCC	Size Code (inch/mm)	Rated Voltage (Vdc)	Capacitance	Capacitance Range
				pF: 0.1 1 10 100 / nF: 1 10 100 / uF: 1 10 100	
AEC-Q200 Normal	X7R (125℃)	0201/0603	6.3		1nF - 10nF
			10		1nF - 10nF
			16		1nF – 10nF
			25		1nF – 10nF
		0402/1005	6.3		100nF - 100nF
			10		10nF - 220nF
			16		330pF - 220nF
			25		1nF - 220nF
			50		220pF - 100nF
			100		220pF - 10nF
		0603/1608	6.3		1uF - 1uF
			10		220nF - 1uF
			16		1.2nF - 1uF
			25		1nF - 1uF
			35		470nF - 1uF
			50		220pF - 1uF
			100		220pF - 100nF
		0805/2012	6.3		4.7uF - 10uF
			10		1uF - 10uF
			16		220nF - 4.7uF
			25		100nF - 4.7uF
			35		1uF - 4.7uF
			50		470pF - 2.2uF
			100		470pF - 1uF
		1206/3216	6.3		15uF - 22uF
			10		6.8uF - 22uF
			16		2.2uF - 10uF
			25		100nF - 10uF
			35		10uF - 10uF
			50		100nF - 10uF
			100		100nF - 2.2uF
		1210/3225	6.3		47uF - 47uF
			10		22uF - 22uF
			16		10uF - 22uF
			25		4.7uF - 10uF
			50		1uF - 10uF
			100		1uF - 2.2uF
	X7S (125℃)	0201/0603	4		100nF - 100nF
			6.3		22nF - 100nF
			16		100nF - 100nF
		0402/1005	6.3		220nF - 1uF
			10		220nF - 1uF
			16		220nF - 220nF
		0603/1608	6.3		2.2uF - 4.7uF
			10		1.5uF - 4.7uF
			16		1.0uF - 2.2uF
			25		2.2uF - 2.2uF

General Capacitors

Category	TCC	Size Code (inch/mm)	Rated Voltage (Vdc)	Capacitance Range
AEC-Q200 Normal	X7S (125℃)	0805/2012	6.3	6.8uF - 10uF
			10	4.7uF - 10uF
			16	10uF - 10uF
			25	2.2uF - 10uF
			35	3.3uF - 4.7uF
			50	2.2uF - 4.7uF
			100	330nF - 1uF
		1206/3216	16	22uF - 22uF
			25	10uF - 10uF
			35	6.8uF - 10uF
			50	4.7uF - 10uF
			100	2.2uF - 2.2uF
		1210/3225	4	100uF - 100uF
			6.3	47uF - 47uF
			10	47uF - 47uF
			16	22uF - 22uF
			25	15uF - 22uF
			35	10uF - 10uF
			50	6.8uF - 10uF
			75	10uF - 10uF
			100	3.3uF - 10uF
	X7T (125℃)	0201/0603	2.5	1uF - 1uF
			4	1uF - 1uF
		0603/1608	2.5	22uF - 22uF
			4	10uF - 22uF
			6.3	4.7uF - 10uF
		0805/2012	4	22uF - 22uF
			6.3	22uF - 22uF
		1206/3216	4	33uF - 47uF
			6.3	47uF - 47uF
			35	10uF - 10uF
			50	10uF - 10uF
		1210/3225	2.5	100uF - 220uF
			4	100uF - 100uF
			6.3	47uF - 100uF

General Capacitors

Product LineUp (C0G)

Size Code (inch/mm) : 0402/1005

No.	Thickness Max. (mm)	Rated Voltage (Vdc)	TCC	Capacitance	Capacitance Tolerance	Part Number
1	0.55	50	C0G	1pF	±0.1pF	CL05C010BB51PN#
2	0.55	50	C0G	1pF	±0.25pF	CL05C010CB51PN#
3	0.55	50	C0G	1.2pF	±0.1pF	CL05C1R2BB51PN#
4	0.55	50	C0G	1.2pF	±0.25pF	CL05C1R2CB51PN#
5	0.55	50	C0G	1.3pF	±0.25pF	CL05C1R3CB51PN#
6	0.55	50	C0G	1.5pF	±0.1pF	CL05C1R5BB51PN#
7	0.55	50	C0G	1.5pF	±0.25pF	CL05C1R5CB51PN#
8	0.55	50	C0G	1.8pF	±0.1pF	CL05C1R8BB51PN#
9	0.55	50	C0G	1.8pF	±0.25pF	CL05C1R8CB51PN#
10	0.55	50	C0G	2pF	±0.1pF	CL05C020BB51PN#
11	0.55	50	C0G	2pF	±0.25pF	CL05C020CB51PN#
12	0.55	50	C0G	2.2pF	±0.25pF	CL05C2R2CB51PN#
13	0.55	50	C0G	2.4pF	±0.1pF	CL05C2R4BB51PN#
14	0.55	50	C0G	2.4pF	±0.25pF	CL05C2R4CB51PN#
15	0.55	50	C0G	2.5pF	±0.1pF	CL05C2R5BB51PN#
16	0.55	50	C0G	2.5pF	±0.25pF	CL05C2R5CB51PN#
17	0.55	50	C0G	2.7pF	±0.1pF	CL05C2R7BB51PN#
18	0.55	50	C0G	2.7pF	±0.25pF	CL05C2R7CB51PN#
19	0.55	50	C0G	3pF	±0.1pF	CL05C030BB51PN#
20	0.55	50	C0G	3pF	±0.25pF	CL05C030CB51PN#
21	0.55	50	C0G	3.3pF	±0.1pF	CL05C3R3BB51PN#
22	0.55	50	C0G	3.3pF	±0.25pF	CL05C3R3CB51PN#
23	0.55	50	C0G	3.6pF	±0.25pF	CL05C3R6CB51PN#
24	0.55	50	C0G	3.9pF	±0.25pF	CL05C3R9CB51PN#
25	0.55	50	C0G	4pF	±0.1pF	CL05C040BB51PN#
26	0.55	50	C0G	4pF	±0.25pF	CL05C040CB51PN#
27	0.55	50	C0G	4.7pF	±0.1pF	CL05C4R7BB51PN#
28	0.55	50	C0G	4.7pF	±0.25pF	CL05C4R7CB51PN#
29	0.55	50	C0G	5pF	±0.1pF	CL05C050BB51PN#
30	0.55	50	C0G	5pF	±0.25pF	CL05C050CB51PN#
31	0.55	50	C0G	5pF	±0.5pF	CL05C050DB51PN#
32	0.55	50	C0G	5pF	±1pF	CL05C050FB51PN#
33	0.55	50	C0G	5.1pF	±0.1pF	CL05C5R1BB51PN#
34	0.55	50	C0G	5.1pF	±0.5pF	CL05C5R1DB51PN#
35	0.55	50	C0G	5.6pF	±0.1pF	CL05C5R6BB51PN#
36	0.55	50	C0G	5.6pF	±0.25pF	CL05C5R6CB51PN#
37	0.55	50	C0G	5.6pF	±0.5pF	CL05C5R6DB51PN#
38	0.55	50	C0G	6pF	±0.1pF	CL05C060BB51PN#
39	0.55	50	C0G	6pF	±0.25pF	CL05C060CB51PN#
40	0.55	50	C0G	6pF	±0.5pF	CL05C060DB51PN#
41	0.55	50	C0G	6pF	±1pF	CL05C060FB51PN#
42	0.55	50	C0G	6.2pF	±0.1pF	CL05C6R2BB51PN#
43	0.55	50	C0G	6.2pF	±0.25pF	CL05C6R2CB51PN#
44	0.55	50	C0G	6.8pF	±0.1pF	CL05C6R8BB51PN#
45	0.55	50	C0G	6.8pF	±0.25pF	CL05C6R8CB51PN#

General Capacitors

Size Code (inch/mm) : 0402/1005

No.	Thickness Max. (mm)	Rated Voltage (Vdc)	TCC	Capacitance	Capacitance Tolerance	Part Number
46	0.55	50	C0G	6.8pF	±0.5pF	CL05C6R8DB51PN#
47	0.55	50	C0G	7pF	±0.1pF	CL05C070BB51PN#
48	0.55	50	C0G	7pF	±0.25pF	CL05C070CB51PN#
49	0.55	50	C0G	7pF	±0.5pF	CL05C070DB51PN#
50	0.55	50	C0G	8pF	±0.1pF	CL05C080BB51PN#
51	0.55	50	C0G	8pF	±0.25pF	CL05C080CB51PN#
52	0.55	50	C0G	8pF	±0.5pF	CL05C080DB51PN#
53	0.55	50	C0G	8.2pF	±0.1pF	CL05C8R2BB51PN#
54	0.55	50	C0G	8.2pF	±0.25pF	CL05C8R2CB51PN#
55	0.55	50	C0G	8.2pF	±0.5pF	CL05C8R2DB51PN#
56	0.55	50	C0G	9pF	±0.1pF	CL05C090BB51PN#
57	0.55	50	C0G	9pF	±0.25pF	CL05C090CB51PN#
58	0.55	50	C0G	9pF	±0.5pF	CL05C090DB51PN#
59	0.55	50	C0G	10pF	±0.5pF	CL05C100DB51PN#
60	0.55	50	C0G	10pF	±1%	CL05C100FB51PN#
61	0.55	50	C0G	10pF	±2%	CL05C100GB51PN#
62	0.55	50	C0G	10pF	±5%	CL05C100JB51PN#
63	0.55	50	C0G	11pF	±5%	CL05C110JB51PN#
64	0.55	50	C0G	12pF	±1%	CL05C120FB51PN#
65	0.55	50	C0G	12pF	±5%	CL05C120JB51PN#
66	0.55	50	C0G	13pF	±1%	CL05C130FB51PN#
67	0.55	50	C0G	13pF	±2%	CL05C130GB51PN#
68	0.55	50	C0G	13pF	±5%	CL05C130JB51PN#
69	0.55	50	C0G	15pF	±1%	CL05C150FB51PN#
70	0.55	50	C0G	15pF	±2%	CL05C150GB51PN#
71	0.55	50	C0G	15pF	±5%	CL05C150JB51PN#
72	0.55	50	C0G	16pF	±1%	CL05C160FB51PN#
73	0.55	50	C0G	16pF	±2%	CL05C160GB51PN#
74	0.55	50	C0G	16pF	±5%	CL05C160JB51PN#
75	0.55	50	C0G	18pF	±1%	CL05C180FB51PN#
76	0.55	50	C0G	18pF	±5%	CL05C180JB51PN#
77	0.55	50	C0G	20pF	±2%	CL05C200GB51PN#
78	0.55	50	C0G	20pF	±5%	CL05C200JB51PN#
79	0.55	50	C0G	22pF	±1%	CL05C220FB51PN#
80	0.55	50	C0G	22pF	±2%	CL05C220GB51PN#
81	0.55	50	C0G	22pF	±5%	CL05C220JB51PN#
82	0.55	50	C0G	24pF	±5%	CL05C240JB51PN#
83	0.55	50	C0G	27pF	±1%	CL05C270FB51PN#
84	0.55	50	C0G	27pF	±5%	CL05C270JB51PN#
85	0.55	50	C0G	30pF	±1%	CL05C300FB51PN#
86	0.55	50	C0G	30pF	±2%	CL05C300GB51PN#
87	0.55	50	C0G	30pF	±5%	CL05C300JB51PN#
88	0.55	50	C0G	33pF	±1%	CL05C330FB51PN#
89	0.55	50	C0G	33pF	±2%	CL05C330GB51PN#
90	0.55	50	C0G	33pF	±5%	CL05C330JB51PN#

General Capacitors

Size Code (inch/mm) : 0402/1005

No.	Thickness Max. (mm)	Rated Voltage (Vdc)	TCC	Capacitance	Capacitance Tolerance	Part Number
91	0.55	50	C0G	39pF	±1%	CL05C390FB51PN#
92	0.55	50	C0G	39pF	±2%	CL05C390GB51PN#
93	0.55	50	C0G	39pF	±5%	CL05C390JB51PN#
94	0.55	50	C0G	47pF	±1%	CL05C470FB51PN#
95	0.55	50	C0G	47pF	±2%	CL05C470GB51PN#
96	0.55	50	C0G	47pF	±5%	CL05C470JB51PN#
97	0.55	50	C0G	51pF	±5%	CL05C510JB51PN#
98	0.55	50	C0G	56pF	±5%	CL05C560JB51PN#
99	0.55	50	C0G	68pF	±1%	CL05C680FB51PN#
100	0.55	50	C0G	68pF	±2%	CL05C680GB51PN#
101	0.55	50	C0G	68pF	±5%	CL05C680JB51PN#
102	0.55	50	C0G	82pF	±1%	CL05C820FB51PN#
103	0.55	50	C0G	82pF	±5%	CL05C820JB51PN#
104	0.55	50	C0G	100pF	±1%	CL05C101FB51PN#
105	0.55	50	C0G	100pF	±2%	CL05C101GB51PN#
106	0.55	50	C0G	100pF	±5%	CL05C101JB51PN#
107	0.55	50	C0G	120pF	±5%	CL05C121JB51PN#
108	0.55	50	C0G	150pF	±5%	CL05C151JB51PN#
109	0.55	50	C0G	180pF	±1%	CL05C181FB51PN#
110	0.55	50	C0G	180pF	±2%	CL05C181GB51PN#
111	0.55	50	C0G	180pF	±5%	CL05C181JB51PN#
112	0.55	50	C0G	220pF	±5%	CL05C221JB51PN#
113	0.55	50	C0G	270pF	±1%	CL05C271FB51PN#
114	0.55	50	C0G	270pF	±5%	CL05C271JB51PN#
115	0.55	50	C0G	330pF	±1%	CL05C331FB51PN#
116	0.55	50	C0G	330pF	±5%	CL05C331JB51PN#
117	0.55	50	C0G	390pF	±5%	CL05C391JB51PN#
118	0.55	50	C0G	470pF	±1%	CL05C471FB51PN#
119	0.55	50	C0G	470pF	±5%	CL05C471JB51PN#
120	0.55	50	C0G	560pF	±1%	CL05C561FB51PN#
121	0.55	50	C0G	560pF	±5%	CL05C561JB51PN#
122	0.55	50	C0G	680pF	±1%	CL05C681FB51PN#
123	0.55	50	C0G	680pF	±2%	CL05C681GB51PN#
124	0.55	50	C0G	680pF	±5%	CL05C681JB51PN#
125	0.55	50	C0G	820pF	±1%	CL05C821FB51PN#
126	0.55	50	C0G	820pF	±5%	CL05C821JB51PN#
127	0.55	50	C0G	1nF	±1%	CL05C102FB51PN#
128	0.55	50	C0G	1nF	±5%	CL05C102JB51PN#
129	0.55	100	C0G	1pF	±0.25pF	CL05C010CC51PN#
130	0.55	100	C0G	1.2pF	±0.25pF	CL05C1R2CC51PN#

General Capacitors

Size Code (inch/mm) : 0402/1005

No.	Thickness Max. (mm)	Rated Voltage (Vdc)	TCC	Capacitance	Capacitance Tolerance	Part Number
131	0.55	100	C0G	1.5pF	±0.25pF	CL05C1R5CC51PN#
132	0.55	100	C0G	1.8pF	±0.25pF	CL05C1R8CC51PN#
133	0.55	100	C0G	2.2pF	±0.25pF	CL05C2R2CC51PN#
134	0.55	100	C0G	2.7pF	±0.25pF	CL05C2R7CC51PN#
135	0.55	100	C0G	3.3pF	±0.25pF	CL05C3R3CC51PN#
136	0.55	100	C0G	3.5pF	±0.25pF	CL05C3R5CC51PN#
137	0.55	100	C0G	3.9pF	±0.25pF	CL05C3R9CC51PN#
138	0.55	100	C0G	4pF	±0.25pF	CL05C040CC51PN#
139	0.55	100	C0G	4.7pF	±0.1pF	CL05C4R7BC51PN#
140	0.55	100	C0G	4.7pF	±0.25pF	CL05C4R7CC51PN#
141	0.55	100	C0G	5.6pF	±0.25pF	CL05C5R6CC51PN#
142	0.55	100	C0G	6pF	±0.1pF	CL05C060BC51PN#
143	0.55	100	C0G	6pF	±0.25pF	CL05C060CC51PN#
144	0.55	100	C0G	6.8pF	±0.25pF	CL05C6R8CC51PN#
145	0.55	100	C0G	6.8pF	±0.5pF	CL05C6R8DC51PN#
146	0.55	100	C0G	7pF	±0.25pF	CL05C070CC51PN#
147	0.55	100	C0G	8.2pF	±0.25pF	CL05C8R2CC51PN#
148	0.55	100	C0G	8.2pF	±0.5pF	CL05C8R2DC51PN#
149	0.55	100	C0G	9pF	±0.25pF	CL05C090CC51PN#
150	0.55	100	C0G	10pF	±5%	CL05C100JC51PN#
151	0.55	100	C0G	12pF	±5%	CL05C120JC51PN#
152	0.55	100	C0G	15pF	±5%	CL05C150JC51PN#
153	0.55	100	C0G	18pF	±5%	CL05C180JC51PN#
154	0.55	100	C0G	22pF	±5%	CL05C220JC51PN#
155	0.55	100	C0G	27pF	±5%	CL05C270JC51PN#
156	0.55	100	C0G	33pF	±5%	CL05C330JC51PN#
157	0.55	100	C0G	39pF	±5%	CL05C390JC51PN#
158	0.55	100	C0G	47pF	±5%	CL05C470JC51PN#
159	0.55	100	C0G	56pF	±5%	CL05C560JC51PN#
160	0.55	100	C0G	68pF	±5%	CL05C680JC51PN#
161	0.55	100	C0G	82pF	±1%	CL05C820FC51PN#
162	0.55	100	C0G	82pF	±5%	CL05C820JC51PN#
163	0.55	100	C0G	100pF	±5%	CL05C101JC51PN#
164	0.55	100	C0G	220pF	±5%	CL05C221JC51PN#
165	0.55	100	C0G	270pF	±5%	CL05C271JC51PN#
166	0.55	100	C0G	470pF	±5%	CL05C471JC51PN#
167	0.55	100	C0G	1nF	±5%	CL05C102JC51PN#

General Capacitors

Size Code (inch/mm) : 0603/1608

No.	Thickness Max. (mm)	Rated Voltage (Vdc)	TCC	Capacitance	Capacitance Tolerance	Part Number
1	0.90	50	C0G	1pF	±0.25pF	CL10C010CB81PN#
2	0.90	50	C0G	1.2pF	±0.25pF	CL10C1R2CB81PN#
3	0.90	50	C0G	1.5pF	±0.25pF	CL10C1R5CB81PN#
4	0.90	50	C0G	1.8pF	±0.25pF	CL10C1R8CB81PN#
5	0.90	50	C0G	2pF	±0.1pF	CL10C020BB81PN#
6	0.90	50	C0G	2pF	±0.25pF	CL10C020CB81PN#
7	0.90	50	C0G	2.2pF	±0.25pF	CL10C2R2CB81PN#
8	0.90	50	C0G	2.7pF	±0.25pF	CL10C2R7CB81PN#
9	0.90	50	C0G	3pF	±0.25pF	CL10C030CB81PN#
10	0.90	50	C0G	3.3pF	±0.25pF	CL10C3R3CB81PN#
11	0.90	50	C0G	3.9pF	±0.25pF	CL10C3R9CB81PN#
12	0.90	50	C0G	3.9pF	±0.5pF	CL10C3R9DB81PN#
13	0.90	50	C0G	4pF	±0.1pF	CL10C040BB81PN#
14	0.90	50	C0G	4pF	±0.25pF	CL10C040CB81PN#
15	0.90	50	C0G	4.7pF	±0.25pF	CL10C4R7CB81PN#
16	0.90	50	C0G	5pF	±0.1pF	CL10C050BB81PN#
17	0.90	50	C0G	5pF	±0.25pF	CL10C050CB81PN#
18	0.90	50	C0G	5.1pF	±0.5pF	CL10C5R1DB81PN#
19	0.90	50	C0G	5.6pF	±0.25pF	CL10C5R6CB81PN#
20	0.90	50	C0G	5.6pF	±0.5pF	CL10C5R6DB81PN#
21	0.90	50	C0G	6pF	±0.25pF	CL10C060CB81PN#
22	0.90	50	C0G	6pF	±0.5pF	CL10C060DB81PN#
23	0.90	50	C0G	6.8pF	±0.25pF	CL10C6R8CB81PN#
24	0.90	50	C0G	6.8pF	±0.5pF	CL10C6R8DB81PN#
25	0.90	50	C0G	7pF	±0.1pF	CL10C070BB81PN#
26	0.90	50	C0G	7pF	±0.25pF	CL10C070CB81PN#
27	0.90	50	C0G	7pF	±0.5pF	CL10C070DB81PN#
28	0.90	50	C0G	7.5pF	±0.1pF	CL10C7R5BB81PN#
29	0.90	50	C0G	7.5pF	±0.25pF	CL10C7R5CB81PN#
30	0.90	50	C0G	7.5pF	±0.5pF	CL10C7R5DB81PN#
31	0.90	50	C0G	8pF	±0.25pF	CL10C080CB81PN#
32	0.90	50	C0G	8pF	±0.5pF	CL10C080DB81PN#
33	0.90	50	C0G	8.2pF	±0.1pF	CL10C8R2BB81PN#
34	0.90	50	C0G	8.2pF	±0.25pF	CL10C8R2CB81PN#
35	0.90	50	C0G	8.5pF	±0.5pF	CL10C8R5DB81PN#
36	0.90	50	C0G	9pF	±0.1pF	CL10C090BB81PN#
37	0.90	50	C0G	9pF	±0.25pF	CL10C090CB81PN#
38	0.90	50	C0G	9pF	±0.5pF	CL10C090DB81PN#
39	0.90	50	C0G	9.4pF	±0.25pF	CL10C9R4CB81PN#
40	0.90	50	C0G	10pF	±0.25pF	CL10C100CB81PN#
41	0.90	50	C0G	10pF	±0.5pF	CL10C100DB81PN#
42	0.90	50	C0G	10pF	±5%	CL10C100JB81PN#
43	0.90	50	C0G	12pF	±5%	CL10C120JB81PN#
44	0.90	50	C0G	15pF	±1%	CL10C150FB81PN#
45	0.90	50	C0G	15pF	±5%	CL10C150JB81PN#

General Capacitors

Size Code (inch/mm) : 0603/1608

No.	Thickness Max. (mm)	Rated Voltage (Vdc)	TCC	Capacitance	Capacitance Tolerance	Part Number
46	0.90	50	C0G	18pF	±5%	CL10C180JB81PN#
47	0.90	50	C0G	20pF	±5%	CL10C200JB81PN#
48	0.90	50	C0G	22pF	±5%	CL10C220JB81PN#
49	0.90	50	C0G	27pF	±5%	CL10C270JB81PN#
50	0.90	50	C0G	33pF	±5%	CL10C330JB81PN#
51	0.90	50	C0G	39pF	±1%	CL10C390FB81PN#
52	0.90	50	C0G	39pF	±2%	CL10C390GB81PN#
53	0.90	50	C0G	39pF	±5%	CL10C390JB81PN#
54	0.90	50	C0G	47pF	±1%	CL10C470FB81PN#
55	0.90	50	C0G	47pF	±5%	CL10C470JB81PN#
56	0.90	50	C0G	56pF	±5%	CL10C560JB81PN#
57	0.90	50	C0G	62pF	±5%	CL10C620JB81PN#
58	0.90	50	C0G	68pF	±5%	CL10C680JB81PN#
59	0.90	50	C0G	75pF	±5%	CL10C750JB81PN#
60	0.90	50	C0G	82pF	±5%	CL10C820JB81PN#
61	0.90	50	C0G	100pF	±1%	CL10C101FB81PN#
62	0.90	50	C0G	100pF	±5%	CL10C101JB81PN#
63	0.90	50	C0G	120pF	±5%	CL10C121JB81PN#
64	0.90	50	C0G	130pF	±5%	CL10C131JB81PN#
65	0.90	50	C0G	150pF	±5%	CL10C151JB81PN#
66	0.90	50	C0G	180pF	±5%	CL10C181JB81PN#
67	0.90	50	C0G	220pF	±5%	CL10C221JB81PN#
68	0.90	50	C0G	270pF	±5%	CL10C271JB81PN#
69	0.90	50	C0G	330pF	±5%	CL10C331JB81PN#
70	0.90	50	C0G	390pF	±5%	CL10C391JB81PN#
71	0.90	50	C0G	470pF	±1%	CL10C471FB81PN#
72	0.90	50	C0G	470pF	±5%	CL10C471JB81PN#
73	0.90	50	C0G	510pF	±1%	CL10C511FB81PN#
74	0.90	50	C0G	510pF	±2%	CL10C511GB81PN#
75	0.90	50	C0G	510pF	±5%	CL10C511JB81PN#
76	0.90	50	C0G	560pF	±5%	CL10C561JB81PN#
77	0.90	50	C0G	680pF	±1%	CL10C681FB81PN#
78	0.90	50	C0G	680pF	±5%	CL10C681JB81PN#
79	0.90	50	C0G	750pF	±5%	CL10C751JB81PN#
80	0.90	50	C0G	820pF	±1%	CL10C821FB81PN#
81	0.90	50	C0G	820pF	±5%	CL10C821JB81PN#
82	0.90	50	C0G	1nF	±1%	CL10C102FB81PN#
83	0.90	50	C0G	1nF	±2%	CL10C102GB81PN#
84	0.90	50	C0G	1nF	±5%	CL10C102JB81PN#
85	0.90	100	C0G	1pF	±0.25pF	CL10C010CC81PN#
86	0.90	100	C0G	1.2pF	±0.25pF	CL10C1R2CC81PN#
87	0.90	100	C0G	1.5pF	±0.25pF	CL10C1R5CC81PN#
88	0.90	100	C0G	1.8pF	±0.25pF	CL10C1R8CC81PN#
89	0.90	100	C0G	2pF	±0.25pF	CL10C020CC81PN#
90	0.90	100	C0G	2.2pF	±0.25pF	CL10C2R2CC81PN#

General Capacitors

Size Code (inch/mm) : 0603/1608

No.	Thickness Max. (mm)	Rated Voltage (Vdc)	TCC	Capacitance	Capacitance Tolerance	Part Number
91	0.90	100	C0G	2.7pF	±0.25pF	CL10C2R7CC81PN#
92	0.90	100	C0G	3pF	±0.25pF	CL10C030CC81PN#
93	0.90	100	C0G	3.3pF	±0.25pF	CL10C3R3CC81PN#
94	0.90	100	C0G	3.9pF	±0.25pF	CL10C3R9CC81PN#
95	0.90	100	C0G	3.9pF	±0.5pF	CL10C3R9DC81PN#
96	0.90	100	C0G	4pF	±0.25pF	CL10C040CC81PN#
97	0.90	100	C0G	4.7pF	±0.25pF	CL10C4R7CC81PN#
98	0.90	100	C0G	5pF	±0.25pF	CL10C050CC81PN#
99	0.90	100	C0G	5.6pF	±0.25pF	CL10C5R6CC81PN#
100	0.90	100	C0G	6.8pF	±0.5pF	CL10C6R8DC81PN#
101	0.90	100	C0G	7pF	±0.25pF	CL10C070CC81PN#
102	0.90	100	C0G	8pF	±0.25pF	CL10C080CC81PN#
103	0.90	100	C0G	8pF	±0.5pF	CL10C080DC81PN#
104	0.90	100	C0G	8.2pF	±0.5pF	CL10C8R2DC81PN#
105	0.90	100	C0G	9pF	±0.1pF	CL10C090BC81PN#
106	0.90	100	C0G	9pF	±0.25pF	CL10C090CC81PN#
107	0.90	100	C0G	10pF	±5%	CL10C100JC81PN#
108	0.90	100	C0G	12pF	±5%	CL10C120JC81PN#
109	0.90	100	C0G	15pF	±5%	CL10C150JC81PN#
110	0.90	100	C0G	18pF	±5%	CL10C180JC81PN#
111	0.90	100	C0G	20pF	±5%	CL10C200JC81PN#
112	0.90	100	C0G	22pF	±5%	CL10C220JC81PN#
113	0.90	100	C0G	27pF	±5%	CL10C270JC81PN#
114	0.90	100	C0G	33pF	±5%	CL10C330JC81PN#
115	0.90	100	C0G	39pF	±5%	CL10C390JC81PN#
116	0.90	100	C0G	47pF	±5%	CL10C470JC81PN#
117	0.90	100	C0G	50pF	±5%	CL10C500JC81PN#
118	0.90	100	C0G	56pF	±5%	CL10C560JC81PN#
119	0.90	100	C0G	68pF	±5%	CL10C680JC81PN#
120	0.90	100	C0G	82pF	±5%	CL10C820JC81PN#
121	0.90	100	C0G	100pF	±5%	CL10C101JC81PN#
122	0.90	100	C0G	120pF	±5%	CL10C121JC81PN#
123	0.90	100	C0G	150pF	±5%	CL10C151JC81PN#
124	0.90	100	C0G	180pF	±5%	CL10C181JC81PN#
125	0.90	100	C0G	220pF	±5%	CL10C221JC81PN#
126	0.90	100	C0G	1nF	±5%	CL10C102JC81PN#

General Capacitors

Size Code (inch/mm) : 0805/2012

No.	Thickness Max. (mm)	Rated Voltage (Vdc)	TCC	Capacitance	Capacitance Tolerance	Part Number
1	0.70	50	C0G	10pF	±5%	CL21C100JB61PN#
2	0.70	50	C0G	12pF	±5%	CL21C120JB61PN#
3	0.70	50	C0G	15pF	±1%	CL21C150FB61PN#
4	0.70	50	C0G	15pF	±2%	CL21C150GB61PN#
5	0.70	50	C0G	15pF	±5%	CL21C150JB61PN#
6	0.70	50	C0G	22pF	±5%	CL21C220JB61PN#
7	0.70	50	C0G	24pF	±1%	CL21C240FB61PN#
8	0.70	50	C0G	24pF	±2%	CL21C240GB61PN#
9	0.70	50	C0G	27pF	±5%	CL21C270JB61PN#
10	0.70	50	C0G	33pF	±1%	CL21C330FB61PN#
11	0.70	50	C0G	33pF	±2%	CL21C330GB61PN#
12	0.70	50	C0G	33pF	±5%	CL21C330JB61PN#
13	0.70	50	C0G	39pF	±5%	CL21C390JB61PN#
14	0.70	50	C0G	47pF	±5%	CL21C470JB61PN#
15	0.70	50	C0G	56pF	±5%	CL21C560JB61PN#
16	0.70	50	C0G	68pF	±5%	CL21C680JB61PN#
17	0.70	50	C0G	82pF	±1%	CL21C820FB61PN#
18	0.70	50	C0G	82pF	±2%	CL21C820GB61PN#
19	0.70	50	C0G	82pF	±5%	CL21C820JB61PN#
20	0.70	50	C0G	100pF	±5%	CL21C101JB61PN#
21	0.70	50	C0G	120pF	±5%	CL21C121JB61PN#
22	0.70	50	C0G	150pF	±5%	CL21C151JB61PN#
23	0.95	50	C0G	150pF	±5%	CL21C151JBC1PN#
24	0.70	50	C0G	220pF	±2%	CL21C221GB61PN#
25	0.70	50	C0G	220pF	±5%	CL21C221JB61PN#
26	0.70	50	C0G	270pF	±5%	CL21C271JB61PN#
27	0.70	50	C0G	330pF	±5%	CL21C331JB61PN#
28	0.95	50	C0G	470pF	±5%	CL21C471JBC1PN#
29	0.95	50	C0G	560pF	±5%	CL21C561JBC1PN#
30	0.95	50	C0G	680pF	±5%	CL21C681JBC1PN#
31	0.95	50	C0G	820pF	±5%	CL21C821JBC1PN#
32	0.95	50	C0G	1nF	±5%	CL21C102JBC1PN#
33	0.95	50	C0G	1.2nF	±5%	CL21C122JBC1PN#
34	0.95	50	C0G	1.5nF	±5%	CL21C152JBC1PN#
35	1.35	50	C0G	1.8nF	±1%	CL21C182FBF1PN#
36	1.35	50	C0G	1.8nF	±2%	CL21C182GBF1PN#
37	1.35	50	C0G	1.8nF	±5%	CL21C182JBF1PN#
38	0.95	50	C0G	2.2nF	±5%	CL21C222JBC1PN#
39	0.95	50	C0G	3.9nF	±5%	CL21C392JBC1PN#
40	0.95	50	C0G	4.7nF	±5%	CL21C472JBC1PN#

General Capacitors

Size Code (inch/mm) : 0805/2012

No.	Thickness Max. (mm)	Rated Voltage (Vdc)	TCC	Capacitance	Capacitance Tolerance	Part Number
41	0.95	50	C0G	5.6nF	±5%	CL21C562JBC1PN#
42	1.35	50	C0G	6.8nF	±5%	CL21C682JBF1PN#
43	1.35	50	C0G	8.2nF	±5%	CL21C822JBF1PN#
44	1.35	50	C0G	10nF	±5%	CL21C103JBF1PN#
45	0.70	100	C0G	12pF	±5%	CL21C120JC61PN#
46	0.70	100	C0G	15pF	±5%	CL21C150JC61PN#
47	0.70	100	C0G	20pF	±5%	CL21C200JC61PN#
48	0.70	100	C0G	22pF	±5%	CL21C220JC61PN#
49	0.70	100	C0G	24pF	±5%	CL21C240JC61PN#
50	0.70	100	C0G	27pF	±5%	CL21C270JC61PN#
51	0.70	100	C0G	33pF	±5%	CL21C330JC61PN#
52	0.70	100	C0G	39pF	±5%	CL21C390JC61PN#
53	0.70	100	C0G	47pF	±5%	CL21C470JC61PN#
54	0.70	100	C0G	56pF	±5%	CL21C560JC61PN#
55	0.70	100	C0G	68pF	±5%	CL21C680JC61PN#
56	0.70	100	C0G	82pF	±5%	CL21C820JC61PN#
57	0.70	100	C0G	100pF	±5%	CL21C101JC61PN#
58	0.70	100	C0G	150pF	±5%	CL21C151JC61PN#
59	0.95	100	C0G	150pF	±5%	CL21C151JCC1PN#
60	0.70	100	C0G	220pF	±5%	CL21C221JC61PN#
61	0.70	100	C0G	270pF	±5%	CL21C271JC61PN#
62	0.70	100	C0G	330pF	±5%	CL21C331JC61PN#
63	0.95	100	C0G	470pF	±5%	CL21C471JCC1PN#
64	0.95	100	C0G	680pF	±5%	CL21C681JCC1PN#
65	0.95	100	C0G	820pF	±5%	CL21C821JCC1PN#
66	0.95	100	C0G	1nF	±5%	CL21C102JCC1PN#
67	0.95	100	C0G	1.5nF	±5%	CL21C152JCC1PN#
68	1.45	100	C0G	3.3nF	±5%	CL21C332JCY1PN#
69	1.45	100	C0G	4.7nF	±5%	CL21C472JCY1PN#
70	1.45	100	C0G	10nF	±5%	CL21C103JCY1PN#

Size Code (inch/mm) : 1206/3216

No.	Thickness Max. (mm)	Rated Voltage (Vdc)	TCC	Capacitance	Capacitance Tolerance	Part Number
1	1.80	100	C0G	4.7nF	±5%	CL31C472JCH1PN#

General Capacitors

Product LineUp (X7R/X7S/X7T)

Size Code (inch/mm) : 0201/0603

No.	Thickness Max. (mm)	Rated Voltage (Vdc)	TCC	Capacitance	Capacitance Tolerance	Part Number
1	0.39	2.5	X7T	1uF	±20%	CL03Z105MSR6PN#
2	0.35	4	X7S	100nF	±10%	CL03Y104KRSVPN#
3	0.39	4	X7T	1uF	±20%	CL03Z105MRR6PN#
4	0.35	6.3	X7R	1nF	±10%	CL03B102KQSVPN#
5	0.35	6.3	X7R	2.2nF	±10%	CL03B222KQSVPN#
6	0.35	6.3	X7R	3.3nF	±10%	CL03B332KQSVPN#
7	0.35	6.3	X7R	4.7nF	±10%	CL03B472KQSVPN#
8	0.35	6.3	X7R	6.8nF	±10%	CL03B682KQSVPN#
9	0.35	6.3	X7R	10nF	±10%	CL03B103KQSVPN#
10	0.35	6.3	X7S	22nF	±10%	CL03Y223KQSVPN#
11	0.35	6.3	X7S	33nF	±10%	CL03Y333KQSVPN#
12	0.35	6.3	X7S	47nF	±10%	CL03Y473KQSVPN#
13	0.35	6.3	X7S	68nF	±10%	CL03Y683KQSVPN#
14	0.35	6.3	X7S	100nF	±10%	CL03Y104KQSVPN#
15	0.35	10	X7R	1nF	±10%	CL03B102KPSVPN#
16	0.35	10	X7R	1.5nF	±10%	CL03B152KPSVPN#
17	0.35	10	X7R	2.2nF	±10%	CL03B222KPSVPN#
18	0.35	10	X7R	3.3nF	±10%	CL03B332KPSVPN#
19	0.35	10	X7R	4.7nF	±10%	CL03B472KPSVPN#
20	0.35	10	X7R	6.8nF	±10%	CL03B682KPSVPN#
21	0.35	10	X7R	10nF	±10%	CL03B103KPSVPN#
22	0.35	16	X7R	1nF	±10%	CL03B102KOSVPN#
23	0.35	16	X7R	1.5nF	±10%	CL03B152KOSVPN#
24	0.35	16	X7R	2.2nF	±10%	CL03B222KOSVPN#
25	0.35	16	X7R	3.3nF	±10%	CL03B332KOSVPN#
26	0.35	16	X7R	4.7nF	±10%	CL03B472KOSVPN#
27	0.35	16	X7R	10nF	±10%	CL03B103KOSVPN#
28	0.35	16	X7S	100nF	±10%	CL03Y104KOS6PN#
29	0.35	25	X7R	1nF	±10%	CL03B102KASVPN#
30	0.35	25	X7R	1.5nF	±10%	CL03B152KASVPN#
31	0.35	25	X7R	2.2nF	±10%	CL03B222KASVPN#
32	0.35	25	X7R	3.3nF	±10%	CL03B332KASVPN#
33	0.35	25	X7R	4.7nF	±10%	CL03B472KASVPN#
34	0.35	25	X7R	6.8nF	±10%	CL03B682KASVPN#
35	0.35	25	X7R	10nF	±10%	CL03B103KASVPN#

General Capacitors

Size Code (inch/mm) : 0402/1005

No.	Thickness Max. (mm)	Rated Voltage (Vdc)	TCC	Capacitance	Capacitance Tolerance	Part Number
1	0.55	6.3	X7R	100nF	±10%	CL05B104KQ5VPN#
2	0.55	6.3	X7S	220nF	±10%	CL05Y224KQ5VPN#
3	0.55	6.3	X7S	470nF	±10%	CL05Y474KQ5VPN#
4	0.70	6.3	X7S	680nF	±10%	CL05Y684KQ6VPN#
5	0.70	6.3	X7S	1uF	±10%	CL05Y105KQ6VPN#
6	0.55	10	X7R	10nF	±10%	CL05B103KP5VPN#
7	0.55	10	X7R	33nF	±10%	CL05B333KP5VPN#
8	0.55	10	X7R	100nF	±10%	CL05B104KP5VPN#
9	0.55	10	X7R	220nF	±10%	CL05B224KP5VPN#
10	0.55	10	X7S	220nF	±10%	CL05Y224KP5VPN#
11	0.55	10	X7S	330nF	±10%	CL05Y334KP5VPN#
12	0.60	10	X7S	470nF	±10%	CL05Y474KP5VPN#
13	0.70	10	X7S	680nF	±10%	CL05Y684KP6VPN#
14	0.67	10	X7S	1uF	±10%	CL05Y105KPAVPN#
15	0.70	10	X7S	1uF	±10%	CL05Y105KP6VPN#
16	0.55	16	X7R	330pF	±10%	CL05B331KO5VPN#
17	0.55	16	X7R	1nF	±10%	CL05B102KO5VPN#
18	0.55	16	X7R	2.2nF	±10%	CL05B222KO5VPN#
19	0.55	16	X7R	3.3nF	±10%	CL05B332KO5VPN#
20	0.55	16	X7R	4.7nF	±10%	CL05B472KO5VPN#
21	0.55	16	X7R	6.8nF	±10%	CL05B682KO5VPN#
22	0.55	16	X7R	10nF	±10%	CL05B103KO5VPN#
23	0.55	16	X7R	15nF	±10%	CL05B153KO5VPN#
24	0.55	16	X7R	22nF	±10%	CL05B223KO5VPN#
25	0.55	16	X7R	33nF	±10%	CL05B333KO5VPN#
26	0.55	16	X7R	47nF	±10%	CL05B473KO5VPN#
27	0.55	16	X7R	56nF	±10%	CL05B563KO5VPN#
28	0.55	16	X7R	68nF	±10%	CL05B683KO5VPN#
29	0.55	16	X7R	82nF	±10%	CL05B823KO5VPN#
30	0.55	16	X7R	100nF	±10%	CL05B104KO5VPN#
31	0.55	16	X7R	150nF	±10%	CL05B154KO5VPN#
32	0.55	16	X7R	220nF	±10%	CL05B224KO5VPN#
33	0.55	16	X7S	220nF	±10%	CL05Y224KO5VPN#
34	0.55	25	X7R	1nF	±10%	CL05B102KA5VPN#
35	0.55	25	X7R	1.5nF	±10%	CL05B152KA5VPN#
36	0.55	25	X7R	1.8nF	±10%	CL05B182KA5VPN#
37	0.55	25	X7R	2.2nF	±10%	CL05B222KA5VPN#
38	0.55	25	X7R	3.3nF	±10%	CL05B332KA5VPN#
39	0.55	25	X7R	4.7nF	±10%	CL05B472KA5VPN#
40	0.55	25	X7R	5.6nF	±10%	CL05B562KA5VPN#

General Capacitors

Size Code (inch/mm) : 0402/1005

No.	Thickness Max. (mm)	Rated Voltage (Vdc)	TCC	Capacitance	Capacitance Tolerance	Part Number
41	0.55	25	X7R	6.8nF	±10%	CL05B682KA5VPN#
42	0.55	25	X7R	8.2nF	±10%	CL05B822KA5VPN#
43	0.55	25	X7R	10nF	±10%	CL05B103KA5VPN#
44	0.55	25	X7R	15nF	±10%	CL05B153KA5VPN#
45	0.55	25	X7R	22nF	±10%	CL05B223KA5VPN#
46	0.55	25	X7R	27nF	±10%	CL05B273KA5VPN#
47	0.55	25	X7R	33nF	±10%	CL05B333KA5VPN#
48	0.55	25	X7R	47nF	±10%	CL05B473KA5VPN#
49	0.55	25	X7R	68nF	±10%	CL05B683KA54PN#
50	0.55	25	X7R	100nF	±10%	CL05B104KA54PN#
51	0.55	25	X7R	150nF	±10%	CL05B154KA5VPN#
52	0.55	25	X7R	220nF	±10%	CL05B224KA5VPN#
53	0.55	50	X7R	220pF	±10%	CL05B221KB5VPN#
54	0.55	50	X7R	330pF	±10%	CL05B331KB5VPN#
55	0.55	50	X7R	470pF	±10%	CL05B471KB5VPN#
56	0.55	50	X7R	680pF	±10%	CL05B681KB5VPN#
57	0.55	50	X7R	1nF	±5%	CL05B102JB5VPN#
58	0.55	50	X7R	1nF	±10%	CL05B102KB5VPN#
59	0.55	50	X7R	1.2nF	±10%	CL05B122KB5VPN#
60	0.55	50	X7R	1.5nF	±10%	CL05B152KB5VPN#
61	0.55	50	X7R	1.8nF	±10%	CL05B182KB5VPN#
62	0.55	50	X7R	2.2nF	±10%	CL05B222KB5VPN#
63	0.55	50	X7R	2.7nF	±10%	CL05B272KB5VPN#
64	0.55	50	X7R	3.3nF	±5%	CL05B332JB5VPN#
65	0.55	50	X7R	3.3nF	±10%	CL05B332KB5VPN#
66	0.55	50	X7R	3.9nF	±5%	CL05B392JB5VPN#
67	0.55	50	X7R	3.9nF	±10%	CL05B392KB5VPN#
68	0.55	50	X7R	4.7nF	±5%	CL05B472JB5VPN#
69	0.55	50	X7R	4.7nF	±10%	CL05B472KB5VPN#
70	0.55	50	X7R	5.6nF	±5%	CL05B562JB5VPN#
71	0.55	50	X7R	5.6nF	±10%	CL05B562KB5VPN#
72	0.55	50	X7R	6.8nF	±10%	CL05B682KB5VPN#
73	0.55	50	X7R	8.2nF	±10%	CL05B822KB5VPN#
74	0.55	50	X7R	10nF	±5%	CL05B103JB5VPN#
75	0.55	50	X7R	10nF	±10%	CL05B103KB5VPN#
76	0.55	50	X7R	15nF	±10%	CL05B153KB5VPN#
77	0.55	50	X7R	22nF	±10%	CL05B223KB5VPN#
78	0.55	50	X7R	27nF	±10%	CL05B273KB5VPN#
79	0.55	50	X7R	33nF	±10%	CL05B333KB5VPN#
80	0.55	50	X7R	47nF	±10%	CL05B473KB5VPN#

General Capacitors

Size Code (inch/mm) : 0402/1005

No.	Thickness Max. (mm)	Rated Voltage (Vdc)	TCC	Capacitance	Capacitance Tolerance	Part Number
81	0.55	50	X7R	68nF	±10%	CL05B683KB54PN#
82	0.55	50	X7R	100nF	±10%	CL05B104KB54PN#
83	0.55	100	X7R	220pF	±10%	CL05B221KC5VPN#
84	0.55	100	X7R	330pF	±10%	CL05B331KC5VPN#
85	0.55	100	X7R	470pF	±10%	CL05B471KC5VPN#
86	0.55	100	X7R	680pF	±10%	CL05B681KC5VPN#
87	0.55	100	X7R	1nF	±10%	CL05B102KC5VPN#
88	0.55	100	X7R	1.5nF	±10%	CL05B152KC5VPN#
89	0.55	100	X7R	1.8nF	±10%	CL05B182KC5VPN#
90	0.55	100	X7R	2.2nF	±10%	CL05B222KC5VPN#
91	0.55	100	X7R	2.7nF	±10%	CL05B272KC5VPN#
92	0.55	100	X7R	3.3nF	±10%	CL05B332KC5VPN#
93	0.55	100	X7R	4.7nF	±10%	CL05B472KC5VPN#
94	0.55	100	X7R	6.8nF	±10%	CL05B682KC5VPN#
95	0.55	100	X7R	10nF	±10%	CL05B103KC5VPN#

Size Code (inch/mm) : 0603/1608

No.	Thickness Max. (mm)	Rated Voltage (Vdc)	TCC	Capacitance	Capacitance Tolerance	Part Number
1	1.00	2.5	X7T	22uF	±20%	CL10Z226MS96PN#
2	1.00	4	X7T	10uF	±20%	CL10Z106MR9VPN#
3	1.00	4	X7T	22uF	±20%	CL10Z226MR96PN#
4	0.90	6.3	X7R	1uF	±10%	CL10B105KQ8VPN#
5	0.90	6.3	X7S	2.2uF	±10%	CL10Y225KQ8VPN#
6	1.00	6.3	X7S	4.7uF	±10%	CL10Y475KQ96PN#
7	1.00	6.3	X7T	4.7uF	±20%	CL10Z475MQ9VPN#
8	1.00	6.3	X7T	10uF	±20%	CL10Z106MQ9VPN#
9	0.90	10	X7R	220nF	±10%	CL10B224KP8VPN#
10	0.90	10	X7R	470nF	±10%	CL10B474KP8VPN#
11	0.90	10	X7R	1uF	±10%	CL10B105KP8VPN#
12	0.90	10	X7S	1.5uF	±10%	CL10Y155KP84PN#
13	0.90	10	X7S	2.2uF	±10%	CL10Y225KP84PN#
14	1.00	10	X7S	4.7uF	±10%	CL10Y475KP96PN#
15	0.90	16	X7R	1.2nF	±5%	CL10B122JO8WPN#
16	0.90	16	X7R	10nF	±10%	CL10B103KO8WPN#
17	0.90	16	X7R	15nF	±10%	CL10B153KO8WPN#
18	0.90	16	X7R	22nF	±10%	CL10B223KO8WPN#
19	0.90	16	X7R	27nF	±10%	CL10B273KO8WPN#
20	0.90	16	X7R	33nF	±10%	CL10B333KO8WPN#
21	0.90	16	X7R	47nF	±10%	CL10B473KO8WPN#
22	0.90	16	X7R	68nF	±10%	CL10B683KO8WPN#
23	0.90	16	X7R	100nF	±10%	CL10B104KO8WPN#
24	0.90	16	X7R	150nF	±10%	CL10B154KO8VPN#
25	0.90	16	X7R	220nF	±10%	CL10B224KO8VPN#

General Capacitors

Size Code (inch/mm) : 0603/1608

No.	Thickness Max. (mm)	Rated Voltage (Vdc)	TCC	Capacitance	Capacitance Tolerance	Part Number
26	0.90	16	X7R	270nF	±10%	CL10B274KO8VPN#
27	0.90	16	X7R	330nF	±10%	CL10B334KO8VPN#
28	0.90	16	X7R	470nF	±10%	CL10B474KO8VPN#
29	0.90	16	X7R	680nF	±10%	CL10B684KO8VPN#
30	0.90	16	X7R	1uF	±10%	CL10B105KO8VPN#
31	0.90	16	X7S	1uF	±10%	CL10Y105KO8VPN#
32	1.00	16	X7S	2.2uF	±10%	CL10Y225KO96PN#
33	0.90	25	X7R	1nF	±10%	CL10B102KA8WPN#
34	0.90	25	X7R	1.5nF	±10%	CL10B152KA8WPN#
35	0.90	25	X7R	2.2nF	±10%	CL10B222KA8WPN#
36	0.90	25	X7R	3.3nF	±10%	CL10B332KA8WPN#
37	0.90	25	X7R	4.7nF	±10%	CL10B472KA8WPN#
38	0.90	25	X7R	6.8nF	±10%	CL10B682KA8WPN#
39	0.90	25	X7R	10nF	±10%	CL10B103KA8WPN#
40	0.90	25	X7R	15nF	±10%	CL10B153KA8WPN#
41	0.90	25	X7R	22nF	±10%	CL10B223KA8WPN#
42	0.90	25	X7R	33nF	±10%	CL10B333KA8WPN#
43	0.90	25	X7R	47nF	±10%	CL10B473KA8WPN#
44	0.90	25	X7R	68nF	±10%	CL10B683KA8WPN#
45	0.90	25	X7R	100nF	±10%	CL10B104KA8WPN#
46	0.90	25	X7R	100nF	±20%	CL10B104MA8WPN#
47	0.90	25	X7R	150nF	±10%	CL10B154KA8VPN#
48	0.90	25	X7R	220nF	±10%	CL10B224KA8VPN#
49	0.90	25	X7R	330nF	±10%	CL10B334KA8VPN#
50	0.90	25	X7R	470nF	±10%	CL10B474KA8VPN#
51	0.90	25	X7R	680nF	±10%	CL10B684KA8VPN#
52	0.90	25	X7R	1uF	±5%	CL10B105JA8VPN#
53	0.90	25	X7R	1uF	±10%	CL10B105KA8VPN#
54	1.00	25	X7S	2.2uF	±10%	CL10Y225KA96PN#
55	0.90	35	X7R	470nF	±10%	CL10B474KL8VPN#
56	1.00	35	X7R	1uF	±10%	CL10B105KL9VPN#
57	0.90	50	X7R	220pF	±10%	CL10B221KB8WPN#
58	0.90	50	X7R	330pF	±10%	CL10B331KB8WPN#
59	0.90	50	X7R	470pF	±10%	CL10B471KB8WPN#
60	0.90	50	X7R	680pF	±10%	CL10B681KB8WPN#
61	0.90	50	X7R	1nF	±10%	CL10B102KB8WPN#
62	0.90	50	X7R	1.2nF	±10%	CL10B122KB8WPN#
63	0.90	50	X7R	1.5nF	±10%	CL10B152KB8WPN#
64	0.90	50	X7R	1.8nF	±10%	CL10B182KB8WPN#
65	0.90	50	X7R	2.2nF	±10%	CL10B222KB8WPN#
66	0.90	50	X7R	3.3nF	±10%	CL10B332KB8WPN#
67	0.90	50	X7R	3.9nF	±10%	CL10B392KB8WPN#
68	0.90	50	X7R	4.7nF	±5%	CL10B472JB8WPN#
69	0.90	50	X7R	4.7nF	±10%	CL10B472KB8WPN#
70	0.90	50	X7R	6.8nF	±10%	CL10B682KB8WPN#

General Capacitors

Size Code (inch/mm) : 0603/1608

No.	Thickness Max. (mm)	Rated Voltage (Vdc)	TCC	Capacitance	Capacitance Tolerance	Part Number
71	0.90	50	X7R	8.2nF	±10%	CL10B822KB8WPN#
72	0.90	50	X7R	10nF	±5%	CL10B103JB8WPN#
73	0.90	50	X7R	10nF	±10%	CL10B103KB8WPN#
74	0.90	50	X7R	15nF	±10%	CL10B153KB8WPN#
75	0.90	50	X7R	22nF	±10%	CL10B223KB8WPN#
76	0.90	50	X7R	27nF	±10%	CL10B273KB8WPN#
77	0.90	50	X7R	33nF	±10%	CL10B333KB8WPN#
78	0.90	50	X7R	47nF	±10%	CL10B473KB8WPN#
79	0.90	50	X7R	68nF	±10%	CL10B683KB8WPN#
80	0.90	50	X7R	100nF	±10%	CL10B104KB8VPN#
81	0.90	50	X7R	100nF	±10%	CL10B104KB8WPN#
82	0.90	50	X7R	150nF	±10%	CL10B154KB8VPN#
83	0.90	50	X7R	220nF	±10%	CL10B224KB8VPN#
84	0.90	50	X7R	330nF	±10%	CL10B334KB8VPN#
85	0.90	50	X7R	470nF	±10%	CL10B474KB8VPN#
86	1.00	50	X7R	1uF	±10%	CL10B105KB9VPN#
87	0.90	100	X7R	220pF	±10%	CL10B221KC8WPN#
88	0.90	100	X7R	270pF	±10%	CL10B271KC8WPN#
89	0.90	100	X7R	330pF	±10%	CL10B331KC8WPN#
90	0.90	100	X7R	390pF	±10%	CL10B391KC8WPN#
91	0.90	100	X7R	470pF	±10%	CL10B471KC8WPN#
92	0.90	100	X7R	560pF	±10%	CL10B561KC8WPN#
93	0.90	100	X7R	1nF	±10%	CL10B102KC8WPN#
94	0.90	100	X7R	1.5nF	±10%	CL10B152KC8WPN#
95	0.90	100	X7R	2.2nF	±10%	CL10B222KC8WPN#
96	0.90	100	X7R	3.3nF	±10%	CL10B332KC8WPN#
97	0.90	100	X7R	4.7nF	±10%	CL10B472KC8WPN#
98	0.90	100	X7R	6.8nF	±10%	CL10B682KC8WPN#
99	0.90	100	X7R	10nF	±5%	CL10B103JC8WPN#
100	0.90	100	X7R	10nF	±10%	CL10B103KC8WPN#
101	0.90	100	X7R	15nF	±10%	CL10B153KC8WPN#
102	0.90	100	X7R	22nF	±10%	CL10B223KC8WPN#
103	0.90	100	X7R	33nF	±10%	CL10B333KC8WPN#
104	0.90	100	X7R	47nF	±10%	CL10B473KC8WPN#
105	0.90	100	X7R	68nF	±10%	CL10B683KC8WPN#
106	0.90	100	X7R	100nF	±10%	CL10B104KC8VPN#

General Capacitors

Size Code (inch/mm) : 0805/2012

No.	Thickness Max. (mm)	Rated Voltage (Vdc)	TCC	Capacitance	Capacitance Tolerance	Part Number
1	1.45	4	X7T	22uF	±20%	CL21Z226MRYVPN#
2	1.40	6.3	X7R	4.7uF	±10%	CL21B475KQQVPN#
3	1.40	6.3	X7S	6.8uF	±10%	CL21Y685KQQVPN#
4	1.40	6.3	X7S	10uF	±10%	CL21Y106KQQVPN#
5	1.45	6.3	X7R	10uF	±10%	CL21B106KQY6PN#
6	1.45	6.3	X7T	22uF	±20%	CL21Z226MQYVPN#
7	1.35	10	X7R	1uF	±10%	CL21B105KPFVPN#
8	1.35	10	X7R	2.2uF	±10%	CL21B225KPFVPN#
9	1.40	10	X7R	3.3uF	±10%	CL21B335KPQVPN#
10	1.40	10	X7R	4.7uF	±10%	CL21B475KPQVPN#
11	1.50	10	X7S	4.7uF	±10%	CL21Y475KPBVPN#
12	1.40	10	X7S	6.8uF	±10%	CL21Y685KPQVPN#
13	1.40	10	X7S	10uF	±10%	CL21Y106KPQVPN#
14	1.45	10	X7R	10uF	±10%	CL21B106KPY6PN#
15	1.35	16	X7R	220nF	±10%	CL21B224KOFVPN#
16	1.35	16	X7R	470nF	±10%	CL21B474KOFVPN#
17	1.35	16	X7R	680nF	±10%	CL21B684KOFVPN#
18	1.35	16	X7R	1uF	±10%	CL21B105KOFVPN#
19	1.35	16	X7R	1.5uF	±10%	CL21B155KOFVPN#
20	1.35	16	X7R	2.2uF	±10%	CL21B225KOFVPN#
21	1.40	16	X7R	3.3uF	±10%	CL21B335KOQVPN#
22	1.40	16	X7R	4.7uF	±10%	CL21B475KOQVPN#
23	1.40	16	X7S	10uF	±10%	CL21Y106KOQ4PN#
24	1.50	16	X7S	10uF	±10%	CL21Y106KOBVPN#
25	0.95	25	X7R	100nF	±10%	CL21B104KACWPN#
26	1.35	25	X7R	220nF	±10%	CL21B224KAFVPN#
27	1.35	25	X7R	470nF	±10%	CL21B474KAFVPN#
28	1.35	25	X7R	680nF	±10%	CL21B684KAFVPN#
29	1.35	25	X7R	1uF	±10%	CL21B105KAFVPN#
30	1.35	25	X7R	1.5uF	±10%	CL21B155KAFVPN#
31	1.35	25	X7R	2.2uF	±10%	CL21B225KAFVPN#
32	1.45	25	X7S	2.2uF	±10%	CL21Y225KAYVPN#
33	1.50	25	X7R	3.3uF	±10%	CL21B335KAB6PN#
34	1.50	25	X7S	3.3uF	±10%	CL21Y335KABVPN#
35	1.50	25	X7R	4.7uF	±10%	CL21B475KAB6PN#
36	1.50	25	X7S	4.7uF	±10%	CL21Y475KABVPN#
37	1.50	25	X7S	6.8uF	±10%	CL21Y685KABVPN#
38	1.50	25	X7S	10uF	±10%	CL21Y106KABVPN#
39	1.35	35	X7R	1uF	±10%	CL21B105KLFVPN#
40	1.45	35	X7R	1.5uF	±10%	CL21B155KLYVPN#
41	1.45	35	X7R	2.2uF	±10%	CL21B225KLYVPN#
42	1.50	35	X7R	3.3uF	±10%	CL21B335KLB6PN#
43	1.50	35	X7S	3.3uF	±10%	CL21Y335KLBVPN#
44	1.50	35	X7R	4.7uF	±10%	CL21B475KLB6PN#
45	1.50	35	X7S	4.7uF	±10%	CL21Y475KLBVPN#

General Capacitors

Size Code (inch/mm) : 0805/2012

No.	Thickness Max. (mm)	Rated Voltage (Vdc)	TCC	Capacitance	Capacitance Tolerance	Part Number
46	0.70	50	X7R	470pF	±10%	CL21B471KB6WPN#
47	0.70	50	X7R	1nF	±5%	CL21B102JB6WPN#
48	0.70	50	X7R	1nF	±10%	CL21B102KB6WPN#
49	0.70	50	X7R	1.5nF	±10%	CL21B152KB6WPN#
50	0.70	50	X7R	2.2nF	±10%	CL21B222KB6WPN#
51	0.70	50	X7R	3.3nF	±10%	CL21B332KB6WPN#
52	0.70	50	X7R	4.7nF	±10%	CL21B472KB6WPN#
53	0.70	50	X7R	6.8nF	±10%	CL21B682KB6WPN#
54	0.70	50	X7R	10nF	±10%	CL21B103KB6WPN#
55	0.70	50	X7R	22nF	±10%	CL21B223KB6WPN#
56	0.95	50	X7R	39nF	±10%	CL21B393KBCWPN#
57	0.95	50	X7R	47nF	±10%	CL21B473KBCWPN#
58	0.95	50	X7R	68nF	±10%	CL21B683KBCWPN#
59	0.95	50	X7R	100nF	±10%	CL21B104KBCWPN#
60	1.35	50	X7R	100nF	±10%	CL21B104KBFWPN#
61	1.35	50	X7R	150nF	±10%	CL21B154KBFVPN#
62	1.35	50	X7R	180nF	±10%	CL21B184KBFVPN#
63	1.35	50	X7R	220nF	±10%	CL21B224KBFVPN#
64	1.35	50	X7R	330nF	±10%	CL21B334KBFVPN#
65	1.35	50	X7R	470nF	±10%	CL21B474KBFVPN#
66	1.35	50	X7R	680nF	±10%	CL21B684KBFVPN#
67	1.35	50	X7R	1uF	±10%	CL21B105KBFVPN#
68	1.45	50	X7R	1.5uF	±10%	CL21B155KBYVPN#
69	1.45	50	X7R	2.2uF	±10%	CL21B225KBYVPN#
70	1.45	50	X7S	2.2uF	±10%	CL21Y225KBYVPN#
71	1.50	50	X7S	3.3uF	±10%	CL21Y335KBBVPN#
72	1.50	50	X7S	4.7uF	±10%	CL21Y475KBBVPN#
73	0.70	100	X7R	470pF	±10%	CL21B471KC6WPN#
74	0.70	100	X7R	1nF	±10%	CL21B102KC6WPN#
75	0.70	100	X7R	1.5nF	±10%	CL21B152KC6WPN#
76	0.70	100	X7R	1.8nF	±10%	CL21B182KC6WPN#
77	0.70	100	X7R	2.2nF	±10%	CL21B222KC6WPN#
78	0.70	100	X7R	3.3nF	±10%	CL21B332KC6WPN#
79	0.70	100	X7R	4.7nF	±10%	CL21B472KC6WPN#
80	0.70	100	X7R	6.8nF	±10%	CL21B682KC6WPN#
81	0.70	100	X7R	10nF	±10%	CL21B103KC6WPN#
82	0.70	100	X7R	15nF	±10%	CL21B153KC6WPN#
83	0.70	100	X7R	22nF	±10%	CL21B223KC6WPN#
84	1.35	100	X7R	22nF	±10%	CL21B223KCFWPN#
85	1.35	100	X7R	33nF	±10%	CL21B333KCFWPN#
86	0.95	100	X7R	47nF	±10%	CL21B473KCCWPN#
87	1.35	100	X7R	47nF	±10%	CL21B473KCFWPN#
88	0.95	100	X7R	68nF	±10%	CL21B683KCCWPN#
89	1.35	100	X7R	100nF	±5%	CL21B104JCFWPN#
90	0.95	100	X7R	100nF	±10%	CL21B104KCCWPN#

General Capacitors

Size Code (inch/mm) : 0805/2012

No.	Thickness Max. (mm)	Rated Voltage (Vdc)	TCC	Capacitance	Capacitance Tolerance	Part Number
91	1.35	100	X7R	100nF	±10%	CL21B104KCFWPN#
92	1.35	100	X7R	150nF	±10%	CL21B154KCFVPN#
93	1.40	100	X7R	220nF	±10%	CL21B224KCQVPN#
94	1.45	100	X7S	330nF	±10%	CL21Y334KCYVPN#
95	1.45	100	X7R	470nF	±10%	CL21B474KCYVPN#
96	1.45	100	X7S	470nF	±10%	CL21Y474KCYVPN#
97	1.45	100	X7R	1uF	±10%	CL21B105KCYVPN#
98	1.45	100	X7S	1uF	±10%	CL21Y105KCYVPN#

Size Code (inch/mm) : 1206/3216

No.	Thickness Max. (mm)	Rated Voltage (Vdc)	TCC	Capacitance	Capacitance Tolerance	Part Number
1	1.90	4	X7T	33uF	±20%	CL31Z336MRKVPN#
2	1.90	4	X7T	47uF	±20%	CL31Z476MRKVPN#
3	1.90	6.3	X7R	15uF	±10%	CL31B156KQKVPN#
4	1.90	6.3	X7R	22uF	±10%	CL31B226KQKVPN#
5	1.90	6.3	X7R	22uF	±20%	CL31B226MQKVPN#
6	1.90	6.3	X7T	47uF	±20%	CL31Z476MQKVPN#
7	1.80	10	X7R	6.8uF	±10%	CL31B685KPHVPN#
8	1.80	10	X7R	10uF	±10%	CL31B106KPHVPN#
9	1.90	10	X7R	22uF	±10%	CL31B226KPKVPN#
10	1.80	16	X7R	2.2uF	±10%	CL31B225KOHVPN#
11	1.80	16	X7R	3.3uF	±10%	CL31B335KOHVPN#
12	1.80	16	X7R	4.7uF	±10%	CL31B475KOHVPN#
13	1.80	16	X7R	6.8uF	±10%	CL31B685KOHVPN#
14	1.80	16	X7R	10uF	±10%	CL31B106KOHVPN#
15	1.90	16	X7S	22uF	±20%	CL31Y226MOK6PN#
16	1.25	25	X7R	100nF	±10%	CL31B104KAPWPN#
17	1.25	25	X7R	220nF	±10%	CL31B224KAPWPN#
18	1.80	25	X7R	470nF	±10%	CL31B474KAHWPN#
19	1.25	25	X7R	680nF	±10%	CL31B684KAPWPN#
20	1.25	25	X7R	1uF	±10%	CL31B105KAPWPN#
21	1.80	25	X7R	1.5uF	±10%	CL31B155KAHVPN#
22	1.80	25	X7R	2.2uF	±10%	CL31B225KAHVPN#
23	1.80	25	X7R	3.3uF	±10%	CL31B335KAHVPN#
24	1.80	25	X7R	4.7uF	±10%	CL31B475KAHVPN#
25	1.80	25	X7R	6.8uF	±10%	CL31B685KAHVPN#
26	1.80	25	X7R	10uF	±10%	CL31B106KAHVPN#
27	1.90	25	X7R	10uF	±10%	CL31B106KAK6PO#
28	1.90	25	X7S	10uF	±10%	CL31Y106KAKVPN#
29	1.90	35	X7S	6.8uF	±10%	CL31Y685KLKVPN#
30	1.90	35	X7R	10uF	±10%	CL31B106KLK6PN#

General Capacitors

Size Code (inch/mm) : 1206/3216

No.	Thickness Max. (mm)	Rated Voltage (Vdc)	TCC	Capacitance	Capacitance Tolerance	Part Number
31	1.90	35	X7S	10uF	±10%	CL31Y106KLKVPN#
32	1.90	35	X7T	10uF	±10%	CL31Z106KLKVPN#
33	1.00	50	X7R	100nF	±10%	CL31B104KBCWPN#
34	1.25	50	X7R	100nF	±10%	CL31B104KBPWPN#
35	1.25	50	X7R	150nF	±10%	CL31B154KBPWPN#
36	1.25	50	X7R	220nF	±10%	CL31B224KBPWPN#
37	1.80	50	X7R	330nF	±10%	CL31B334KBHWPN#
38	1.80	50	X7R	470nF	±10%	CL31B474KBHWPN#
39	1.80	50	X7R	680nF	±10%	CL31B684KBHWPN#
40	1.80	50	X7R	1uF	±10%	CL31B105KBHWPN#
41	1.80	50	X7R	1.5uF	±10%	CL31B155KBHVPN#
42	1.80	50	X7R	2.2uF	±10%	CL31B225KBHVPN#
43	1.80	50	X7R	3.3uF	±10%	CL31B335KBHVPN#
44	1.80	50	X7R	4.7uF	±10%	CL31B475KBHVPN#
45	1.90	50	X7R	4.7uF	±10%	CL31B475KBKVPN#
46	1.90	50	X7S	4.7uF	±10%	CL31Y475KBKVPN#
47	1.90	50	X7S	6.8uF	±10%	CL31Y685KBKVPN#
48	1.90	50	X7R	10uF	±10%	CL31B106KBK6PN#
49	1.90	50	X7S	10uF	±10%	CL31Y106KBKVPN#
50	1.90	50	X7T	10uF	±10%	CL31Z106KBKVPN#
51	1.25	100	X7R	100nF	±10%	CL31B104KCPWPN#
52	1.25	100	X7R	220nF	±10%	CL31B224KCPWPN#
53	1.80	100	X7R	330nF	±10%	CL31B334KCHWPN#
54	1.80	100	X7R	470nF	±10%	CL31B474KCHWPN#
55	1.80	100	X7R	680nF	±10%	CL31B684KCHVPN#
56	1.80	100	X7R	1uF	±10%	CL31B105KCHVPN#
57	1.80	100	X7R	2.2uF	±10%	CL31B225KCHVPN#
58	1.80	100	X7S	2.2uF	±10%	CL31Y225KCHVPN#

General Capacitors

Size Code (inch/mm) : 1210/3225

No.	Thickness Max. (mm)	Rated Voltage (Vdc)	TCC	Capacitance	Capacitance Tolerance	Part Number
1	2.80	2.5	X7T	100uF	±20%	CL32Z107MSV6PN#
2	2.85	2.5	X7T	220uF	±20%	CL32Z227MSV6PN#
3	2.80	4	X7S	100uF	±20%	CL32Y107MRV6PN#
4	2.80	4	X7T	100uF	±20%	CL32Z107MRV6PN#
5	2.80	4	X7T	100uF	±20%	CL32Z107MRVVPN#
6	2.80	6.3	X7R	47uF	±10%	CL32B476KQVVPN#
7	2.80	6.3	X7T	47uF	±10%	CL32Z476KQVVPN#
8	2.80	6.3	X7S	47uF	±20%	CL32Y476MQVVPN#
9	2.80	6.3	X7T	100uF	±20%	CL32Z107MQV6PN#
10	2.80	6.3	X7T	100uF	±20%	CL32Z107MQVVPN#
11	2.70	10	X7R	22uF	±10%	CL32B226KPJVPN#
12	2.80	10	X7S	47uF	±10%	CL32Y476KPVVPN#
13	2.80	10	X7S	47uF	±20%	CL32Y476MPVVPN#
14	2.70	16	X7R	10uF	±10%	CL32B106KOJVPN#
15	2.70	16	X7R	15uF	±10%	CL32B156KOJVPN#
16	2.70	16	X7R	22uF	±10%	CL32B226KOJVPN#
17	2.80	16	X7S	22uF	±10%	CL32Y226KOVVPN#
18	2.70	16	X7R	22uF	±20%	CL32B226MOJVPN#
19	2.70	25	X7R	4.7uF	±10%	CL32B475KAJVPN#
20	2.70	25	X7R	10uF	±10%	CL32B106KAJ4PN#
21	2.80	25	X7S	15uF	±10%	CL32Y156KAVVPN#
22	2.80	25	X7S	22uF	±10%	CL32Y226KAVVPN#
23	2.70	35	X7S	10uF	±10%	CL32Y106KLJVPN#
24	2.70	50	X7R	1uF	±10%	CL32B105KBJVPN#
25	2.70	50	X7R	2.2uF	±10%	CL32B225KBJVPN#
26	2.70	50	X7R	3.3uF	±10%	CL32B335KBJVPN#
27	2.70	50	X7R	4.7uF	±10%	CL32B475KBJVPN#
28	2.70	50	X7S	6.8uF	±10%	CL32Y685KBJVPN#
29	2.70	50	X7S	10uF	±10%	CL32Y106KBJVPN#
30	2.80	50	X7R	10uF	±10%	CL32B106KBVVPO#
31	2.80	75	X7S	10uF	±10%	CL32Y106KTV6PN#
32	2.70	100	X7R	1uF	±10%	CL32B105KCJVPN#
33	2.70	100	X7R	2.2uF	±10%	CL32B225KCJVPN#
34	2.20	100	X7S	3.3uF	±10%	CL32Y335KCIVPN#
35	2.20	100	X7S	4.7uF	±10%	CL32Y475KCIVPN#
36	2.20	100	X7S	4.7uF	±20%	CL32Y475MCIVPN#
37	2.80	100	X7S	10uF	±10%	CL32Y106KCV6PN#

Mid/High Voltage Capacitors

Features

- Manufactured by state-of-the-art facilities, recommended for registration of ISO 9001 & IATF 16949
- Meet AEC-Q200 and JEDEC-020-D qualified products.
- RoHS compliant products.
- Voltage rating of 250V, 630V and 1000V.
- 3mm bending strength guaranteed.
- Operating temperature range : -55 to 125°C.
- X7R dielectric components have BME and metal-epoxy terminations with a Ni/Sn plated overcoat.
- C0G dielectric components contain BME and copper terminations with a Ni/Sn plated overcoat.

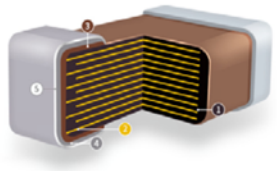

❶ Ceramic Body
❷ Electrode (Ni)
❸ Termination (Cu or Cu+Metal Epoxy)
❹ Plating (Ni)
⑤ Plating (Sn)

Applications

- Powertrain, Safety, Body & Chassis, Convenience, Infotainment, ADAS, EV

Structure and Dimensions

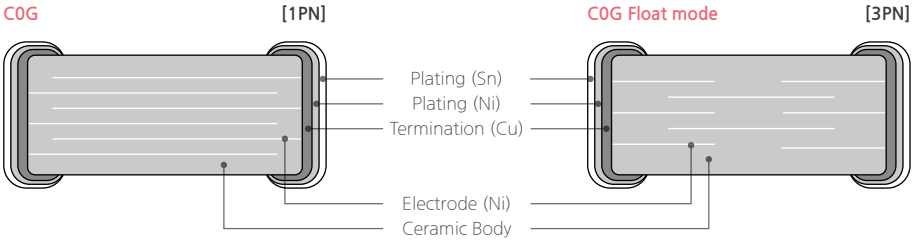

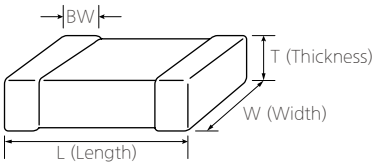

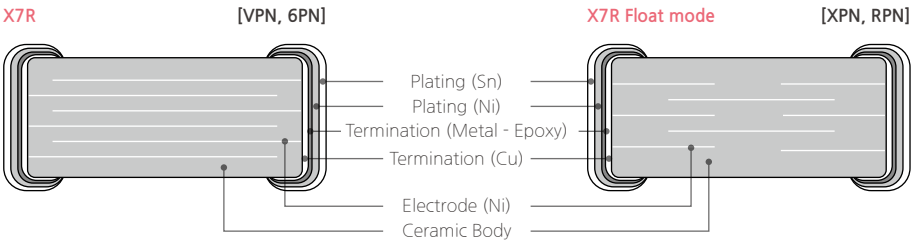

Mid/High Voltage Capacitors

Size Code	Thickness Code	Dimension (mm)				EIA (inch)
		L	W	T	BW	
10	8	1.60±0.10	0.80±0.10	0.80±0.10	0.30±0.20	0603
21	C	2.00±0.10	1.25±0.10	0.85±0.10	0.50+0.20/-0.30	0805
	F	2.00±0.10	1.25±0.10	1.25±0.10	0.50+0.20/-0.30	
	9	2.00±0.20	1.25±0.20	0.80±0.20	0.50+0.20/-0.30	
	Y	2.00±0.20	1.25±0.20	1.25±0.20	0.50+0.20/-0.30	
31	F	3.20±0.15	1.60±0.15	1.25±0.15	0.50±0.30	1206
	W	3.20±0.20	1.60±0.20	1.05±0.20	0.50±0.30	
	H	3.20±0.20	1.60±0.20	1.60±0.20	0.50±0.30	
32	U	3.20±0.30	2.50±0.20	1.80±0.20	0.60±0.30	1210
	I	3.20±0.30	2.50±0.20	2.00±0.20	0.60±0.30	
	J	3.20±0.30	2.50±0.20	2.50±0.20	0.60±0.30	
	V	3.20±0.40	2.50±0.30	2.50±0.30	0.60±0.30	

※ This code has only typical specifications. Please refer to individual specifications.

Capacitance Table (C0G/X7R)

Category	TCC	Size Code (inch/mm)	Rated Voltage (Vdc)	Capacitance (pF: 10, 100 / nF: 1, 10, 100 / uF: 1)	Capacitance Range
AEC-Q200 Mid/High Voltage	C0G (125℃)	0603/1608	250		10pF - 1nF
		0805/2012	250		10pF - 10nF
			630		10pF - 560pF
		1206/3216	250		10pF - 33nF
			630		10pF - 10nF
			1000		10pF - 1nF
		1210/3225	630		15nF - 33nF
			1000		1nF - 22nF
	X7R (125℃)	0805/2012	250		220pF - 22nF
		1206/3216	250		22nF - 100nF
			630		220pF - 22nF
			1000		1nF - 10nF
		1210/3225	250		220nF - 220nF
			630		4.7nF - 47nF
			1000		22nF - 22nF

Product LineUp (C0G)

Size Code (inch/mm) : 0603/1608

No.	Thickness Max. (mm)	Rated Voltage (Vdc)	TCC	Capacitance	Capacitance Tolerance	Part Number
1	0.90	250	C0G	10pF	±5%	CL10C100JE81PN#
2	0.90	250	C0G	22pF	±5%	CL10C220JE81PN#
3	0.90	250	C0G	33pF	±5%	CL10C330JE81PN#
4	0.90	250	C0G	47pF	±5%	CL10C470JE81PN#
5	0.90	250	C0G	56pF	±5%	CL10C560JE81PN#

Mid/High Voltage Capacitors

Size Code (inch/mm) : 0603/1608

No.	Thickness Max. (mm)	Rated Voltage (Vdc)	TCC	Capacitance	Capacitance Tolerance	Part Number
6	0.90	250	C0G	68pF	±5%	CL10C680JE81PN#
7	0.90	250	C0G	82pF	±5%	CL10C820JE81PN#
8	0.90	250	C0G	100pF	±5%	CL10C101JE81PN#
9	0.90	250	C0G	220pF	±5%	CL10C221JE81PN#
10	0.90	250	C0G	330pF	±5%	CL10C331JE81PN#
11	0.90	250	C0G	390pF	±5%	CL10C391JE81PN#
12	0.90	250	C0G	470pF	±5%	CL10C471JE81PN#
13	0.90	250	C0G	560pF	±5%	CL10C561JE81PN#
14	0.90	250	C0G	680pF	±5%	CL10C681JE81PN#
15	0.90	250	C0G	820pF	±5%	CL10C821JE81PN#
16	0.90	250	C0G	1nF	±5%	CL10C102JE81PN#

Size Code (inch/mm) : 0805/2012

No.	Thickness Max. (mm)	Rated Voltage (Vdc)	TCC	Capacitance	Capacitance Tolerance	Part Number
1	0.95	250	C0G	10pF	±5%	CL21C100JEC3PN#
2	0.95	250	C0G	22pF	±5%	CL21C220JEC3PN#
3	0.95	250	C0G	47pF	±5%	CL21C470JEC3PN#
4	0.95	250	C0G	100pF	±5%	CL21C101JEC3PN#
5	0.95	250	C0G	220pF	±5%	CL21C221JEC3PN#
6	0.95	250	C0G	330pF	±5%	CL21C331JEC1PN#
7	0.95	250	C0G	390pF	±5%	CL21C391JEC1PN#
8	0.95	250	C0G	470pF	±5%	CL21C471JEC1PN#
9	1.35	250	C0G	560pF	±5%	CL21C561JEF1PN#
10	1.00	250	C0G	1nF	±5%	CL21C102JE91PN#
11	1.00	250	C0G	2.2nF	±5%	CL21C222JE91PN#
12	1.45	250	C0G	3.3nF	±5%	CL21C332JEY1PN#
13	1.45	250	C0G	4.7nF	±1%	CL21C472FEY1PN#
14	1.45	250	C0G	4.7nF	±5%	CL21C472JEY1PN#
15	1.45	250	C0G	10nF	±1%	CL21C103FEY1PN#
16	1.45	250	C0G	10nF	±5%	CL21C103JEY1PN#
17	0.95	630	C0G	10pF	±5%	CL21C100JHC3PN#
18	0.95	630	C0G	15pF	±5%	CL21C150JHC3PN#
19	0.95	630	C0G	22pF	±5%	CL21C220JHC3PN#
20	0.95	630	C0G	47pF	±5%	CL21C470JHC3PN#
21	0.95	630	C0G	68pF	±5%	CL21C680JHC3PN#
22	0.95	630	C0G	100pF	±5%	CL21C101JHC3PN#
23	0.95	630	C0G	220pF	±5%	CL21C221JHC3PN#
24	0.95	630	C0G	330pF	±5%	CL21C331JHC1PN#
25	0.95	630	C0G	390pF	±5%	CL21C391JHC1PN#
26	0.95	630	C0G	470pF	±5%	CL21C471JHC1PN#
27	1.35	630	C0G	560pF	±5%	CL21C561JHF1PN#

Mid/High Voltage Capacitors

Size Code (inch/mm) : 1206/3216

No.	Thickness Max. (mm)	Rated Voltage (Vdc)	TCC	Capacitance	Capacitance Tolerance	Part Number
1	1.40	250	C0G	10pF	±5%	CL31C100JEF3PN#
2	1.40	250	C0G	15pF	±5%	CL31C150JEF3PN#
3	1.40	250	C0G	22pF	±5%	CL31C220JEF3PN#
4	1.40	250	C0G	33pF	±5%	CL31C330JEF3PN#
5	1.40	250	C0G	47pF	±5%	CL31C470JEF3PN#
6	1.40	250	C0G	68pF	±5%	CL31C680JEF3PN#
7	1.40	250	C0G	100pF	±5%	CL31C101JEF3PN#
8	1.40	250	C0G	220pF	±5%	CL31C221JEF1PN#
9	1.40	250	C0G	330pF	±5%	CL31C331JEF1PN#
10	1.40	250	C0G	470pF	±5%	CL31C471JEF1PN#
11	1.40	250	C0G	680pF	±5%	CL31C681JEF1PN#
12	1.80	250	C0G	680pF	±5%	CL31C681JEH1PN#
13	1.80	250	C0G	1nF	±5%	CL31C102JEH1PN#
14	1.80	250	C0G	3.3nF	±5%	CL31C332JEH1PN#
15	1.80	250	C0G	4.7nF	±5%	CL31C472JEH1PN#
16	1.25	250	C0G	6.8nF	±5%	CL31C682JEW1PN#
17	1.25	250	C0G	8.2nF	±5%	CL31C822JEW1PN#
18	1.25	250	C0G	12nF	±5%	CL31C123JEW1PN#
19	1.80	250	C0G	22nF	±5%	CL31C223JEH1PN#
20	1.80	250	C0G	33nF	±5%	CL31C333JEH1PN#
21	1.40	630	C0G	10pF	±5%	CL31C100JHF3PN#
22	1.40	630	C0G	15pF	±5%	CL31C150JHF3PN#
23	1.40	630	C0G	22pF	±5%	CL31C220JHF3PN#
24	1.40	630	C0G	33pF	±5%	CL31C330JHF3PN#
25	1.40	630	C0G	47pF	±5%	CL31C470JHF3PN#
26	1.40	630	C0G	56pF	±5%	CL31C560JHF3PN#
27	1.40	630	C0G	68pF	±5%	CL31C680JHF3PN#
28	1.40	630	C0G	100pF	±5%	CL31C101JHF3PN#
29	1.40	630	C0G	150pF	±5%	CL31C151JHF1PN#
30	1.40	630	C0G	220pF	±5%	CL31C221JHF1PN#
31	1.40	630	C0G	330pF	±5%	CL31C331JHF1PN#
32	1.00	630	C0G	390pF	±5%	CL31C391JHC3PN#
33	1.40	630	C0G	470pF	±5%	CL31C471JHF1PN#
34	1.40	630	C0G	680pF	±2%	CL31C681GHF1PN#
35	1.40	630	C0G	680pF	±5%	CL31C681JHF1PN#
36	1.80	630	C0G	1nF	±2%	CL31C102GHH1PN#
37	1.80	630	C0G	1nF	±5%	CL31C102JHH1PN#
38	1.80	630	C0G	1.2nF	±2%	CL31C122GHH1PN#
39	1.80	630	C0G	1.5nF	±2%	CL31C152GHH1PN#
40	1.80	630	C0G	1.5nF	±5%	CL31C152JHH1PN#
41	1.80	630	C0G	1.8nF	±5%	CL31C182JHH1PN#
42	1.80	630	C0G	2.2nF	±2%	CL31C222GHH1PN#
43	1.80	630	C0G	2.2nF	±5%	CL31C222JHH1PN#

Mid/High Voltage Capacitors

Size Code (inch/mm) : 1206/3216

No.	Thickness Max. (mm)	Rated Voltage (Vdc)	TCC	Capacitance	Capacitance Tolerance	Part Number
44	1.80	630	C0G	3.3nF	±2%	CL31C332GHH1PN#
45	1.80	630	C0G	3.3nF	±5%	CL31C332JHH1PN#
46	1.80	630	C0G	3.9nF	±2%	CL31C392GHH1PN#
47	1.80	630	C0G	3.9nF	±5%	CL31C392JHH1PN#
48	1.80	630	C0G	4.7nF	±2%	CL31C472GHH1PN#
49	1.80	630	C0G	4.7nF	±5%	CL31C472JHH1PN#
50	1.80	630	C0G	8.2nF	±5%	CL31C822JHH3PN#
51	1.80	630	C0G	10nF	±5%	CL31C103JHH3PN#
52	1.40	1000	C0G	10pF	±5%	CL31C100JIF3PN#
53	1.40	1000	C0G	22pF	±5%	CL31C220JIF3PN#
54	1.40	1000	C0G	47pF	±5%	CL31C470JIF3PN#
55	1.40	1000	C0G	56pF	±5%	CL31C560JIF3PN#
56	1.40	1000	C0G	100pF	±5%	CL31C101JIF3PN#
57	1.80	1000	C0G	220pF	±5%	CL31C221JIH3PN#
58	1.80	1000	C0G	470pF	±5%	CL31C471JIH3PN#
59	1.80	1000	C0G	1nF	±5%	CL31C102JIH3PN#

Size Code (inch/mm) : 1210/3225

No.	Thickness Max. (mm)	Rated Voltage (Vdc)	TCC	Capacitance	Capacitance Tolerance	Part Number
1	2.20	630	C0G	15nF	±5%	CL32C153JHI3PN#
2	2.70	630	C0G	22nF	±5%	CL32C223JHJ1PN#
3	2.70	630	C0G	27nF	±5%	CL32C273JHJ1PN#
4	2.70	630	C0G	33nF	±5%	CL32C333JHJ1PN#
5	2.20	1000	C0G	1nF	±5%	CL32C102JII3PN#
6	2.20	1000	C0G	2.2nF	±5%	CL32C222JII3PN#
7	2.20	1000	C0G	8.2nF	±5%	CL32C822JII3PN#
8	2.70	1000	C0G	10nF	±5%	CL32C103JIJ3PN#
9	2.70	1000	C0G	15nF	±2%	CL32C153GIJ3PN#
10	2.70	1000	C0G	15nF	±5%	CL32C153JIJ3PN#
11	2.80	1000	C0G	22nF	±5%	CL32C223JIV1PN#

Mid/High Voltage Capacitors

Product LineUp (X7R)

Size Code (inch/mm) : 0805/2012

No.	Thickness Max. (mm)	Rated Voltage (Vdc)	TCC	Capacitance	Capacitance Tolerance	Part Number
1	0.95	250	X7R	220pF	±10%	CL21B221KECXPN#
2	0.95	250	X7R	1nF	±10%	CL21B102KECXPN#
3	0.95	250	X7R	2.2nF	±10%	CL21B222KECXPN#
4	0.95	250	X7R	2.7nF	±10%	CL21B272KECXPN#
5	0.95	250	X7R	3.3nF	±10%	CL21B332KECXPN#
6	0.95	250	X7R	4.7nF	±10%	CL21B472KECXPN#
7	1.35	250	X7R	6.8nF	±10%	CL21B682KEFXPN#
8	1.35	250	X7R	10nF	±10%	CL21B103KEFXPN#
9	1.35	250	X7R	15nF	±10%	CL21B153KEFXPN#
10	1.45	250	X7R	22nF	±10%	CL21B223KEY6PN#

Size Code (inch/mm) : 1206/3216

No.	Thickness Max. (mm)	Rated Voltage (Vdc)	TCC	Capacitance	Capacitance Tolerance	Part Number
1	1.40	250	X7R	22nF	±10%	CL31B223KEFXPN#
2	1.80	250	X7R	33nF	±10%	CL31B333KEHXPN#
3	1.80	250	X7R	47nF	±10%	CL31B473KEHVPN#
4	1.80	250	X7R	68nF	±10%	CL31B683KEHVPN#
5	1.80	250	X7R	100nF	±10%	CL31B104KEHVPN#
6	1.40	630	X7R	220pF	±10%	CL31B221KHFXPN#
7	1.40	630	X7R	330pF	±10%	CL31B331KHFXPN#
8	1.40	630	X7R	1nF	±10%	CL31B102KHFXPN#
9	1.40	630	X7R	1.5nF	±10%	CL31B152KHFXPN#
10	1.40	630	X7R	2.2nF	±10%	CL31B222KHFXPN#
11	1.80	630	X7R	3.3nF	±10%	CL31B332KHHXPN#
12	1.40	630	X7R	4.7nF	±10%	CL31B472KHFXPN#
13	1.40	630	X7R	6.8nF	±10%	CL31B682KHFXPN#
14	1.40	630	X7R	10nF	±10%	CL31B103KHFXPN#
15	1.80	630	X7R	22nF	±10%	CL31B223KHHRPN#
16	1.40	1000	X7R	1nF	±10%	CL31B102KIFXPN#
17	1.40	1000	X7R	2.2nF	±10%	CL31B222KIFXPN#
18	1.80	1000	X7R	3.3nF	±10%	CL31B332KIHXPN#
19	1.80	1000	X7R	4.7nF	±10%	CL31B472KIHXPN#
20	1.80	1000	X7R	6.8nF	±10%	CL31B682KIHXPN#
21	1.80	1000	X7R	10nF	±10%	CL31B103KIHXPN#

Size Code (inch/mm) : 1210/3225

No.	Thickness Max. (mm)	Rated Voltage (Vdc)	TCC	Capacitance	Capacitance Tolerance	Part Number
1	2.00	250	X7R	220nF	±10%	CL32B224KEU6PN#
2	2.00	630	X7R	47nF	±10%	CL32B473KHURPN#
3	2.20	1000	X7R	22nF	±10%	CL32B223KIIXPN#

High Bending Strength Capacitors

High Bending Strength

Features

- Manufactured by state-of-the-art facilities, recommended for registration of ISO 9001 & IATF 16949
- AEC-Q200 and JEDEC-020-D qualified products.
- RoHS compliant products.
- X7*/X8* dielectric components have BME and metal-epoxy terminations with a Ni/Sn plated overcoat.
- 5mm bending strength guaranteed.
- Strong thermo-mechanical properties.

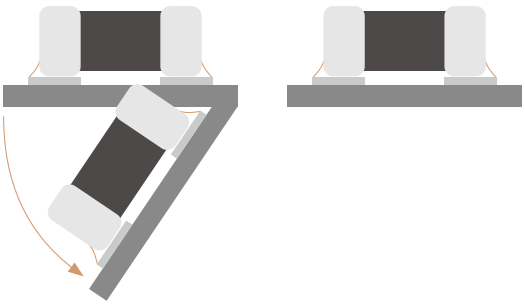

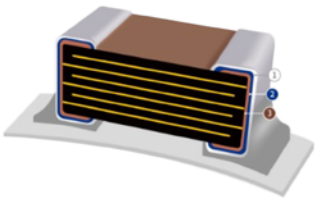

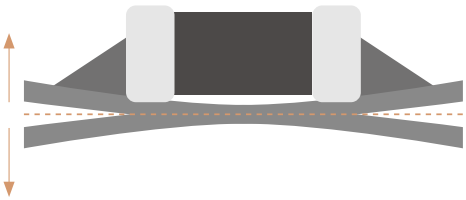

Applications

- Critical circuits and battery line circuits.
  (Cracking caused by flexing stress after board mounting is minimized)

Structure and Dimensions

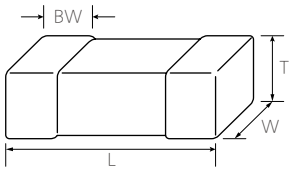

Standard Design **(VPJ, 6PJ)**

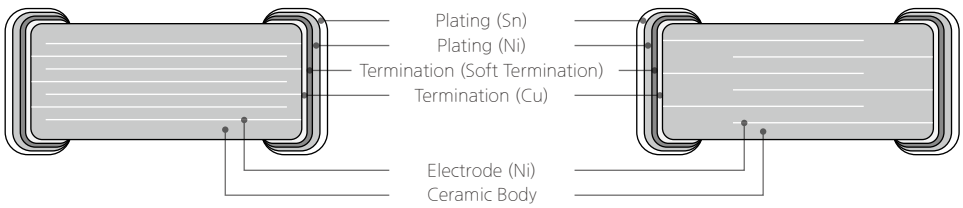

Open mode Design **(WPJ, PPJ)**

High Bending Strength Capacitors

Size Code	Thickness Code	Dimension (mm)				EIA (inch)
		L	W	T	BW	
05	5	1.00±0.10	0.50±0.05	0.50±0.05	0.25±0.10	0402
	6	1.00±0.20	0.50±0.20	0.50±0.20	0.25±0.10	
10	8	1.60±0.20	0.80±0.10	0.80±0.10	0.30±0.20	0603
	9	1.60±0.30	0.80±0.20	0.80±0.20	0.30±0.20	
21	C	2.00±0.30	1.25±0.20	0.85±0.10	0.50+0.20/-0.30	0805
	F	2.00±0.30	1.25±0.20	1.25±0.20	0.50+0.02/-0.30	
	Q	2.00±0.35	1.25±0.25	1.25±0.25	0.50+0.20/-0.30	
	Y	2.00±0.20	1.25±0.20	1.25+0.20/-0.15	0.50+0.20/-0.30	
	B	2.00±0.25	1.25±0.25	1.25+0.25/-0.20	0.50+0.20/-0.30	
31	H	3.20±0.30	1.60±0.30	1.60±0.30	0.60+0.40/-0.30	1206
	K	[1] 3.20±0.30	1.60±0.30	1.60+0.30/-0.25	0.60+0.40/-0.30	
32	I	3.20±0.40	2.50±0.30	2.00±0.30	0.60+0.40/-0.30	1210
	J	3.20±0.40	2.50±0.30	2.50±0.30	0.60+0.40/-0.30	
	V	3.20±0.40	2.50±0.35/-0.30	2.50+0.35/-0.30	0.60+0.40/-0.30	

※ This code has only typical specifications. Please refer to individual specifications.
※ ' Size exception : CL31Y106KBKVPJ# L 3.20±0.30, W 1.60±0.30, T 1.60±0.30

Capacitance Table (C0G/X7R/X7S/X7T/X8L/X8M)

Category	TCC	Size Code (inch/mm)	Rated Voltage (Vdc)	Capacitance	Capacitance Range
				pF / nF / uF (1 · 10 · 100 · 1 · 10 · 100)	
AEC-Q200 Soft Termination (5mm)	C0G (125℃)	1210/3225	630		33nF - 33nF
	X7R (125℃)	0402/1005	10		100nF - 100nF
			16		47nF - 220nF
			25		10nF - 220nF
			50		10nF - 10nF
		0603/1608	6.3		1uF - 1uF
			10		150nF - 220nF
			16		10nF - 1uF
			25		1nF - 1uF
			35		1uF - 1uF
			50		1nF - 1uF
			100		1nF - 100nF
		0805/2012	6.3		4.7uF - 10uF
			10		2.2uF - 10uF
			16		330nF - 4.7uF
			25		1nF - 4.7uF
			35		2.2uF - 4.7uF
			50		1nF - 2.2uF
			100		1nF - 470nF

High Bending Strength Capacitors

Category	TCC	Size Code (inch/mm)	Rated Voltage (Vdc)	Capacitance Range
AEC-Q200 Soft Termination (5mm)	X7R (125℃)	1206/3216	6.3	22uF - 22uF
			10	10uF - 22uF
			16	1uF - 10uF
			25	100nF - 10uF
			35	10uF - 10uF
			50	100nF - 10uF
			100	100nF - 2.2uF
		1210/3225	6.3	47uF - 47uF
			10	22uF - 22uF
			16	22uF - 22uF
			25	10uF - 10uF
			50	1uF - 10uF
			100	1uF - 4.7uF
	X7S (125℃)	0402/1005	10	330nF - 1uF
			16	220nF - 220nF
		0603/1608	6.3	2.2uF - 4.7uF
			10	4.7uF - 4.7uF
			16	2.2uF - 2.2uF
			25	2.2uF - 2.2uF
		0805/2012	6.3	10uF - 10uF
			10	2.2uF - 10uF
			16	10uF - 10uF
			25	4.7uF - 10uF
			35	4.7uF - 4.7uF
			50	2.2uF - 4.7uF
			75	1uF - 1uF
			100	150nF - 1uF
		1206/3216	16	22uF - 22uF
			25	10uF - 10uF
			35	10uF - 10uF
			50	4.7uF - 10uF
			75	2.2uF - 2.2uF
			100	2.2uF - 2.2uF
		1210/3225	6.3	47uF - 47uF
			10	47uF - 47uF
			25	15uF - 22uF
			50	6.8uF - 10uF
			75	10uF - 10uF
			100	3.3uF - 10uF
	X7T (125℃)	0603/1608	4	10uF - 10uF
			6.3	4.7uF - 10uF
		0805/2012	4	22uF - 22uF
			6.3	22uF - 22uF
		1206/3216	4	47uF - 47uF
			6.3	47uF - 47uF
		1210/3225	2.5	100uF - 100uF
			4	100uF - 100uF
			6.3	100uF - 100uF

High Bending Strength Capacitors

Category	TCC	Size Code (inch/mm)	Rated Voltage (Vdc)	Capacitance	Capacitance Range
				pF / nF / uF (1 / 10 / 100 / 1 / 10 / 100)	
AEC-Q200 Soft Termination (5mm)	X8L (150℃)	0603/1608	50		1uF - 1uF
		0805/2012	16		1uF - 1uF
			25		470nF - 1uF
			35		470nF - 4.7uF
			50		470nF - 470nF
		1206/3216	10		22uF - 22uF
			100		1uF - 1uF
		1210/3225	100		4.7uF - 4.7uF
	X8M (150℃)	0805/2012	16		10uF - 10uF

Product LineUp (C0G)

Size Code (inch/mm) : 1210/3225

No.	Thickness Max. (mm)	Rated Voltage (Vdc)	TCC	Capacitance	Capacitance Tolerance	Part Number
1	2.80	630	C0G	33nF	±5%	CL32C333JHJ6PJ#

Product LineUp (X7R/X7S/X7T)

Size Code (inch/mm) : 0402/1005

No.	Thickness Max. (mm)	Rated Voltage (Vdc)	TCC	Capacitance	Capacitance Tolerance	Part Number
1	0.55	10	X7R	100nF	±10%	CL05B104KP5VPJ#
2	0.55	10	X7S	330nF	±10%	CL05Y334KP5VPJ#
3	0.60	10	X7S	470nF	±10%	CL05Y474KP5VPJ#
4	0.70	10	X7S	680nF	±10%	CL05Y684KP6VPJ#
5	0.70	10	X7S	1uF	±10%	CL05Y105KP6VPJ#
6	0.55	16	X7R	47nF	±10%	CL05B473KO5VPJ#
7	0.55	16	X7R	68nF	±10%	CL05B683KO5VPJ#
8	0.55	16	X7R	100nF	±10%	CL05B104KO5VPJ#
9	0.55	16	X7R	220nF	±10%	CL05B224KO5VPJ#
10	0.55	16	X7S	220nF	±10%	CL05Y224KO5VPJ#
11	0.55	25	X7R	10nF	±10%	CL05B103KA5VPJ#
12	0.55	25	X7R	220nF	±10%	CL05B224KA5VPJ#
13	0.55	50	X7R	10nF	±10%	CL05B103KB5VPJ#

High Bending Strength Capacitors

Size Code (inch/mm) : 0603/1608

No.	Thickness Max. (mm)	Rated Voltage (Vdc)	TCC	Capacitance	Capacitance Tolerance	Part Number
1	1.00	4	X7T	10uF	±20%	CL10Z106MR9VPJ#
2	0.90	6.3	X7R	1uF	±10%	CL10B105KQ8VPJ#
3	0.90	6.3	X7S	2.2uF	±10%	CL10Y225KQ8VPJ#
4	1.00	6.3	X7S	4.7uF	±10%	CL10Y475KQ96PJ#
5	1.00	6.3	X7T	4.7uF	±20%	CL10Z475MQ96PJ#
6	1.00	6.3	X7T	10uF	±20%	CL10Z106MQ9VPJ#
7	0.90	10	X7R	150nF	±10%	CL10B154KP8VPJ#
8	0.90	10	X7R	220nF	±10%	CL10B224KP8VPJ#
9	1.00	10	X7S	4.7uF	±10%	CL10Y475KP96PJ#
10	0.90	16	X7R	10nF	±10%	CL10B103KO8WPJ#
11	0.90	16	X7R	15nF	±10%	CL10B153KO8VPJ#
12	0.90	16	X7R	33nF	±10%	CL10B333KO8VPJ#
13	0.90	16	X7R	47nF	±10%	CL10B473KO8VPJ#
14	0.90	16	X7R	68nF	±10%	CL10B683KO8VPJ#
15	0.90	16	X7R	100nF	±10%	CL10B104KO8VPJ#
16	0.90	16	X7R	150nF	±10%	CL10B154KO8VPJ#
17	0.90	16	X7R	220nF	±10%	CL10B224KO8VPJ#
18	0.90	16	X7R	330nF	±10%	CL10B334KO8VPJ#
19	0.90	16	X7R	470nF	±10%	CL10B474KO8VPJ#
20	0.90	16	X7R	1uF	±10%	CL10B105KO8VPJ#
21	1.00	16	X7S	2.2uF	±10%	CL10Y225KO96PJ#
22	0.90	25	X7R	1nF	±10%	CL10B102KA8WPJ#
23	0.90	25	X7R	1.5nF	±10%	CL10B152KA8WPJ#
24	0.90	25	X7R	2.2nF	±10%	CL10B222KA8WPJ#
25	0.90	25	X7R	3.3nF	±10%	CL10B332KA8WPJ#
26	0.90	25	X7R	4.7nF	±10%	CL10B472KA8WPJ#
27	0.90	25	X7R	6.8nF	±10%	CL10B682KA8WPJ#
28	0.90	25	X7R	10nF	±10%	CL10B103KA8WPJ#
29	0.90	25	X7R	15nF	±10%	CL10B153KA8VPJ#
30	0.90	25	X7R	22nF	±10%	CL10B223KA8VPJ#
31	0.90	25	X7R	33nF	±10%	CL10B333KA8VPJ#
32	0.90	25	X7R	47nF	±10%	CL10B473KA8VPJ#
33	0.90	25	X7R	68nF	±10%	CL10B683KA8VPJ#
34	0.90	25	X7R	100nF	±10%	CL10B104KA8VPJ#
35	0.90	25	X7R	150nF	±10%	CL10B154KA8VPJ#
36	0.90	25	X7R	220nF	±10%	CL10B224KA8VPJ#
37	0.90	25	X7R	470nF	±10%	CL10B474KA8VPJ#
38	0.90	25	X7R	1uF	±10%	CL10B105KA8VPJ#
39	1.00	25	X7S	2.2uF	±10%	CL10Y225KA96PJ#
40	1.00	35	X7R	1uF	±10%	CL10B105KL9VPJ#
41	0.90	50	X7R	1nF	±10%	CL10B102KB8WPJ#
42	0.90	50	X7R	1.5nF	±10%	CL10B152KB8WPJ#
43	0.90	50	X7R	2.2nF	±10%	CL10B222KB8WPJ#
44	0.90	50	X7R	3.3nF	±10%	CL10B332KB8WPJ#
45	0.90	50	X7R	4.7nF	±10%	CL10B472KB8WPJ#

High Bending Strength Capacitors

Size Code (inch/mm) : 0603/1608

No.	Thickness Max. (mm)	Rated Voltage (Vdc)	TCC	Capacitance	Capacitance Tolerance	Part Number
46	0.90	50	X7R	6.8nF	±10%	CL10B682KB8WPJ#
47	0.90	50	X7R	10nF	±10%	CL10B103KB8WPJ#
48	0.90	50	X7R	15nF	±10%	CL10B153KB8VPJ#
49	0.90	50	X7R	22nF	±10%	CL10B223KB8VPJ#
50	0.90	50	X7R	33nF	±10%	CL10B333KB8VPJ#
51	0.90	50	X7R	47nF	±10%	CL10B473KB8VPJ#
52	0.90	50	X7R	68nF	±10%	CL10B683KB8VPJ#
53	0.90	50	X7R	100nF	±10%	CL10B104KB8VPJ#
54	0.90	50	X7R	150nF	±10%	CL10B154KB8VPJ#
55	0.90	50	X7R	220nF	±10%	CL10B224KB8VPJ#
56	0.90	50	X7R	220nF	±10%	CL10B224KB8VPL#
57	0.90	50	X7R	220nF	±20%	CL10B224MB8VPL#
58	0.90	50	X7R	330nF	±10%	CL10B334KB8VPJ#
59	0.90	50	X7R	470nF	±10%	CL10B474KB8VPJ#
60	1.00	50	X7R	1uF	±10%	CL10B105KB9VPJ#
61	0.90	100	X7R	1nF	±10%	CL10B102KC8WPJ#
62	0.90	100	X7R	1.5nF	±10%	CL10B152KC8WPJ#
63	0.90	100	X7R	2.2nF	±10%	CL10B222KC8WPJ#
64	0.90	100	X7R	3.3nF	±10%	CL10B332KC8WPJ#
65	0.90	100	X7R	4.7nF	±10%	CL10B472KC8WPJ#
66	0.90	100	X7R	6.8nF	±10%	CL10B682KC8WPJ#
67	0.90	100	X7R	10nF	±10%	CL10B103KC8WPJ#
68	0.90	100	X7R	15nF	±10%	CL10B153KC8VPJ#
69	0.90	100	X7R	22nF	±10%	CL10B223KC8VPJ#
70	0.90	100	X7R	33nF	±10%	CL10B333KC8VPJ#
71	0.90	100	X7R	47nF	±10%	CL10B473KC8VPJ#
72	0.90	100	X7R	68nF	±10%	CL10B683KC8VPJ#
73	0.90	100	X7R	100nF	±10%	CL10B104KC8VPJ#

Size Code (inch/mm) : 0805/2012

No.	Thickness Max. (mm)	Rated Voltage (Vdc)	TCC	Capacitance	Capacitance Tolerance	Part Number
1	1.45	4	X7T	22uF	±20%	CL21Z226MRYVPJ#
2	1.50	6.3	X7R	4.7uF	±10%	CL21B475KQQVPJ#
3	1.45	6.3	X7R	10uF	±10%	CL21B106KQY6PJ#
4	1.50	6.3	X7S	10uF	±10%	CL21Y106KQQVPJ#
5	1.45	6.3	X7T	22uF	±20%	CL21Z226MQYVPJ#
6	1.45	10	X7R	2.2uF	±10%	CL21B225KPFVPJ#
7	1.45	10	X7S	2.2uF	±10%	CL21Y225KPYVPJ#
8	1.50	10	X7S	4.7uF	±10%	CL21Y475KPBVPJ#
9	1.45	10	X7R	10uF	±10%	CL21B106KPY6PJ#
10	1.50	10	X7S	10uF	±10%	CL21Y106KPQVPJ#

High Bending Strength Capacitors

Size Code (inch/mm) : 0805/2012

No.	Thickness Max. (mm)	Rated Voltage (Vdc)	TCC	Capacitance	Capacitance Tolerance	Part Number
11	1.45	16	X7R	330nF	±10%	CL21B334KOFVPJ#
12	1.45	16	X7R	470nF	±10%	CL21B474KOFVPJ#
13	1.45	16	X7R	1uF	±10%	CL21B105KOFVPJ#
14	1.50	16	X7R	2.2uF	±10%	CL21B225KOQVPJ#
15	1.50	16	X7R	3.3uF	±10%	CL21B335KOQVPJ#
16	1.50	16	X7R	4.7uF	±10%	CL21B475KOQVPJ#
17	1.50	16	X7S	10uF	±10%	CL21Y106KOBVPJ#
18	0.95	25	X7R	1nF	±10%	CL21B102KACWPJ#
19	0.95	25	X7R	1.5nF	±10%	CL21B152KACWPJ#
20	0.95	25	X7R	2.2nF	±10%	CL21B222KACWPJ#
21	0.95	25	X7R	3.3nF	±10%	CL21B332KACWPJ#
22	0.95	25	X7R	4.7nF	±10%	CL21B472KACWPJ#
23	0.95	25	X7R	6.8nF	±10%	CL21B682KACWPJ#
24	1.45	25	X7R	15nF	±10%	CL21B153KAFWPJ#
25	1.45	25	X7R	22nF	±10%	CL21B223KAFWPJ#
26	1.45	25	X7R	68nF	±10%	CL21B683KAFWPJ#
27	1.45	25	X7R	100nF	±10%	CL21B104KAFWPJ#
28	1.45	25	X7R	330nF	±10%	CL21B334KAFVPJ#
29	1.45	25	X7R	470nF	±10%	CL21B474KAFVPJ#
30	1.45	25	X7R	1uF	±10%	CL21B105KAFVPJ#
31	1.45	25	X7R	2.2uF	±10%	CL21B225KAFVPJ#
32	1.50	25	X7R	4.7uF	±10%	CL21B475KAB6PJ#
33	1.50	25	X7S	4.7uF	±10%	CL21Y475KABVPJ#
34	1.50	25	X7S	10uF	±10%	CL21Y106KABVPJ#
35	1.45	35	X7R	2.2uF	±10%	CL21B225KLYVPJ#
36	1.50	35	X7R	3.3uF	±10%	CL21B335KLB6PJ#
37	1.50	35	X7R	4.7uF	±10%	CL21B475KLB6PJ#
38	1.50	35	X7S	4.7uF	±10%	CL21Y475KLBVPJ#
39	0.95	50	X7R	1nF	±10%	CL21B102KBCWPJ#
40	0.95	50	X7R	1.5nF	±10%	CL21B152KBCWPJ#
41	0.95	50	X7R	2.2nF	±10%	CL21B222KBCWPJ#
42	0.95	50	X7R	3.3nF	±10%	CL21B332KBCWPJ#
43	0.95	50	X7R	4.7nF	±10%	CL21B472KBCWPJ#
44	0.95	50	X7R	6.8nF	±10%	CL21B682KBCWPJ#
45	0.95	50	X7R	10nF	±10%	CL21B103KBCWPJ#
46	1.45	50	X7R	15nF	±10%	CL21B153KBFWPJ#
47	1.45	50	X7R	22nF	±10%	CL21B223KBFWPJ#
48	1.45	50	X7R	47nF	±10%	CL21B473KBFWPJ#
49	1.45	50	X7R	68nF	±10%	CL21B683KBFWPJ#
50	1.45	50	X7R	100nF	±10%	CL21B104KBFWPJ#
51	1.45	50	X7R	150nF	±10%	CL21B154KBFVPJ#
52	1.45	50	X7R	220nF	±10%	CL21B224KBFVPJ#
53	1.45	50	X7R	330nF	±10%	CL21B334KBFVPJ#
54	1.45	50	X7R	470nF	±10%	CL21B474KBFVPJ#
55	1.45	50	X7R	1uF	±10%	CL21B105KBFVPJ#

High Bending Strength Capacitors

Size Code (inch/mm) : 0805/2012

No.	Thickness Max. (mm)	Rated Voltage (Vdc)	TCC	Capacitance	Capacitance Tolerance	Part Number
56	1.45	50	X7R	2.2uF	±10%	CL21B225KBYVPJ#
57	1.45	50	X7S	2.2uF	±10%	CL21Y225KBYVPJ#
58	1.50	50	X7S	4.7uF	±10%	CL21Y475KBBVPJ#
59	1.45	75	X7S	1uF	±10%	CL21Y105KTFVPJ#
60	0.95	100	X7R	1nF	±10%	CL21B102KCCWPJ#
61	0.95	100	X7R	1.5nF	±10%	CL21B152KCCWPJ#
62	0.95	100	X7R	2.2nF	±10%	CL21B222KCCWPJ#
63	0.95	100	X7R	3.3nF	±10%	CL21B332KCCWPJ#
64	0.95	100	X7R	4.7nF	±10%	CL21B472KCCWPJ#
65	0.95	100	X7R	6.8nF	±10%	CL21B682KCCWPJ#
66	0.95	100	X7R	10nF	±10%	CL21B103KCCWPJ#
67	1.45	100	X7R	15nF	±10%	CL21B153KCFWPJ#
68	1.45	100	X7R	22nF	±10%	CL21B223KCFWPJ#
69	1.45	100	X7R	47nF	±10%	CL21B473KCFWPJ#
70	1.45	100	X7R	68nF	±10%	CL21B683KCFWPJ#
71	1.45	100	X7R	100nF	±10%	CL21B104KCFWPJ#
72	1.45	100	X7R	150nF	±10%	CL21B154KCFVPJ#
73	1.45	100	X7S	150nF	±10%	CL21Y154KCFVPJ#
74	1.45	100	X7R	220nF	±10%	CL21B224KCFVPJ#
75	1.45	100	X7R	470nF	±10%	CL21B474KCFVPJ#
76	1.45	100	X7S	470nF	±10%	CL21Y474KCFVPJ#
77	1.45	100	X7S	470nF	±10%	CL21Y474KCYVPJ#
78	1.45	100	X7S	1uF	±10%	CL21Y105KCFVPJ#

Size Code (inch/mm) : 1206/3216

No.	Thickness Max. (mm)	Rated Voltage (Vdc)	TCC	Capacitance	Capacitance Tolerance	Part Number
1	1.90	4	X7T	47uF	±20%	CL31Z476MRKVPJ#
2	1.90	6.3	X7R	22uF	±10%	CL31B226KQKVPJ#
3	1.90	6.3	X7R	22uF	±20%	CL31B226MQKVPJ#
4	1.90	6.3	X7T	47uF	±20%	CL31Z476MQKVPJ#
5	1.90	10	X7R	10uF	±10%	CL31B106KPKVPJ#
6	1.90	10	X7R	22uF	±10%	CL31B226KPKVPJ#
7	1.90	16	X7R	1uF	±10%	CL31B105KOHVPJ#
8	1.90	16	X7R	2.2uF	±10%	CL31B225KOHVPJ#
9	1.90	16	X7R	4.7uF	±10%	CL31B475KOHVPJ#
10	1.90	16	X7R	10uF	±10%	CL31B106KOHVPJ#
11	1.90	16	X7S	22uF	±20%	CL31Y226MOK6PJ#
12	1.90	25	X7R	100nF	±10%	CL31B104KAHVPJ#
13	1.90	25	X7R	220nF	±10%	CL31B224KAHVPJ#
14	1.90	25	X7R	1uF	±10%	CL31B105KAHVPJ#
15	1.90	25	X7R	2.2uF	±10%	CL31B225KAHVPJ#

High Bending Strength Capacitors

Size Code (inch/mm) : 1206/3216

No.	Thickness Max. (mm)	Rated Voltage (Vdc)	TCC	Capacitance	Capacitance Tolerance	Part Number
16	1.90	25	X7R	4.7uF	±10%	CL31B475KAHVPJ#
17	1.90	25	X7R	10uF	±10%	CL31B106KAHVPJ#
18	1.90	25	X7R	10uF	±10%	CL31B106KAK6PL#
19	1.90	25	X7S	10uF	±10%	CL31Y106KAKVPJ#
20	1.90	35	X7R	10uF	±10%	CL31B106KLK6PJ#
21	1.90	35	X7S	10uF	±10%	CL31Y106KLKVPJ#
22	1.90	50	X7R	100nF	±10%	CL31B104KBHVPJ#
23	1.90	50	X7R	220nF	±10%	CL31B224KBHVPJ#
24	1.90	50	X7R	470nF	±10%	CL31B474KBHVPJ#
25	1.90	50	X7R	1uF	±10%	CL31B105KBHVPJ#
26	1.90	50	X7R	2.2uF	±10%	CL31B225KBHVPJ#
27	1.90	50	X7R	4.7uF	±10%	CL31B475KBHVPJ#
28	1.90	50	X7R	4.7uF	±10%	CL31B475KBKVPJ#
29	1.90	50	X7S	4.7uF	±10%	CL31Y475KBKVPJ#
30	1.90	50	X7R	10uF	±10%	CL31B106KBK6PJ#
31	1.90	50	X7S	10uF	±10%	CL31Y106KBKVPJ#
32	1.90	75	X7S	2.2uF	±10%	CL31Y225KTHVPJ#
33	1.90	100	X7R	100nF	±10%	CL31B104KCHVPJ#
34	1.90	100	X7R	220nF	±10%	CL31B224KCHVPJ#
35	1.90	100	X7R	680nF	±10%	CL31B684KCHVPJ#
36	1.90	100	X7R	1uF	±10%	CL31B105KCHVPJ#
37	1.90	100	X7R	2.2uF	±10%	CL31B225KCHVPJ#
38	1.90	100	X7S	2.2uF	±10%	CL31Y225KCHVPJ#

Size Code (inch/mm) : 1210/3225

No.	Thickness Max. (mm)	Rated Voltage (Vdc)	TCC	Capacitance	Capacitance Tolerance	Part Number
1	2.85	2.5	X7T	100uF	±20%	CL32Z107MSV6PJ#
2	2.85	4	X7T	100uF	±20%	CL32Z107MRV6PJ#
3	2.85	4	X7T	100uF	±20%	CL32Z107MRVVPJ#
4	2.85	6.3	X7R	47uF	±10%	CL32B476KQVVPJ#
5	2.85	6.3	X7S	47uF	±20%	CL32Y476MQVVPJ#
6	2.85	6.3	X7T	100uF	±20%	CL32Z107MQV6PJ#
7	2.80	10	X7R	22uF	±10%	CL32B226KPJVPJ#
8	2.85	10	X7S	47uF	±10%	CL32Y476KPVVPJ#
9	2.85	10	X7S	47uF	±20%	CL32Y476MPVVPJ#
10	2.80	16	X7R	22uF	±10%	CL32B226KOJVPJ#
11	2.80	25	X7R	10uF	±10%	CL32B106KAJVPJ#
12	2.85	25	X7S	15uF	±10%	CL32Y156KAVVPJ#
13	2.85	25	X7S	22uF	±10%	CL32Y226KAVVPJ#
14	2.80	50	X7R	1uF	±10%	CL32B105KBJVPJ#
15	2.80	50	X7R	2.2uF	±10%	CL32B225KBJVPJ#

High Bending Strength Capacitors

Size Code (inch/mm) : 1210/3225

No.	Thickness Max. (mm)	Rated Voltage (Vdc)	TCC	Capacitance	Capacitance Tolerance	Part Number
16	2.80	50	X7R	4.7uF	±10%	CL32B475KBJVPJ#
17	2.80	50	X7S	6.8uF	±10%	CL32Y685KBJVPJ#
18	2.80	50	X7S	10uF	±10%	CL32Y106KBJVPJ#
19	2.85	50	X7R	10uF	±10%	CL32B106KBVVPL#
20	2.80	75	X7S	10uF	±10%	CL32Y106KTJ6PJ#
21	2.80	100	X7R	1uF	±10%	CL32B105KCJVPJ#
22	2.80	100	X7R	2.2uF	±10%	CL32B225KCJVPJ#
23	2.30	100	X7S	3.3uF	±10%	CL32Y335KCIVPJ#
24	2.30	100	X7R	4.7uF	±10%	CL32B475KCI6PJ#
25	2.30	100	X7S	4.7uF	±10%	CL32Y475KCIVPJ#
26	2.30	100	X7S	4.7uF	±20%	CL32Y475MCIVPJ#
27	2.80	100	X7S	10uF	±10%	CL32Y106KCJ6PJ#

Product LineUp (X8L/X8M)

Size Code (inch/mm) : 0402/1005

No.	Thickness Max. (mm)	Rated Voltage (Vdc)	TCC	Capacitance	Capacitance Tolerance	Part Number	Remarks
1	1.00	50	X8L	1uF	±10%	CL10E105KB9VPJ#	Derating B

Size Code (inch/mm) : 0805/2012

No.	Thickness Max. (mm)	Rated Voltage (Vdc)	TCC	Capacitance	Capacitance Tolerance	Part Number	Remarks
1	1.45	16	X8L	1uF	±10%	CL21E105KOFVPJ#	
2	1.50	16	X8M	10uF	±10%	CL21M106KOBVPJ#	Derating B
3	1.45	25	X8L	470nF	±10%	CL21E474KAFVPJ#	
4	1.45	25	X8L	1uF	±10%	CL21E105KAFVPJ#	
5	1.45	35	X8L	470nF	±10%	CL21E474KLFVPJ#	
6	1.45	35	X8L	1uF	±10%	CL21E105KLFVPJ#	
7	1.50	35	X8L	4.7uF	±10%	CL21E475KLBVPJ#	Derating B
8	1.45	50	X8L	470nF	±10%	CL21E474KBFVPJ#	

Size Code (inch/mm) : 1206/3216

No.	Thickness Max. (mm)	Rated Voltage (Vdc)	TCC	Capacitance	Capacitance Tolerance	Part Number	Remarks
1	1.90	10	X8L	22uF	±10%	CL31E226KPKVPJ#	Derating B
2	1.90	100	X8L	1uF	±10%	CL31E105KCHVPJ#	Derating B

Size Code (inch/mm) : 1210/3225

No.	Thickness Max. (mm)	Rated Voltage (Vdc)	TCC	Capacitance	Capacitance Tolerance	Part Number	Remarks
1	2.30	100	X8L	4.7uF	±10%	CL32E475KCIVPJ#	Derating B

※ ' Derating B : This MLCC should be applied with the derated voltage and temperature according to derating guide. Please refer to individual specifications.

Fail Safe Capacitors (Soft Termination 5mm)

Fail Safe

Features

- Designed to prevent circuit malfunction in the case of an internal short, caused by a crack which occurrs in a MLCC product.
- This also guarantees 5mm bending and prevents defects caused by PCB deformation.
- This product has the highest degree of safety among all MLCCs.
  - Series(Float) Design : Designed to operate like two MLCCs in a series
    Even if a defect such as a crack occurs on one side, the circuit can be protected on the other side
  - 5mm Bending Guarantee : Guarantees no bending cracks for board flex 5mm variants

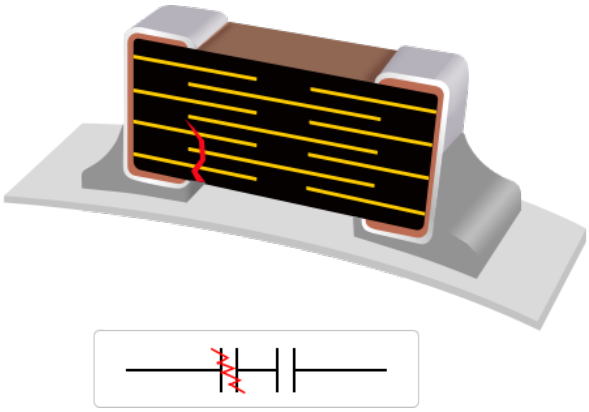

Applications

- All automotive application include 12V Battery line, circuit near hole and connector.

Structure and Dimensions

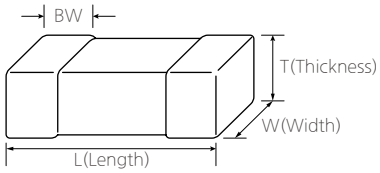

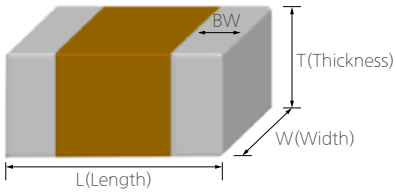

Size Code	Thickness Code	Dimension (mm)				EIA (inch)
		L	W	T	BW	
10	8	1.60±0.20	0.80±0.10	0.80±0.10	0.30±0.20	0603
21	F	2.00±0.30	1.25±0.20	1.25±0.20	0.5+0.2/-0.3	0805

※ This code has only typical specifications. Please refer to individual specifications.

Fail Safe Capacitors (Soft Termination 5mm)

Capacitance Table

Category	TCC	Size Code (inch/mm)	Rated Voltage (Vdc)	Capacitance									Capacitance Range
				pF			nF			uF			
					1		10		100	1		10	100	
AEC-Q200 Fail Safe/ Soft Termination (5mm)	X7R (125℃)	0603/1608	50				■							10nF - 22nF
			100				■							10nF - 22nF
		0805/2012	50				■	■	■					10nF - 100nF
			100				■	■	■					10nF - 100nF

Product LineUp (X7R)

Size Code (inch/mm) : 0603/1608

No.	Thickness Max. (mm)	Rated Voltage (Vdc)	TCC	Capacitance	Capacitance Tolerance	Part Number
1	0.90	50	X7R	10nF	±10%	CL10B103KB8XPJ#
2	0.90	50	X7R	15nF	±10%	CL10B153KB8XPJ#
3	0.90	50	X7R	22nF	±10%	CL10B223KB8XPJ#
4	0.90	100	X7R	10nF	±10%	CL10B103KC8XPJ#
5	0.90	100	X7R	15nF	±10%	CL10B153KC8XPJ#
6	0.90	100	X7R	22nF	±10%	CL10B223KC8XPJ#

Size Code (inch/mm) : 0805/2012

No.	Thickness Max. (mm)	Rated Voltage (Vdc)	TCC	Capacitance	Capacitance Tolerance	Part Number
1	1.45	50	X7R	10nF	±10%	CL21B103KBFXPJ#
2	1.45	50	X7R	100nF	±10%	CL21B104KBFXPJ#
3	1.45	100	X7R	10nF	±10%	CL21B103KCFXPJ#
4	1.45	100	X7R	68nF	±10%	CL21B683KCFXPJ#
5	1.45	100	X7R	100nF	±10%	CL21B104KCFXPJ#

High Temperature Capacitors

Features

- Manufactured by state-of-the-art facilities, recommended for registration of ISO 9001 & IATF 16949
- Meet AEC-Q200 and JEDEC-020-D qualified products.
- RoHS compliant products.
- Operating temperature range : -55 to 150°C.
- High reliability MLCC that ensure the heating environment of Powertrain network and EV high temperature products.

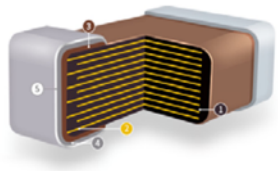

1. Ceramic Body
2. Electrode (Ni)
3. Termination (Cu or Cu+Metal Epoxy)
4. Plating (Ni)
5. Plating (Sn)

Applications

- Used in places with high power consumption and high operating temperature like Powertrain, Engine oil, Inverter, Lighting etc.

Size Code	Thickness Code	Dimension (mm)				EIA (inch)
		L	W	T	BW	
05	5	1.00±0.05	0.50±0.05	0.50±0.05	0.25±0.10	0402
10	8	1.60±0.10	0.80±0.10	0.80±0.10	0.30±0.20	0603
	9	1.60±0.20	0.80±0.20	0.80±0.20	0.30±0.20	
21	C	2.00±0.10	1.25±0.10	0.85±0.10	0.50+0.20/-0.30	0805
	F	2.00±0.10	1.25±0.10	1.25±0.10	0.50+0.20/-0.30	
	Q	2.00±0.15	1.25±0.15	1.25±0.15	0.50+0.20/-0.30	
	B	2.00±0.25	1.25±0.25	1.25±0.25	0.50+0.20/-0.30	
31	H	3.20±0.20	1.60±0.20	1.60±0.20	0.50±0.30	1206
	K	3.20±0.30	1.60±0.30	1.60±0.30	0.50±0.30	
32	I	3.20±0.30	2.50±0.20	2.00±0.20	0.60±0.30	1210
	J	3.20±0.30	2.50±0.20	2.50±0.20	0.60±0.30	
	V	3.20±0.40	2.50±0.30	2.50±0.30	0.60±0.30	

※ This code has only typical specifications. Please refer to individual specifications.

Capacitance Table (X8G/X8L/X8M)

Category	TCC	Size Code (inch/mm)	Rated Voltage (Vdc)	Capacitance									Capacitance Range
				pF				nF			uF		
				0.1	1	10	100	1	10	100	1	10	100	
AEC-Q200	X8G (150℃)	0402/1005	50											4.7pF - 1nF
			100											270pF - 1nF
		0603/1608	50											10pF - 680pF
			100											10pF - 1nF
		0805/2012	50											150pF - 6.8nF
			100											150pF - 1.5nF

High Temperature Capacitors

Category	TCC	Size Code (inch/mm)	Rated Voltage (Vdc)	Capacitance	Capacitance Range
				pF: 0.1 1 10 100 / nF: 1 10 100 / uF: 1 10 100	
AEC-Q200 High Temperature	X8L (150℃)/ X8M (150℃)	0402/1005	16		47nF - 47nF
			25		10nF - 100nF
			50		47nF - 100nF
		0603/1608	6.3		4.7uF - 4.7uF
			16		220nF - 220nF
			25		220nF - 220nF
			50		1nF - 1uF
			100		100nF - 100nF
		0805/2012	16		10uF - 10uF
			25		470nF - 470nF
			35		2.2uF - 4.7uF
			50		220nF - 220nF
		1206/3216	4		47uF - 47uF
			10		22uF - 22uF
			16		2.2uF - 2.2uF
			25		2.2uF - 10uF
			35		10uF - 10uF
			100		1uF - 2.2uF
		1210/3225	25		22uF - 22uF
			50		4.7uF - 10uF
			100		2.2uF - 4.7uF

Product LineUp (X8G)

Size Code (inch/mm) : 0402/1005

No.	Thickness Max. (mm)	Rated Voltage (Vdc)	TCC	Capacitance	Capacitance Tolerance	Part Number
1	0.55	50	X8G	4.7pF	±0.25pF	CL05G4R7CB51PN#
2	0.55	50	X8G	5.6pF	±0.1pF	CL05G5R6BB51PN#
3	0.55	50	X8G	5.6pF	±0.25pF	CL05G5R6CB51PN#
4	0.55	50	X8G	10pF	±5%	CL05G100JB51PN#
5	0.55	50	X8G	22pF	±5%	CL05G220JB51PN#
6	0.55	50	X8G	33pF	±5%	CL05G330JB51PN#
7	0.55	50	X8G	47pF	±5%	CL05G470JB51PN#
8	0.55	50	X8G	100pF	±5%	CL05G101JB51PN#
9	0.55	50	X8G	220pF	±5%	CL05G221JB51PN#
10	0.55	50	X8G	270pF	±5%	CL05G271JB51PN#
11	0.55	50	X8G	470pF	±5%	CL05G471JB51PN#
12	0.55	50	X8G	1nF	±5%	CL05G102JB51PN#
13	0.55	100	X8G	270pF	±5%	CL05G271JC51PN#
14	0.55	100	X8G	470pF	±5%	CL05G471JC51PN#
15	0.55	100	X8G	1nF	±5%	CL05G102JC51PN#

High Temperature Capacitors

Size Code (inch/mm) : 0603/1608

No.	Thickness Max. (mm)	Rated Voltage (Vdc)	TCC	Capacitance	Capacitance Tolerance	Part Number
1	0.90	50	X8G	10pF	±5%	CL10G100JB81PN#
2	0.90	50	X8G	15pF	±5%	CL10G150JB81PN#
3	0.90	50	X8G	47pF	±5%	CL10G470JB81PN#
4	0.90	50	X8G	100pF	±5%	CL10G101JB81PN#
5	0.90	50	X8G	220pF	±5%	CL10G221JB81PN#
6	0.90	50	X8G	330pF	±5%	CL10G331JB81PN#
7	0.90	50	X8G	470pF	±5%	CL10G471JB81PN#
8	0.90	50	X8G	680pF	±5%	CL10G681JB81PN#
9	0.90	100	X8G	10pF	±5%	CL10G100JC81PN#
10	0.90	100	X8G	15pF	±5%	CL10G150JC81PN#
11	0.90	100	X8G	22pF	±5%	CL10G220JC81PN#
12	0.90	100	X8G	47pF	±5%	CL10G470JC81PN#
13	0.90	100	X8G	100pF	±5%	CL10G101JC81PN#
14	0.90	100	X8G	220pF	±5%	CL10G221JC81PN#
15	0.90	100	X8G	330pF	±5%	CL10G331JC81PN#
16	0.90	100	X8G	470pF	±5%	CL10G471JC81PN#
17	0.90	100	X8G	680pF	±5%	CL10G681JC81PN#
18	0.90	100	X8G	1nF	±5%	CL10G102JC81PN#

Size Code (inch/mm) : 0805/2012

No.	Thickness Max. (mm)	Rated Voltage (Vdc)	TCC	Capacitance	Capacitance Tolerance	Part Number
1	0.95	50	X8G	150pF	±5%	CL21G151JBC1PN#
2	0.95	50	X8G	680pF	±5%	CL21G681JBC1PN#
3	0.95	100	X8G	820pF	±5%	CL21G821JCC1PN#
4	0.95	50	X8G	1.5nF	±5%	CL21G152JBC1PN#
5	0.95	50	X8G	4.7nF	±5%	CL21G472JBC1PN#
6	1.35	50	X8G	6.8nF	±5%	CL21G682JBF1PN#
7	0.95	100	X8G	150pF	±5%	CL21G151JCC1PN#
8	0.95	100	X8G	1.5nF	±5%	CL21G152JCC1PN#

Product LineUp (X8L/X8M)

Size Code (inch/mm) : 0402/1005

No.	Thickness Max. (mm)	Rated Voltage (Vdc)	TCC	Capacitance	Capacitance Tolerance	Part Number	Remarks
1	0.55	16	X8L	47nF	±10%	CL05E473KO5VPN#	
2	0.55	25	X8L	10nF	±10%	CL05E103KA5VPN#	
3	0.55	25	X8L	33nF	±10%	CL05E333KA54PN#	
4	0.55	25	X8L	47nF	±10%	CL05E473KA5VPN#	
5	0.55	25	X8L	100nF	±10%	CL05E104KA5VPN#	
6	0.55	50	X8L	47nF	±10%	CL05E473KB5VPN#	Derating B
7	0.55	50	X8L	100nF	±10%	CL05E104KB5VPN#	Derating B

High Temperature Capacitors

Size Code (inch/mm) : 0603/1608

No.	Thickness Max. (mm)	Rated Voltage (Vdc)	TCC	Capacitance	Capacitance Tolerance	Part Number	Remarks
1	1.00	6.3	X8L	4.7uF	±10%	CL10E475KQ96PN#	Derating B
2	1.00	6.3	X8M	4.7uF	±10%	CL10M475KQ96PN#	Derating B
3	0.90	16	X8L	220nF	±10%	CL10E224KO8VPN#	
4	0.90	25	X8L	220nF	±10%	CL10E224KA84PN#	
5	0.90	50	X8L	1nF	±10%	CL10E102KB8WPN#	
6	0.90	50	X8L	10nF	±10%	CL10E103KB8WPN#	
7	0.90	50	X8L	100nF	±10%	CL10E104KB8VPN#	Derating B
8	0.90	50	X8L	220nF	±10%	CL10E224KB8VPN#	Derating B
9	1.00	50	X8L	1uF	±10%	CL10E105KB9VPN#	Derating B
10	0.90	100	X8L	100nF	±10%	CL10E104KC8VPN#	Derating B

Size Code (inch/mm) : 0805/2012

No.	Thickness Max. (mm)	Rated Voltage (Vdc)	TCC	Capacitance	Capacitance Tolerance	Part Number	Remarks
1	1.50	16	X8M	10uF	±10%	CL21M106KOBVPN#	Derating B
2	1.35	25	X8L	470nF	±10%	CL21E474KAF4PN#	
3	1.50	35	X8L	2.2uF	±10%	CL21E225KLBVPN#	Derating B
4	1.50	35	X8L	4.7uF	±10%	CL21E475KLBVPN#	Derating B
5	1.40	50	X8L	220nF	±10%	CL21E224KBQVPN#	

Size Code (inch/mm) : 1206/3216

No.	Thickness Max. (mm)	Rated Voltage (Vdc)	TCC	Capacitance	Capacitance Tolerance	Part Number	Remarks
1	1.90	4	X8M	47uF	±20%	CL31M476MRKVPN#	Derating B
2	1.90	10	X8L	22uF	±10%	CL31E226KPKVPN#	Derating B
3	1.80	16	X8L	2.2uF	±10%	CL31E225KOHVPN#	
4	1.80	25	X8L	2.2uF	±10%	CL31E225KAH4PN#	
5	1.90	25	X8L	10uF	±10%	CL31E106KAKVPN#	Derating B
6	1.90	35	X8M	10uF	±10%	CL31M106KLKVPN#	Derating B
7	1.80	100	X8L	1uF	±10%	CL31E105KCHVPN#	Derating B
8	1.80	100	X8L	2.2uF	±10%	CL31E225KCHVPN#	Derating B

Size Code (inch/mm) : 1210/3225

No.	Thickness Max. (mm)	Rated Voltage (Vdc)	TCC	Capacitance	Capacitance Tolerance	Part Number	Remarks
1	2.80	25	X8L	22uF	±10%	CL32E226KAVVPN#	Derating B
2	2.20	50	X8L	4.7uF	±10%	CL32E475KBIVPN#	
3	2.80	50	X8L	10uF	±10%	CL32E106KBVVPO#	Derating B
4	2.70	100	X8L	2.2uF	±10%	CL32E225KCJVPN#	
5	2.20	100	X8L	4.7uF	±10%	CL32E475KCIVPN#	Derating B

※ ' Derating B : This MLCC should be applied with the derated voltage and temperature according to derating guide. Please refer to individual specifications.

ESD Protection Capacitors ESD

Features

- Compliance with the IEC 61000-4-2 standard for ESD immunity.
- Enhanced DC-Bias

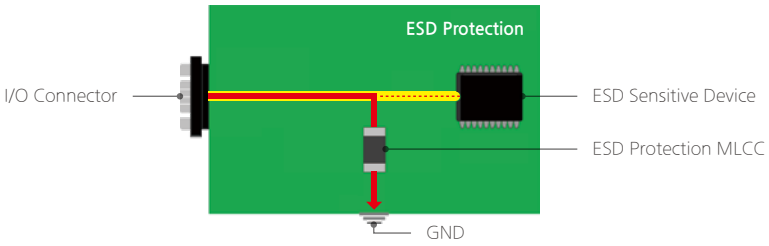

Applications

- Input and output sections in a wide range of automotive electronics.

Structure and Dimensions

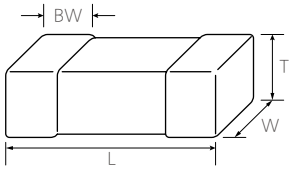

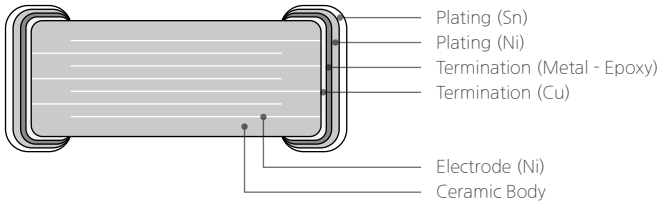

Size Code	Dimension (mm)				EIA (inch)
	L	W	T	BW	
10	1.70±0.10	0.90±0.10	0.90±0.10	0.30±0.20	0603

Capacitance Table

Category	TCC	Size Code (inch/mm)	Rated Voltage (Vdc)	Capacitance									Capacitance Range
				pF				nF			uF		
				0.1	1	10	100	1	10	100	1	10	100	
AEC-Q200 ESD Protection	X7R (125℃)	0603/1608	100											1nF - 10nF

Product LineUp (X7R)

Size Code (inch/mm) : 0603/1608

No.	Thickness Max. (mm)	Rated Voltage (Vdc)	TCC	Capacitance	Capacitance Tolerance	Part Number
1	1.00	100	X7R	1nF	±10%	CL10B102KC84PE#
2	1.00	100	X7R	1.5nF	±10%	CL10B152KC84PE#
3	1.00	100	X7R	2.2nF	±10%	CL10B222KC84PE#
4	1.00	100	X7R	3.3nF	±10%	CL10B332KC84PE#
5	1.00	100	X7R	4.7nF	±10%	CL10B472KC84PE#
6	1.00	100	X7R	6.8nF	±10%	CL10B682KC84PE#
7	1.00	100	X7R	10nF	±10%	CL10B103KC84PE#

Low ESL Capacitors

Low ESL

Features

- MLCCs with low equivalent series inductance (ESL) can be used in circuits with limited mounting area, as a small quantity of such MLCCs can sufficiently replace high-speed IC MLCCs.
- AEC-Q200 and JEDEC-020-D qualified products.

Applications

- ADAS, Infortainment, In-Vehicle Networking(IVN), Powertrain, Satety System

Structure and Dimensions

Reversed Type

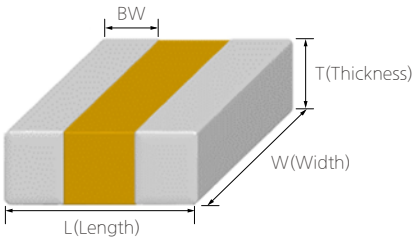

Size Code	Thickness Code	Dimension (mm)				EIA (inch)
		L	W	T	BW	
L5	2	0.65+0.05/-0.10	1.15+0.05/-0.10	0.20±0.02	0.20±0.06	0204
	4	0.58±0.10	1.10±0.10	0.43±0.10	0.20±0.06	

※ This code has only typical specifications. Please refer to individual specifications.

Capacitance Table

Category	TCC	Size Code (inch/mm)	Rated Voltage (Vdc)	Capacitance									Capacitance Range
				pF			nF			uF			
					1		10		100	1	10	100	
AEC-Q200 Reverse (Low ESL)	X7T (125℃)	0204/0510	2.5										1uF - 1uF
			4										1uF - 1uF

Product LineUp (X7T)

Size Code (inch/mm) : 0204/0510

No.	Thickness Max. (mm)	Rated Voltage (Vdc)	TCC	Capacitance	Capacitance Tolerance	Part Number
1	0.22	2.5	X7T	1uF	±20%	CLL5Z105MS21PN#
2	0.53	4	X7T	1uF	±20%	CLL5Z105MR41PN#

Application Guide

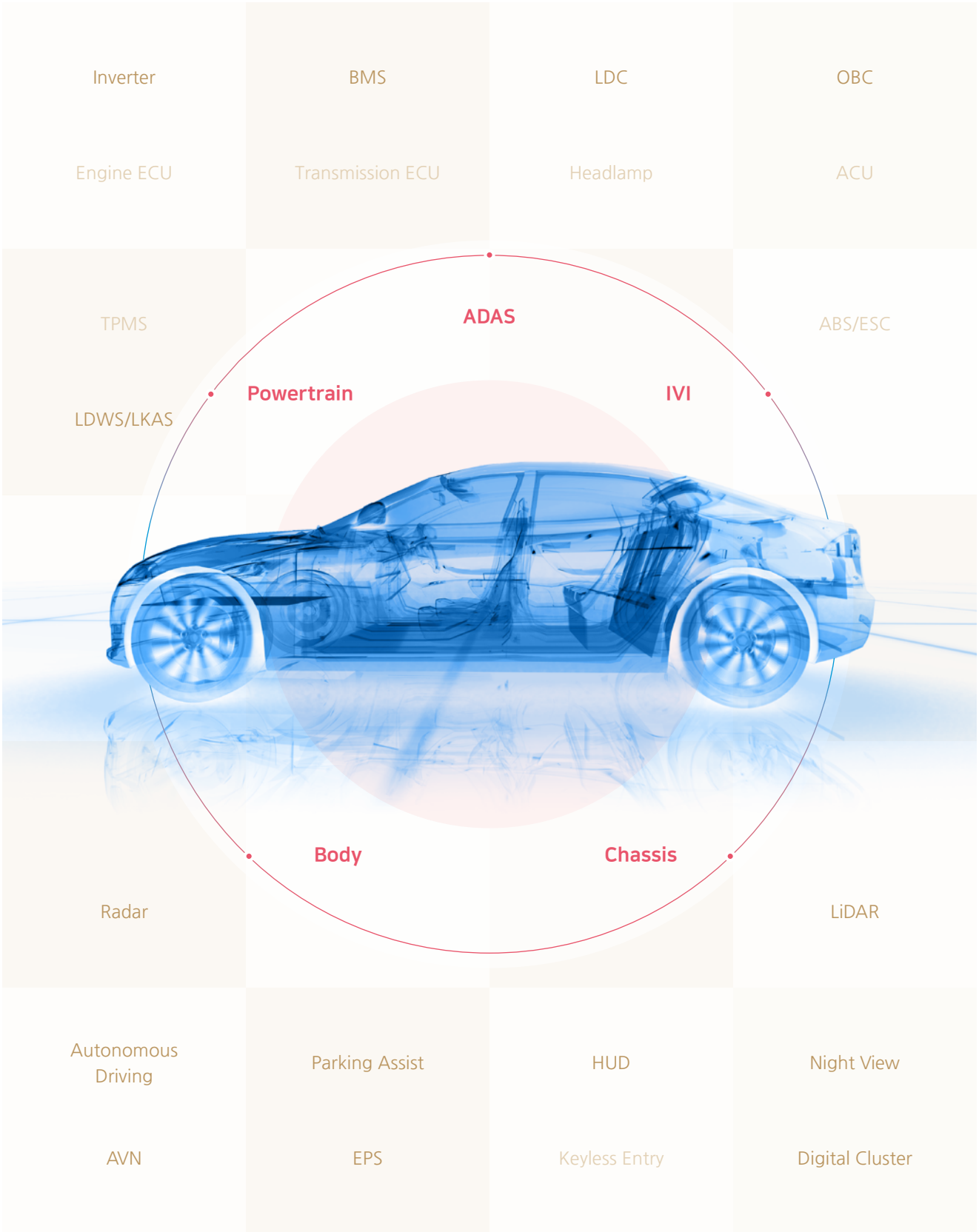

Application Guide

Powertrain Main Inverter

A Main Inverter provides energy to the vehicle's driving motor.
The main inverter directly uses a high voltage battery power through a DC-Link capacitor and performs improvement of the fuel economy of the vehicle by absorbing energy through a regenerative braking function.

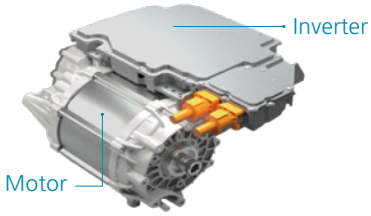

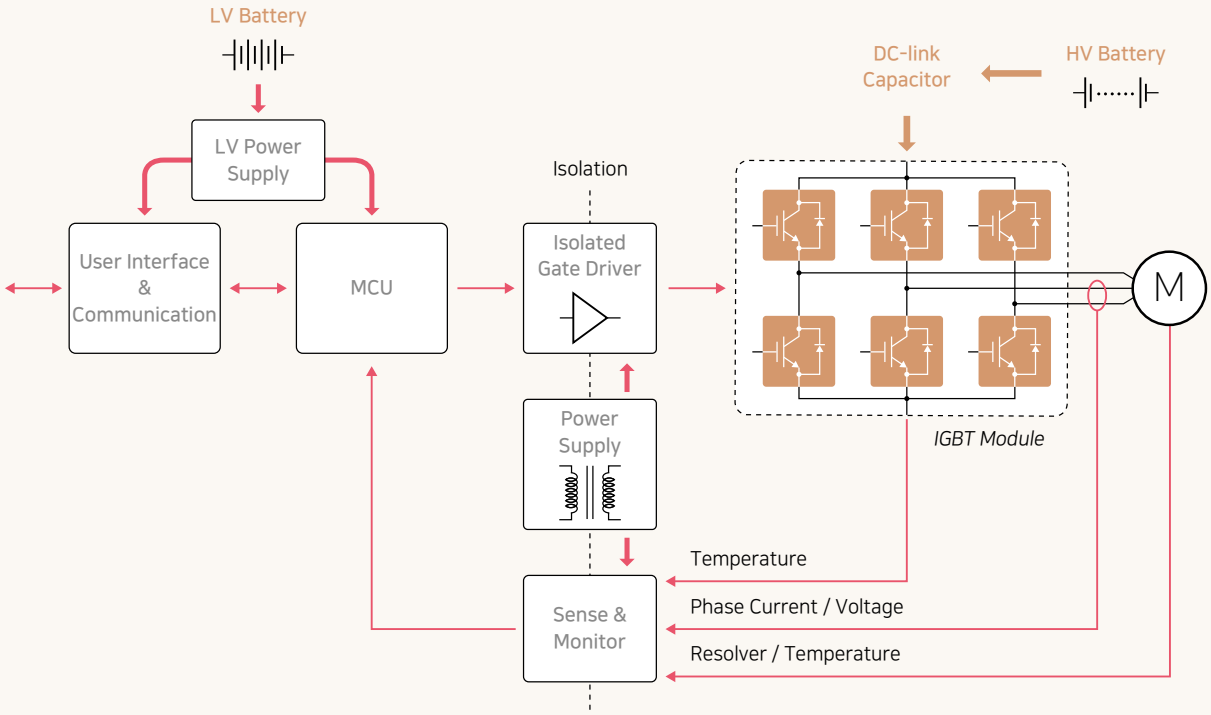

* Notice : Each company may have different circuit designs

Normal
(All Location)

- X7* Normal (Epoxy) — PN Series
- C0G Normal — PN Series

Mid/High Voltage
(250V, 630V, 1000V)

- X7*, C0G — PN Series

Crack Mitigation
(12V Battery Line, Near Hole & Connector)

- Soft Termination — *PJ Series
- Fail Safe/Soft Term. — XPJ Series

ESD Strengthen
(Connector I/F)

- ESD Strengthen — PE Series

Application Guide

Powertrain On Board Charger

An On-Board Charger (OBC) is a built-in system to charge a high voltage battery from AC power outside the car. OBC allows a vehicle for a standard charge at a charging station as well as at home.

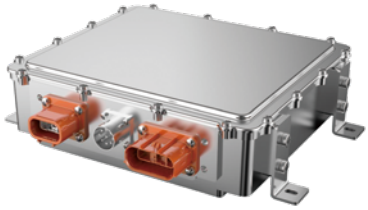

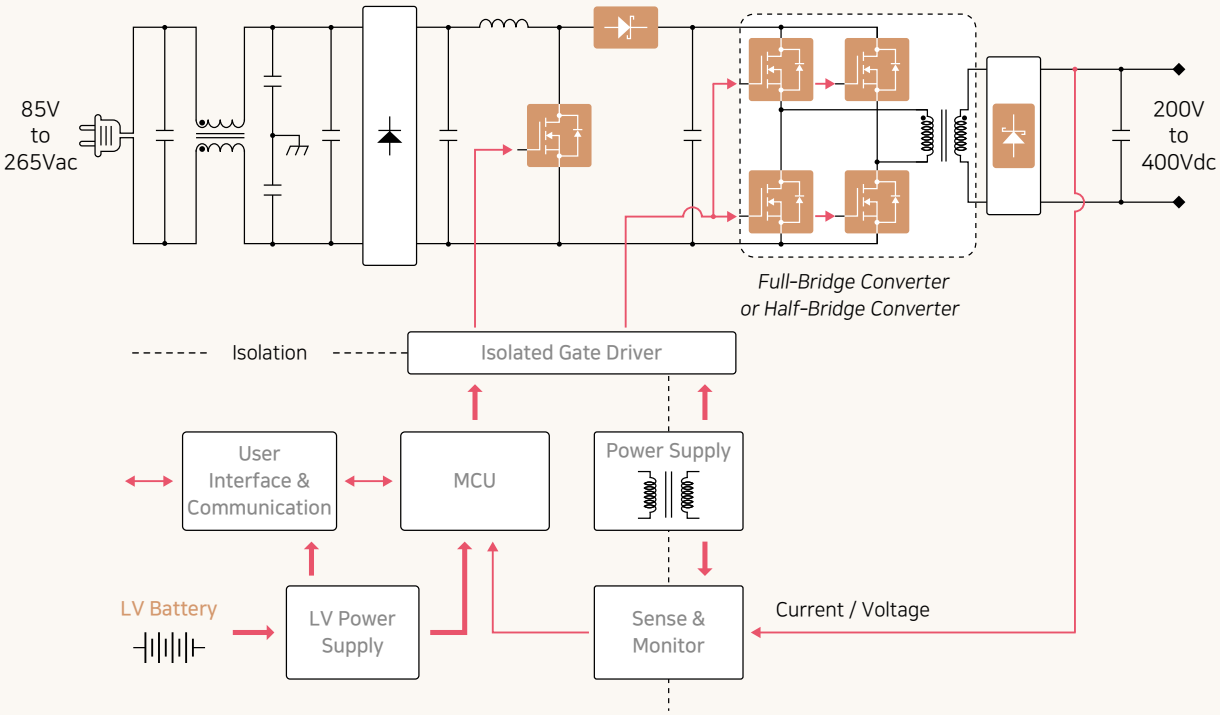

* Notice : Each company may have different circuit designs

Normal
(All Location)

X7* Normal (Epoxy)
PN Series



C0G Normal
PN Series



Mid/High Voltage
(250V, 630V, 1000V)

X7*, C0G
PN Series



Crack Mitigation
(12V Battery Line,
Near Hole & Connector)

Soft Termination
*PJ Series



Fail Safe/Soft Term.
XPJ Series



ESD Strengthen
(Connector I/F)

ESD Strengthen
PE Series



Application Guide

Powertrain Battery Management System

A Battery Management System (BMS) is the control system that manages a high voltage battery built with numerous cells, monitoring and controlling temperatures and voltage of the each cell.

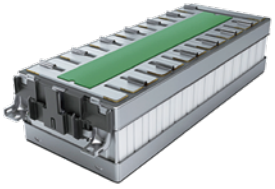

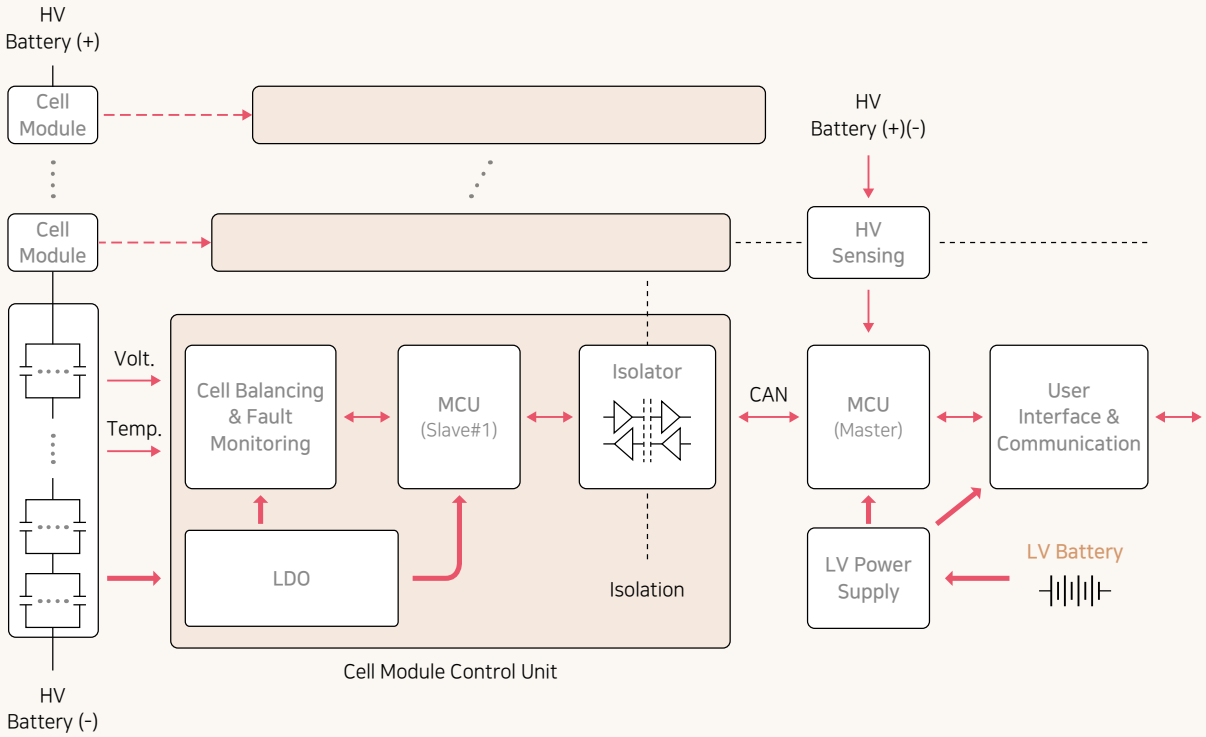

* Notice : Each company may have different circuit designs

Normal
(All Location)

X7* Normal (Epoxy)
PN Series



C0G Normal
PN Series



Mid/High Voltage
(250V, 630V, 1000V)

X7*, C0G
PN Series



Crack Mitigation
(12V Battery Line,
Near Hole & Connector)

Soft Termination
*PJ Series



Fail Safe/Soft Term.
XPJ Series



ESD Strengthen
(Connector I/F)

ESD Strengthen
PE Series



Application Guide

Powertrain DC-DC Converter (High Voltage to 12V)

A DC-DC Converter converts a high voltage battery into a 12V battery.
As there is no engine using fossil fuels, the DC-DC Converter plays a role in charging a 12V battery as an alternator used the engine to charge a 12V battery.



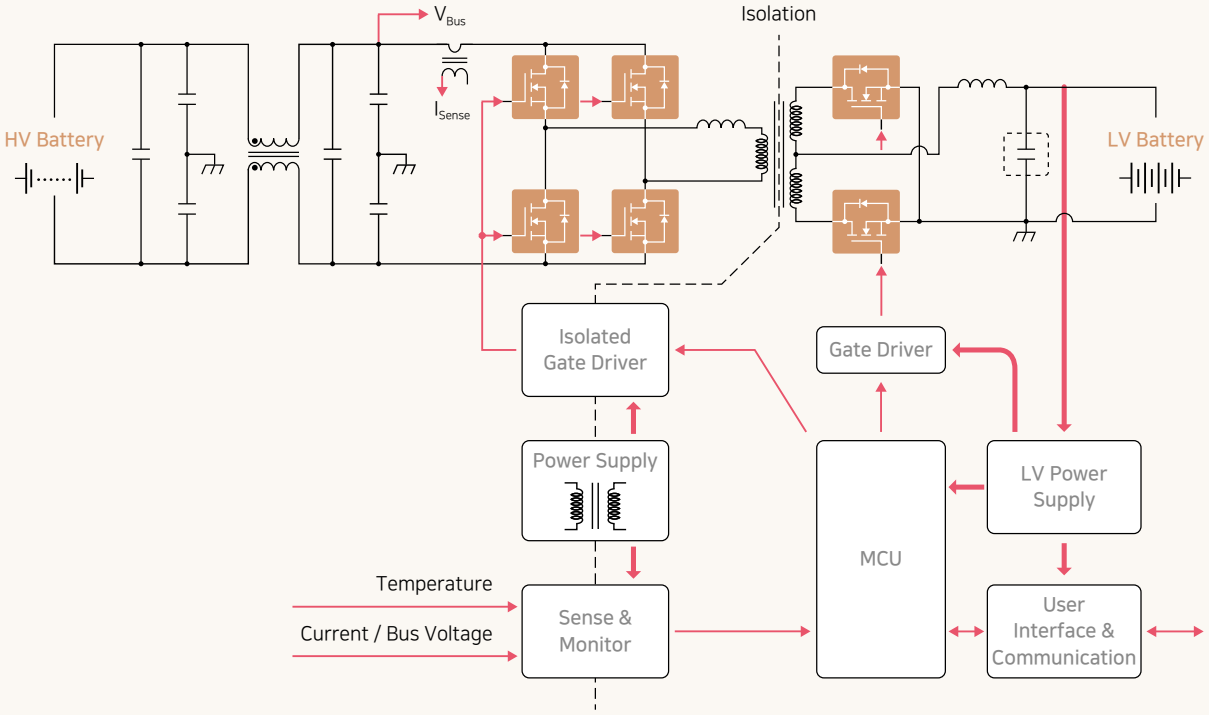

* Notice : Each company may have different circuit designs

Normal
(All Location)

X7* Normal (Epoxy)
PN Series



C0G Normal
PN Series



Mid/High Voltage
(250V, 630V, 1000V)

X7*, C0G
PN Series



Crack Mitigation
(12V Battery Line, Near Hole & Connector)

Soft Termination
*PJ Series



Fail Safe/Soft Term.
XPJ Series



ESD Strengthen
(Connector I/F)

ESD Strengthen
PE Series



Application Guide

Powertrain Engine Control Unit

An Engine Control Unit (ECU) is a type of electronic control unit that provides the power with a series of actuators on an engine.
It is becoming increasingly significant to reduce gas emission and improve fuel efficiency by the stricter global environmental regulation. Regarding the situation, ECU collects data from various sensors on an engine, controlling its components in the unit.

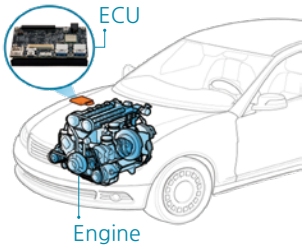

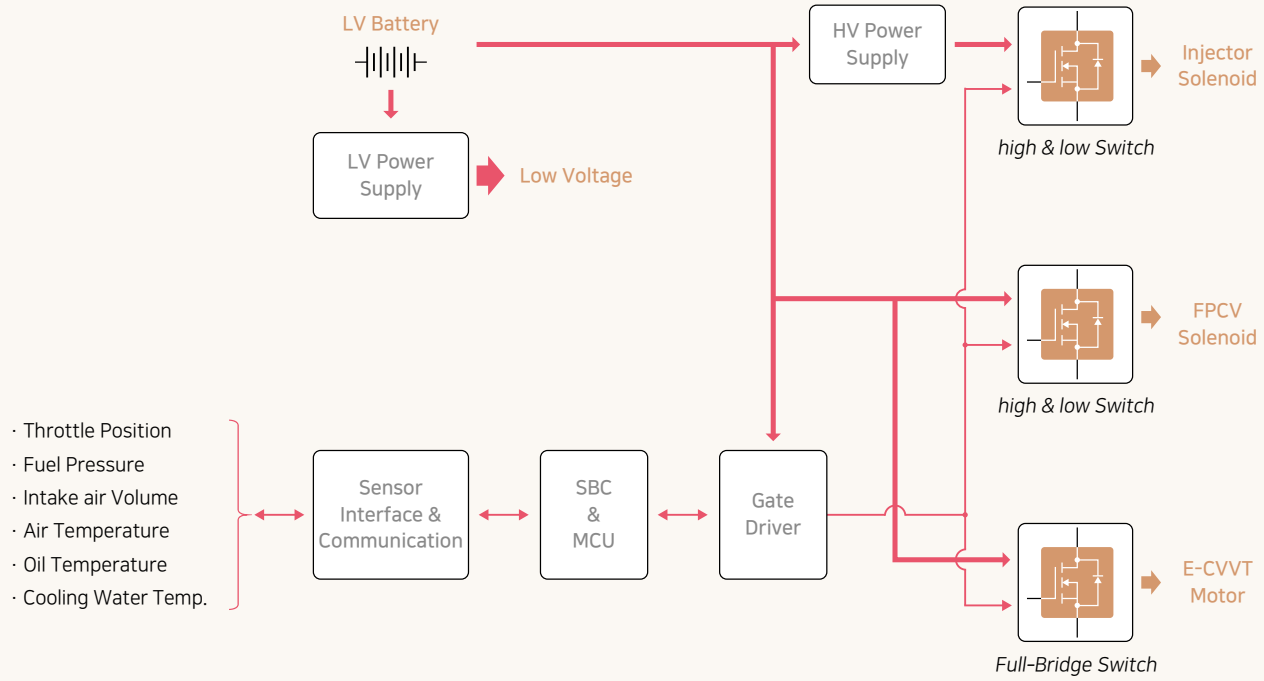

* Notice : Each company may have different circuit designs

Normal (All Location)	Crack Mitigation (12V Battery Line, Near Hole & Connector)	High Temperature (near Power Semiconductor)	ESD Strengthen (Connector I/F)
X7* Normal (Epoxy) PN Series	Soft Termination *PJ Series	X8* Normal PN Series	ESD Strengthen PE Series
C0G Normal PN Series	Fail Safe/Soft Term. XPJ Series		

Application Guide

Powertrain Transmission Control Unit

A transmission is an automatic device that transmits output torque from a crank shaft on an engine to wheels. TCU controls determines the ratio of a transmission, controlling its unit to transmit the ratio. As TCU is getting closer to the transmission to reduce price and weight for the transmission system, an operating temperature of TCU is getting increasing.

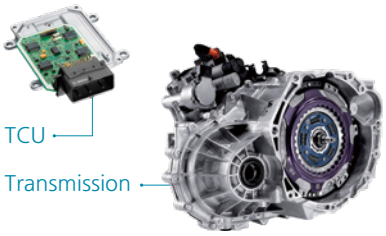

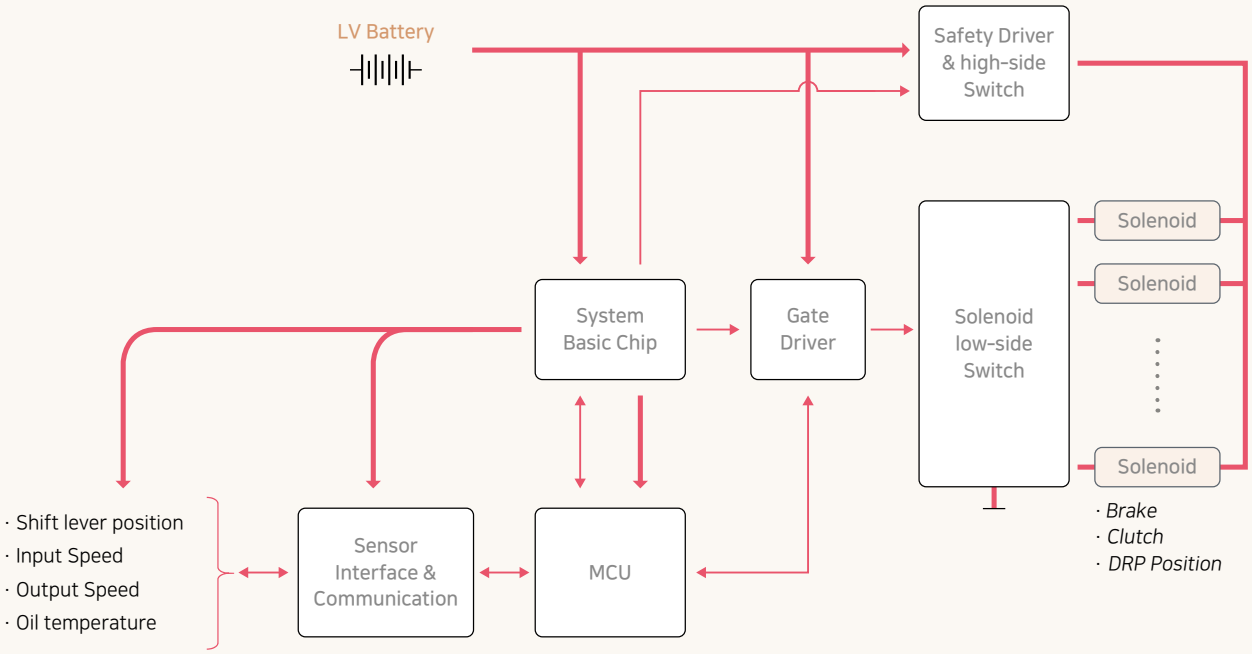

* Notice : Each company may have different circuit designs

Normal (All Location)	Crack Mitigation (12V Battery Line, Near Hole & Connector)	High Temperature (near Power Semiconductor)	ESD Strengthen (Connector I/F)
X7* Normal (Epoxy) PN Series	Soft Termination *PJ Series	X8* Normal PN Series	ESD Strengthen PE Series
C0G Normal PN Series	Fail Safe/Soft Term. XPJ Series		

Application Guide

Chassis Airbag Control Unit

An Airbag Control Unit (ACU) determines whether to run restraint systems according to the level of an accident being detected by an Airbag Control Unit. Acceleration sensor and speed sensor are embedded in an airbag system.



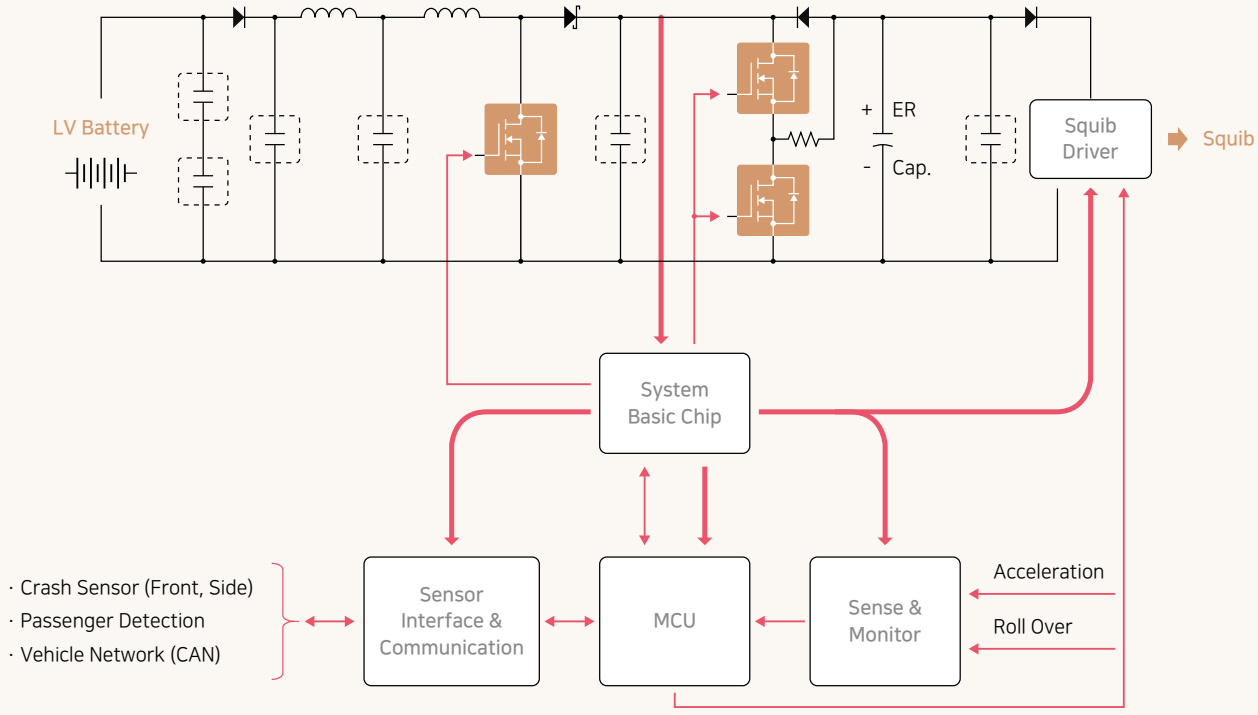

* Notice : Each company may have different circuit designs

Normal (All Location)	Crack Mitigation (12V Battery Line, Near Hole & Connector)	ESD Strengthen (Connector I/F)
X7* Normal (Epoxy) PN Series	Soft Termination *PJ Series	ESD Strengthen PE Series
C0G Normal PN Series	Fail Safe/Soft Term. XPJ Series	

Application Guide

Chassis Brake Actuation Unit

A Brake Actuation Unit is an integrated control system including functions of an integrated active hydraulic booster and Electronic Stability Control (ESC). BAU provides hydraulic pressure to brake calipers to control braking force on the vehicle.



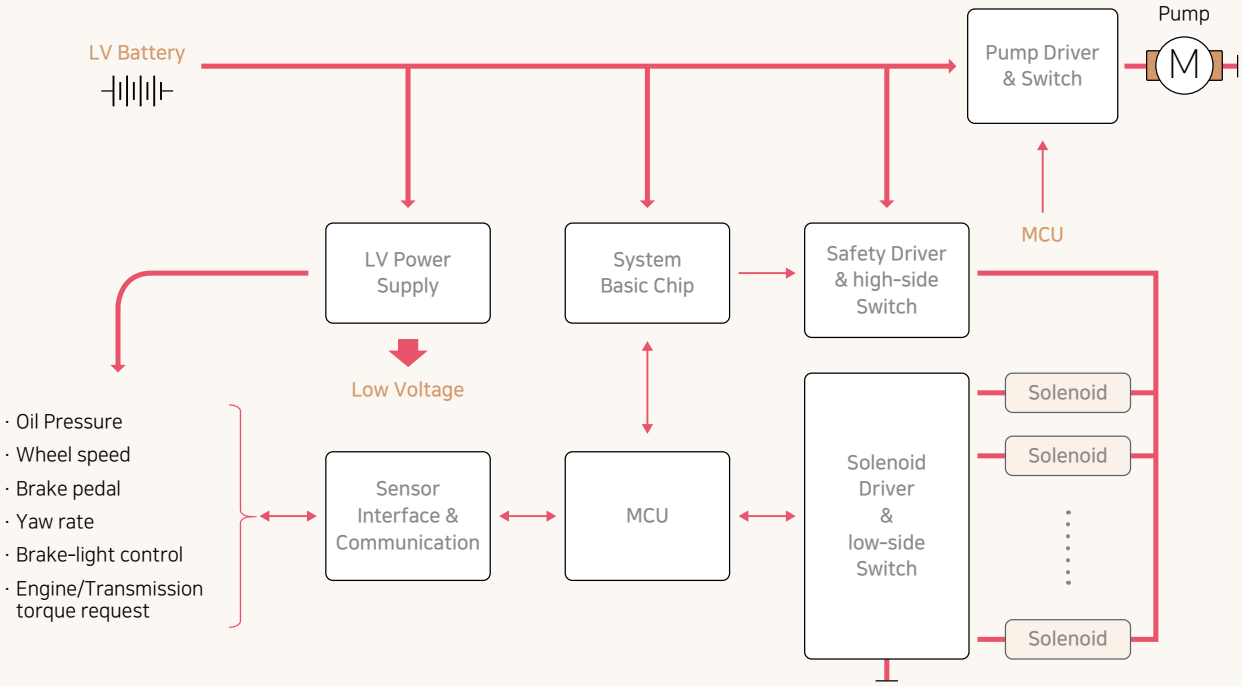

* Notice : Each company may have different circuit designs

Normal (All Location)	Crack Mitigation (12V Battery Line, Near Hole & Connector)	High Temperature (near Power Semiconductor)	ESD Strengthen (Connector I/F)
X7* Normal (Epoxy) PN Series	Soft Termination *PJ Series	X8* Normal PN Series	ESD Strengthen PE Series
C0G Normal PN Series	Fail Safe/Soft Term. XPJ Series		

Application Guide

Chassis Electric Power Steering

An Electric Power Steering (EPS) helps drivers turn a steering wheel of a vehicle via an electric motor. EPS gives an opportunity to augment the quality of driving to the driver, making it easier for the driver to put less efforts to turn the steering wheel.

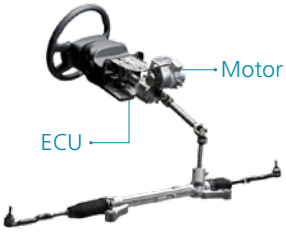

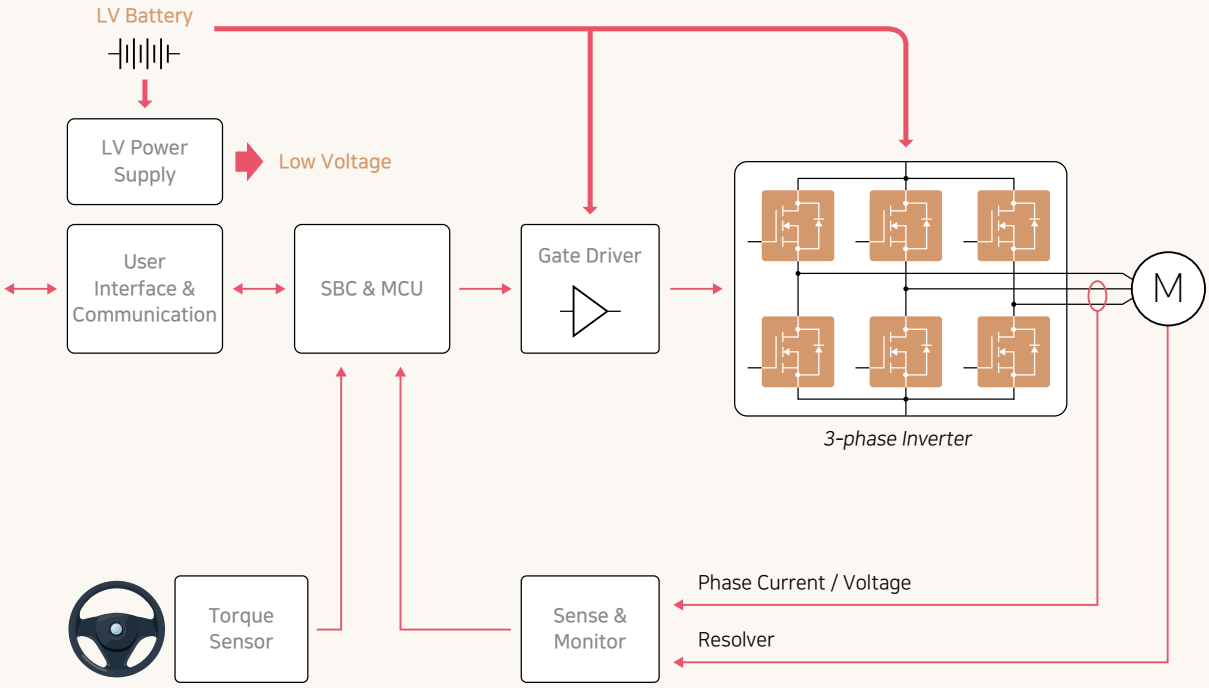

* Notice : Each company may have different circuit designs

Normal (All Location)	Crack Mitigation (12V Battery Line, Near Hole & Connector)	ESD Strengthen (Connector I/F)
X7* Normal (Epoxy) PN Series	Soft Termination *PJ Series	ESD Strengthen PE Series
C0G Normal PN Series	Fail Safe/Soft Term. XPJ Series	

Application Guide

Body LED Light Module with AFLS

A number of drivers favor a vehicle with head and rear ramps using LED that provides power efficiency, long lifespan and a various designs available. AFLS is an adaptive front lighting system to modulate the angles of the beam according to the driving direction of a vehicle.



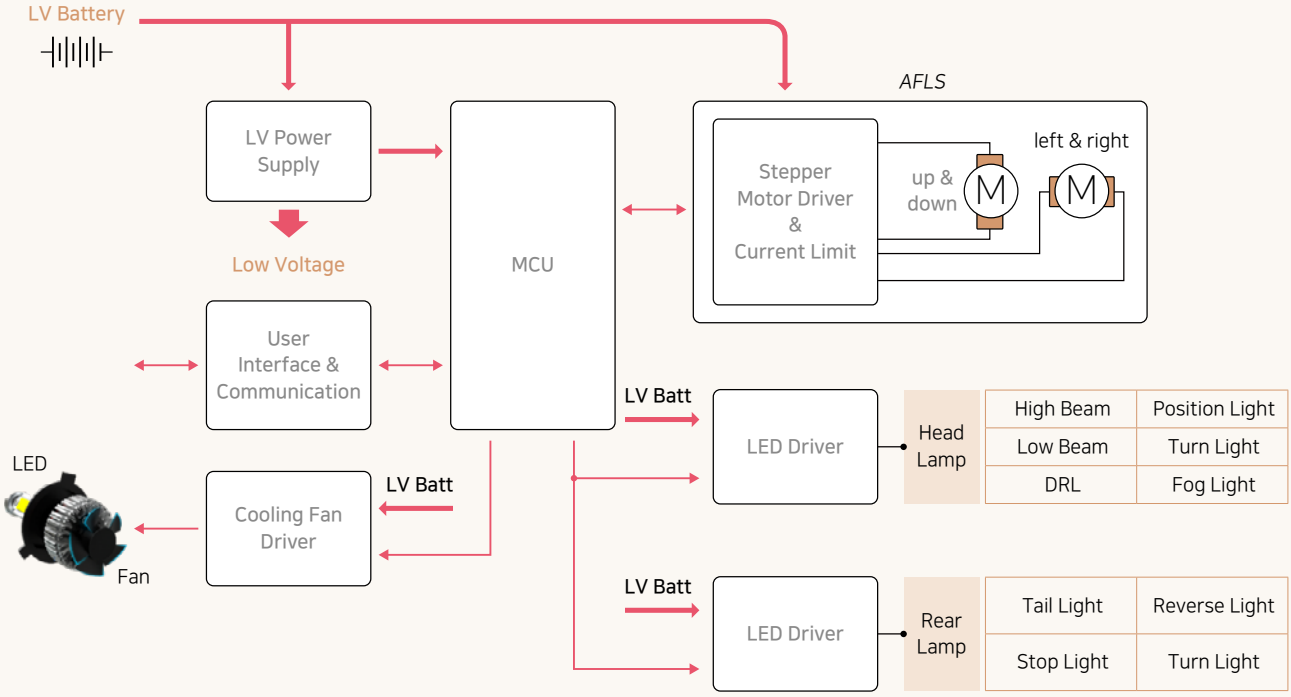

* Notice : Each company may have different circuit designs

Normal (All Location)	Crack Mitigation (12V Battery Line, Near Hole & Connector)	High Temperature (near Power Semiconductor)	ESD Strengthen (Connector I/F)
X7* Normal (Epoxy) PN Series	Soft Termination *PJ Series	X8* Normal PN Series	ESD Strengthen PE Series
C0G Normal PN Series	Fail Safe/Soft Term. XPJ Series		

Application Guide

Body Heating, Ventilation, Air Conditioning



A Heating & Ventilation, Air Conditioning (HVAC) system provides indoor environmental comfort of a vehicle: thermal comfort and high indoor air quality. For this, a heater, a fan and an air-conditioning compressor are operated after the HVAC system analyzes temperatures inside the vehicle. Actuators are used to control the direction of the fan and the air flow.

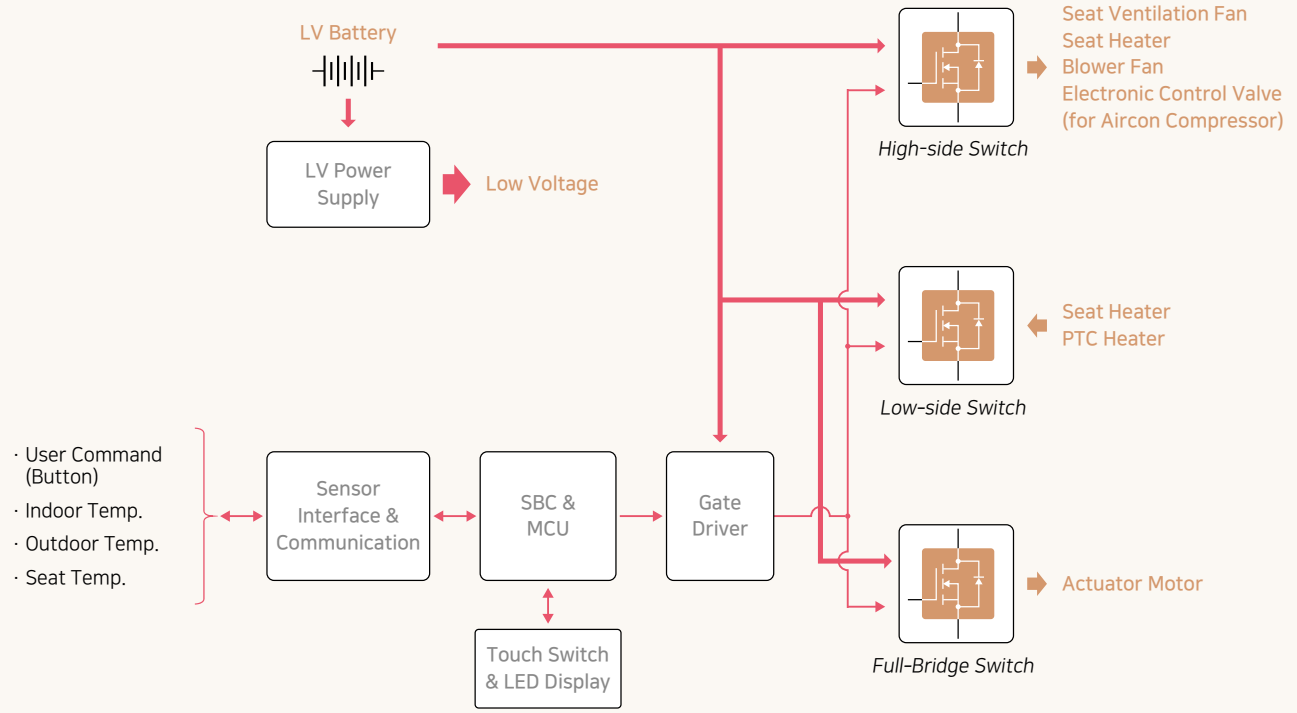

* Notice : Each company may have different circuit designs

Normal (All Location)	Crack Mitigation (12V Battery Line, Near Hole & Connector)	ESD Strengthen (Connector I/F)
X7* Normal (Epoxy) PN Series	Soft Termination *PJ Series	ESD Strengthen PE Series
C0G Normal PN Series	Fail Safe/Soft Term. XPJ Series	

Application Guide

Body Smart key Control System & TPMS

A Smart Key Control System offers automatic driver recognition, a door lock and unlock function and an engine starter function. Basic functions and optional functions are available depending on a type of vehicles.



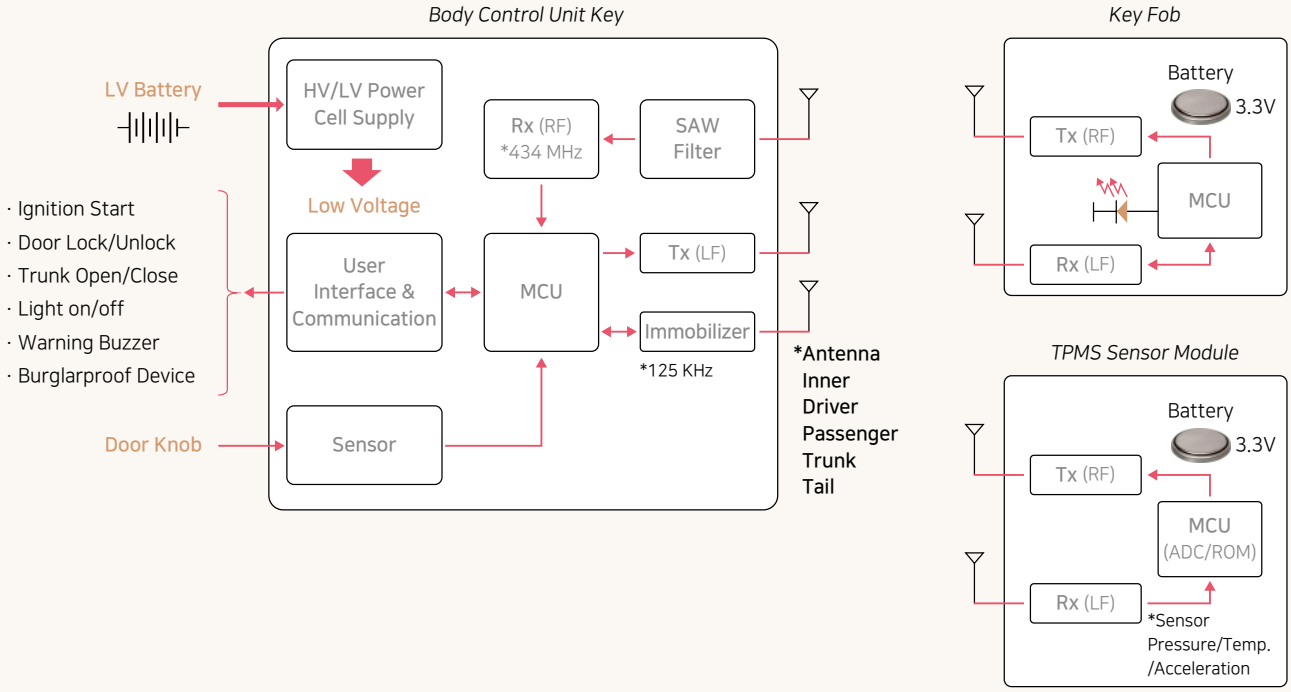

* Notice : Each company may have different circuit designs

Normal
(All Location)

X7* Normal (Epoxy)
PN Series



C0G Normal
PN Series



Crack Mitigation
(12V Battery Line, Near Hole & Connector)

Soft Termination
*PJ Series



Fail Safe/Soft Term.
XPJ Series



ESD Strengthen
(Connector I/F)

ESD Strengthen
PE Series



Application Guide

IVI Head Unit (for AVN)

A Head Unit is a main control system of AVN (Audio, Video, Navigation). It provides unified hardware interface for devices such as a camera, microphone and an antenna to turn on a video and a stereo system according to user command.



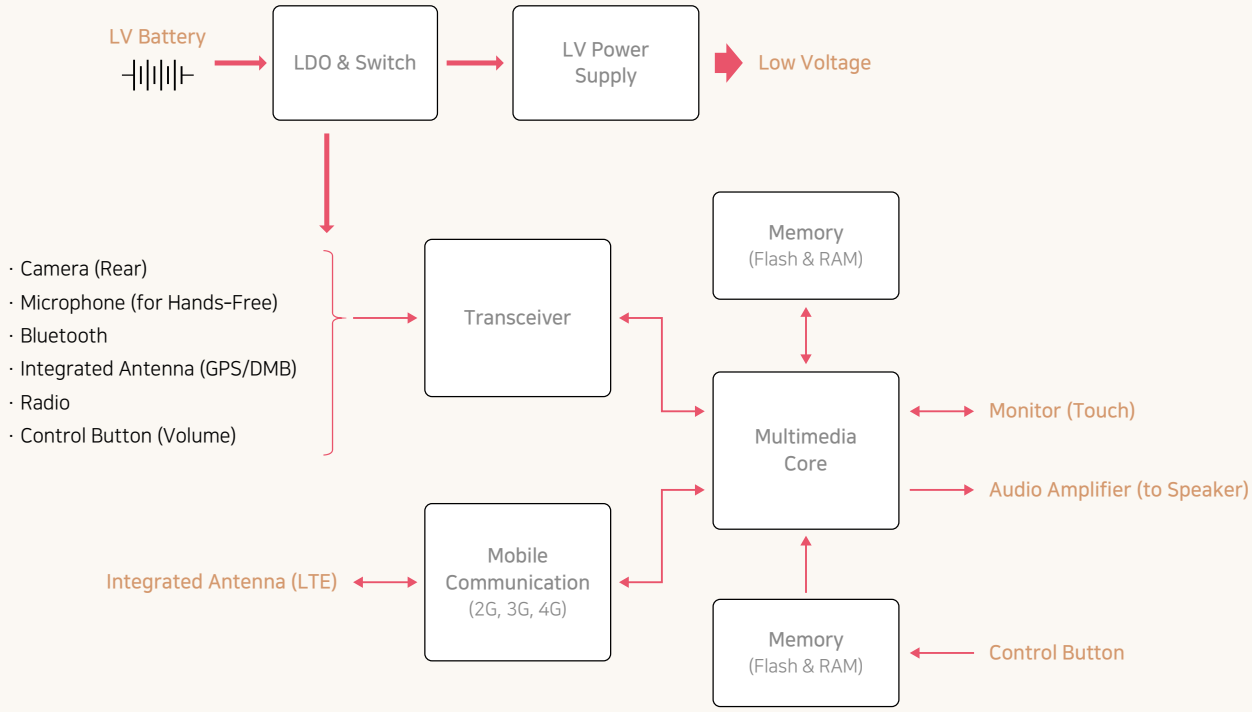

* Notice : Each company may have different circuit designs

Normal (All Location)	Crack Mitigation (12V Battery Line, Near Hole & Connector)	ESD Strengthen (Connector I/F)
X7* Normal (Epoxy) PN Series	Soft Termination *PJ Series	ESD Strengthen PE Series
C0G Normal PN Series	Fail Safe/Soft Term. XPJ Series	

Application Guide

IVI Telematics Control Unit

A Telematics Control Unit realizes a wireless network to provide an infotainment service such as route guidance using location information, traffic information, emergency recovery, the Internet, movies, games and so on, which is intended for drivers' safety and convenience.

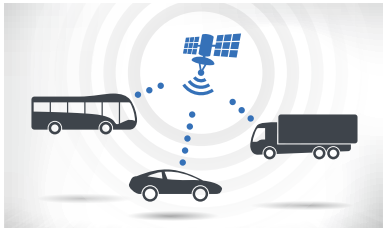

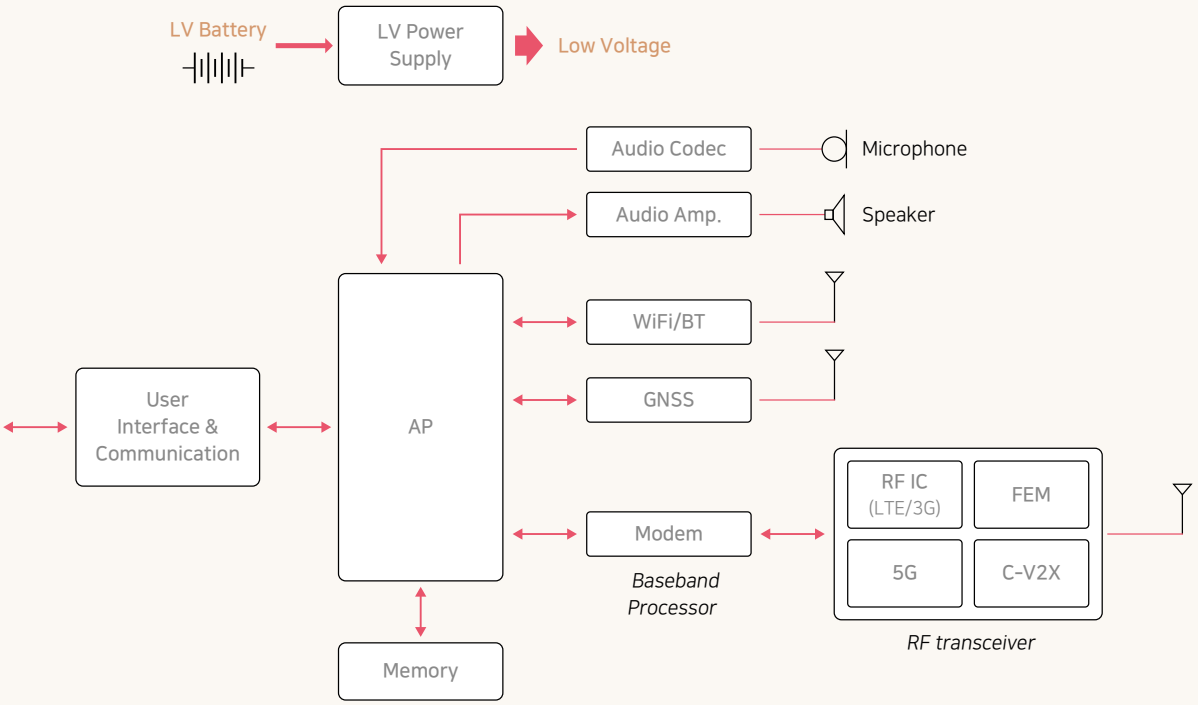

* Notice : Each company may have different circuit designs

Normal (All Location)	Crack Mitigation (12V Battery Line, Near Hole & Connector)	ESD Strengthen (Connector I/F)
X7* Normal (Epoxy) PN Series	Soft Termination *PJ Series	ESD Strengthen PE Series
C0G Normal PN Series	Fail Safe/Soft Term. XPJ Series	

Application Guide

IVI Head Up Display

A Head Up Display (HUD) is a transparent display that presents data on driving with an image on a wind shield or a combiner from drivers viewpoint.



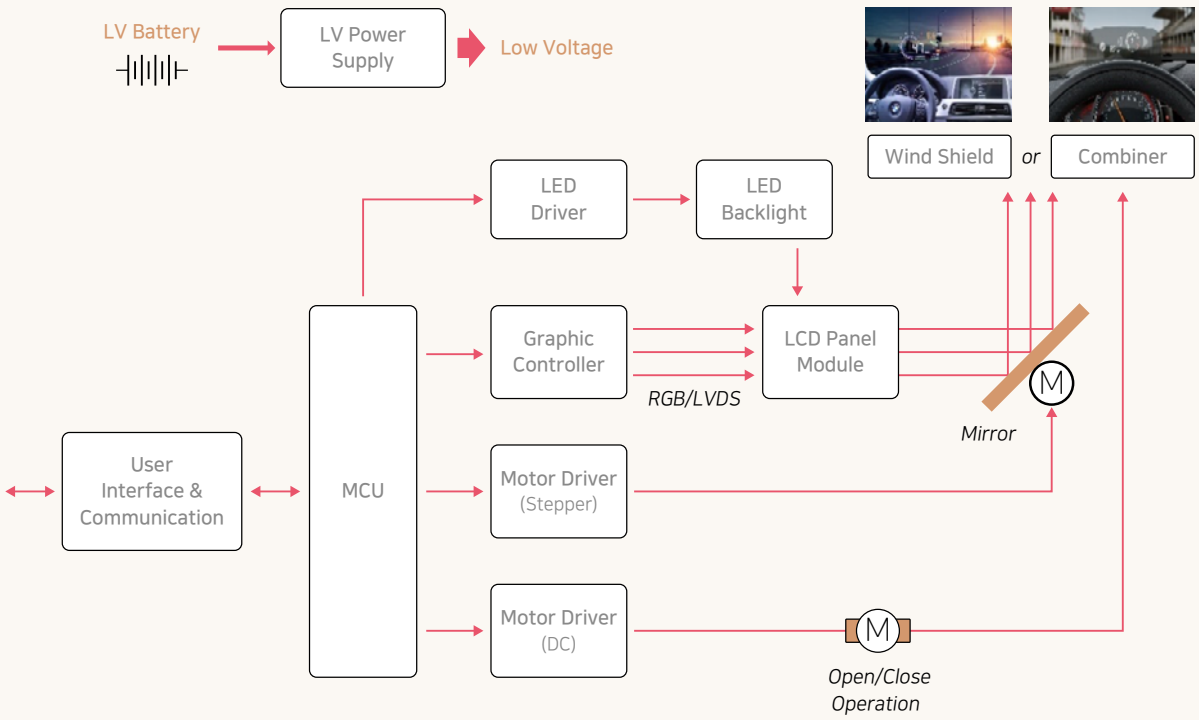

* Notice : Each company may have different circuit designs

Normal
(All Location)

X7* Normal (Epoxy)
PN Series



C0G Normal
PN Series



Crack Mitigation
(12V Battery Line, Near Hole & Connector)

Soft Termination
*PJ Series



Fail Safe/Soft Term.
XPJ Series



ESD Strengthen
(Connector I/F)

ESD Strengthen
PE Series



Application Guide

ADAS Smart Cruise Control (Radar)

Smart Cruise Control (SCC) is a driver-friendly system to automatically adjust a vehicle speed and to maintain a safe distance from vehicles ahead by radar.

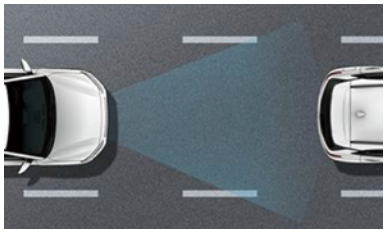

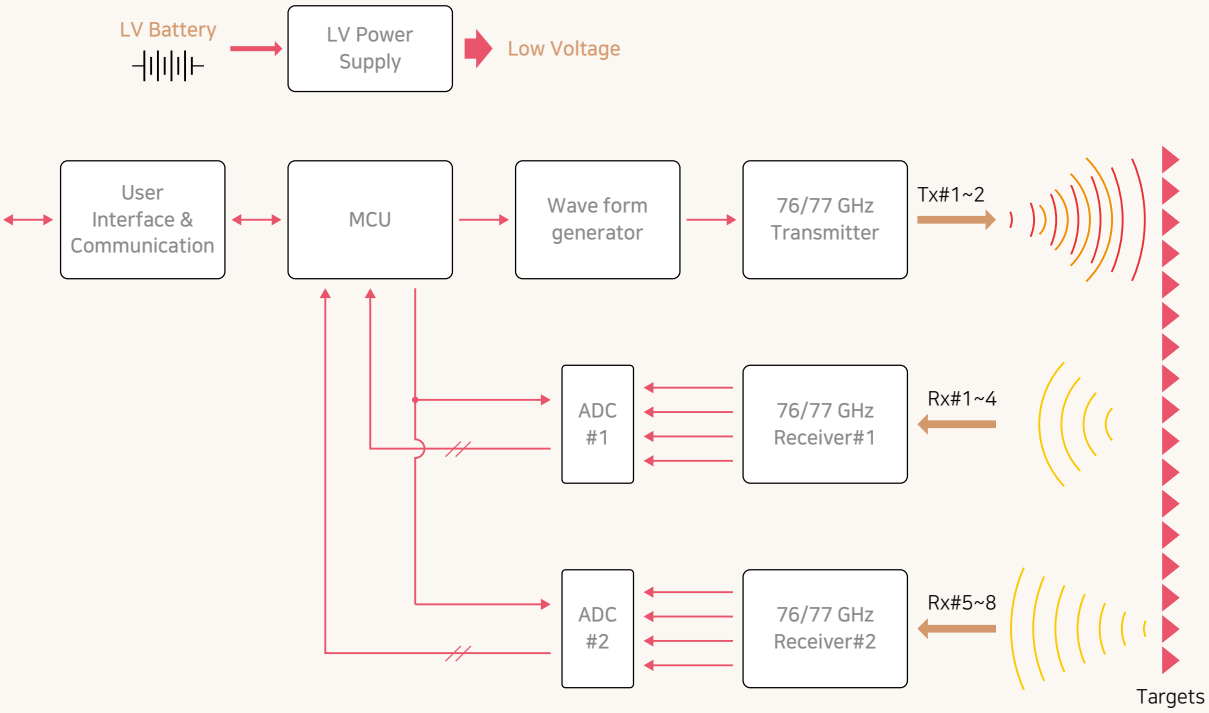

* Notice : Each company may have different circuit designs

Normal (All Location)	Crack Mitigation (12V Battery Line, Near Hole & Connector)	ESD Strengthen (Connector I/F)
X7* Normal (Epoxy) PN Series	Soft Termination *PJ Series	ESD Strengthen PE Series
C0G Normal PN Series	Fail Safe/Soft Term. XPJ Series	

Application Guide

ADAS Light Detection And Ranging

A LiDAR system creates 2D&3D images by measuring a distance with laser beam. LIDAR is considerable regarded as a significant technology to achieve complete autonomous driving.

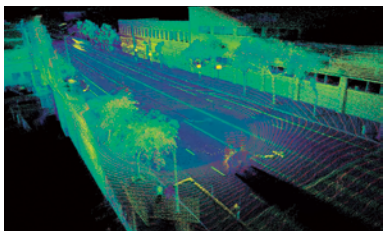

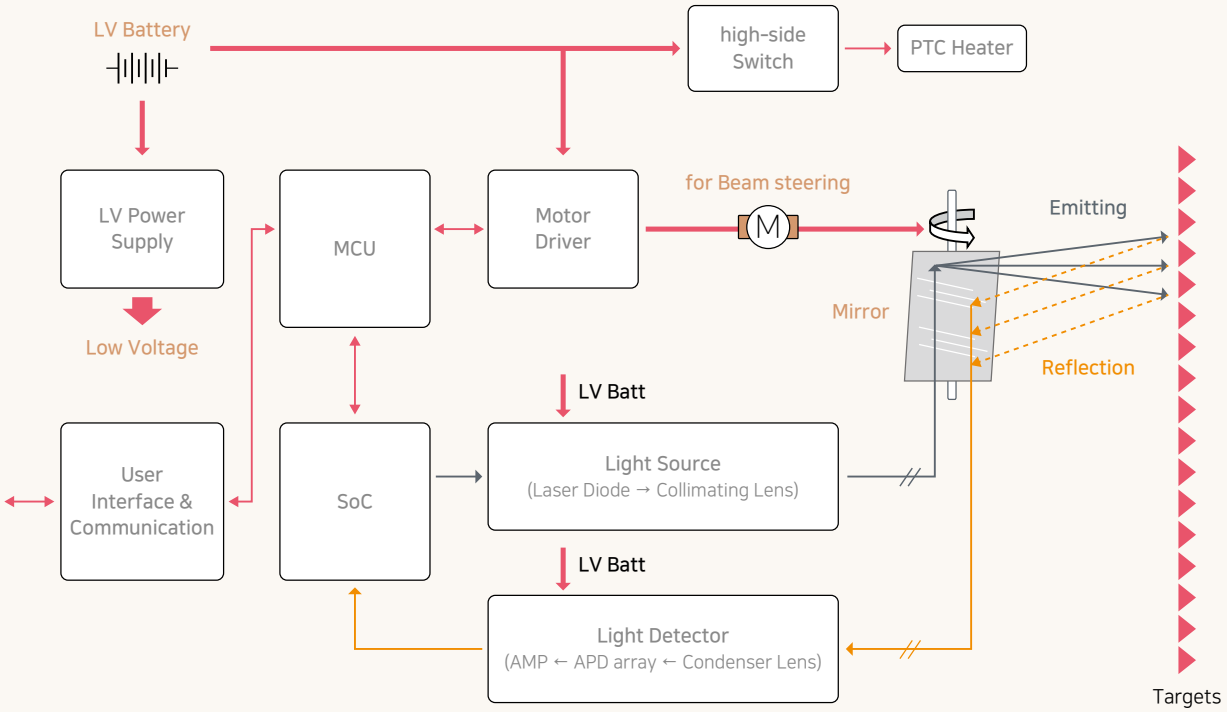

* Notice : Each company may have different circuit designs

Normal (All Location)	Crack Mitigation (12V Battery Line, Near Hole & Connector)	ESD Strengthen (Connector I/F)
X7* Normal (Epoxy) PN Series	Soft Termination *PJ Series	ESD Strengthen PE Series
C0G Normal PN Series	Fail Safe/Soft Term. XPJ Series	

Application Guide

ADAS Night Vision System



A Night Vision System is intended to take greater care of driver's view at night by proving reliable visual information. It enables drivers to increase their perception and seeing distance in darkness, which is beyond the reach of the vehicle's headlights. The Night Vision System uses an infrared camera using thermography or infrared reflective light for awareness of surroundings where human drivers hardly notice them in darkness.

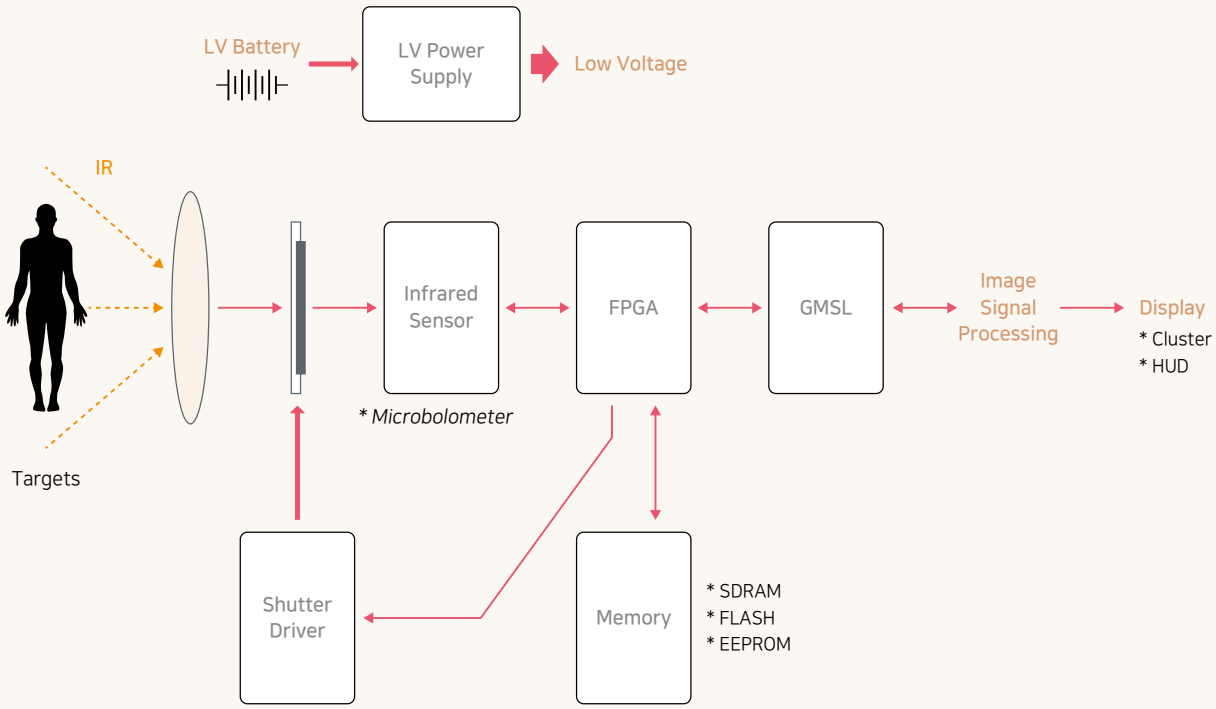

* Notice : Each company may have different circuit designs

Normal (All Location)	Crack Mitigation (12V Battery Line, Near Hole & Connector)	ESD Strengthen (Connector I/F)
X7* Normal (Epoxy) PN Series	Soft Termination *PJ Series	ESD Strengthen PE Series
C0G Normal PN Series	Fail Safe/Soft Term. XPJ Series	

Application Guide

ADAS Autonomous Control Unit



An autonomous vehicle is no longer to need driver's effort during driving safely, known as "Autonomous" or a "Driverless car", where the driver is able to leave all responsibility to operate systems. Autonomous unit analyzes big data on sensor, operating functions to search routes, control and drive the vehicle.

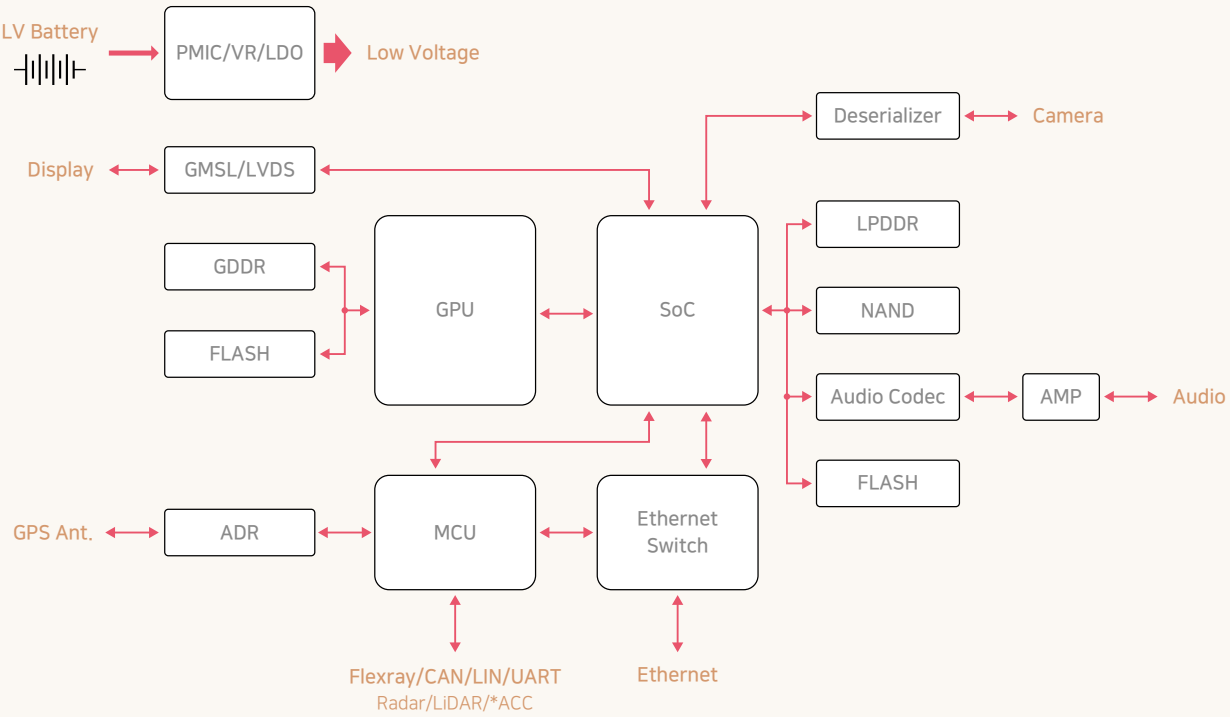

* Notice : Each company may have different circuit designs

Normal (All Location)	Crack Mitigation (12V Battery Line, Near Hole & Connector)	ESD Strengthen (Connector I/F)
X7* Normal (Epoxy) PN Series	Soft Termination *PJ Series	ESD Strengthen PE Series
C0G Normal PN Series	Fail Safe/Soft Term. XPJ Series	

Reliability Test Conditions

No.	Item			Performance	Test condition
1	Pre-and Post-Stress Electrical Test			-	
2	High Temper-ature Exposure	Appearance		No abnormal exterior appearance	Unpowered, 1000hrs@T = Max Temp. Initial Measurement Perform the heat treatment at 150℃ +0/-10℃ for 1 hour and leave the capacitor in ambient condition for 24±2 hours before measurement. Then perform the measurement. Final Measurement Leave the capacitor in ambient condition for 24±2 hours before measurement. Then perform the measurement.
		Capacitance Change	Class Ⅰ	Within±2.5% or ±0.25pF, (Whichever is larger)	
			Class Ⅱ	Within±10%	
		Q	Class Ⅰ	Capacitance ≥ 30pF : Q ≥ 1,000 < 30pF : Q ≥ 400 + 20 × C (C : Capacitance)	
		Tanδ	Class Ⅱ	Rated Voltage ≥ 250V : 0.050 max ≥ 25V : 0.030 max ≥ 16V : 0.050 max ≤ 10V : 0.075 max (X8L : 0.050 max) *1)	
		IR		Rated Voltage ≥ 250V : More than 10,000MΩ or 100MΩ × μF ≤ 200V : More than 10,000MΩ or 500MΩ × μF (Whichever is smaller) *1)	
3	Temper-ature Cycling	Appearance		No abnormal exterior appearance	1000Cycles Initial Measurement Perform the heat treatment at 150℃ +0/-10℃ for 1 hour and leave the capacitor in ambient condition for 24±2 hours before measurement. Then perform the measurement. Final Measurement Leave the capacitor in ambient condition for 24±2 hours before measurement. Then perform the measurement.
		Capacitance Change	Class Ⅰ	Within±2.5% or ±0.25pF, (Whichever is larger)	
			Class Ⅱ	Within±10%	
		Q	Class Ⅰ	Capacitance ≥ 30pF : Q ≥ 1,000 < 30pF : Q ≥ 400 + 20 × C (C : Capacitance)	
		Tanδ	Class Ⅱ	Rated Voltage ≥ 250V : 0.050 max ≥ 25V : 0.030 max ≥ 16V : 0.050 max ≤ 10V : 0.075 max (X8L : 0.050 max) *1)	
		IR		Rated Voltage ≥ 250V : More than 10,000MΩ or 100MΩ × μF ≤ 200V : More than 10,000MΩ or 500MΩ × μF (Whichever is smaller) *1)	
4	Destructive Physical Analysis			No defects or abnormalities	Per EIA 469
5	Biased Humidity	Appearance		No abnormal exterior appearance	1000hrs 85℃/85%RH, Rated voltage and 1.3 ~ 1.5V, (add 100kohm resistor) Initial Measurement Perform the heat treatment at 150℃ +0/-10℃ for 1 hour and leave the capacitor in ambient condition for 24±2 hours before measurement. Then perform the measurement. Final Measurement Perform the heat treatment at 150℃ +0/-10℃ for 1 hour and leave the capacitor in ambient condition for 24±2 hours before measurement. Then perform the measurement.
		Capacitance Change	Class Ⅰ	Within±2.5% or ±0.25pF, (Whichever is larger)	
			Class Ⅱ	Within±12.5%	
		Q	Class Ⅰ	Capacitance ≥ 30pF : Q ≥ 200 < 30pF : Q ≥ 100 + (10/3) × C (C : Capacitance)	
		Tanδ	Class Ⅱ	Rated Voltage ≥ 250V : 0.050 max ≥ 25V : 0.030 max ≥ 16V : 0.050 max ≤ 10V : 0.075 max *1) (*X8L - ≥ 35V : 0.035 max ≥ 10V : 0.050 max)	
		IR		Rated Voltage ≥ 250V : More than 10,000MΩ or 10MΩ × μF ≤ 200V : More than 500MΩ or 25MΩ × μF (*X8L/X8G : More than 1,000MΩ or 10MΩ × μF) (Whichever is smaller) *1)	
6	High Temper-ature Operating Life	Appearance		No abnormal exterior appearance	1000hrs @ TA = Max temp., Rated Voltage *2) Initial Measurement Perform the heat treatment at 150℃ +0/-10℃ for 1 hour and leave the capacitor in ambient condition for 24±2 hours before measurement. Then perform the measurement. Final Measurement Perform the heat treatment at 150℃ +0/-10℃ for 1 hour and leave the capacitor in ambient condition for 24±2 hours before measurement. Then perform the measurement.
		Capacitance Change	Class Ⅰ	Within±3.0% or ±0.3pF, (Whichever is larger)	
			Class Ⅱ	Within±12.5%	
		Q	Class Ⅰ	Capacitance ≥ 30pF : Q≥ 350 ≥ 10pF : Q≥ 275 + (5 / 2) × C < 10pF : Q≥ 200 + 10 × C (C : Capacitance)	
		Tanδ	Class Ⅱ	Rated Voltage ≥ 250V : 0.050 max ≥ 25V : 0.030 max ≥ 16V : 0.050 max ≤ 10V : 0.075 max *1) (*X8L - ≥ 35V : 0.035 max ≥ 10V : 0.050 max)	
		IR		Rated Voltage ≥ 250V : More than 10,000MΩ or 10MΩ × μF ≤ 200V : More than 1,000MΩ or 50MΩ × μF (Whichever is smaller) *1)	

Step	Temperature (℃)	Time (min.)
1	Min. operating Temp.+0/-3	30±3
2	25±2	1
3	Max. operating Temp.+3/-0	30±3
4	25±2	1

※ *1) : Indicates typical specification. Please refer to individual specifications.
*2) : Some of the parts are applicable in rated voltage × 150% or × 120%, Please refer to individual specifications.

Reliability Test Conditions

No.	Item			Performance	Test condition
7	External Visual			No abnormal exterior appearance	Microscope (×10)
8	Physical Dimensions			Within the specified dimensions	Using the calipers
9	Mechanical Shock	Appearance		No abnormal exterior appearance	Three shocks in each direction should be applied along 3 mutually perpendicular axes of the test specimen (18 shocks) Peak value: 1,500G / Duration: 0.5ms / Wave: Half sine / Velocity: 4.7m / sec Initial Measurement Perform the heat treatment at 150℃ +0/-10℃ for 1 hour and leave the capacitor in ambient condition for 24±2 hours before measurement. Then perform the measurement. Final Measurement Leave the capacitor in ambient condition for 24±2 hours before measurement. Then perform the measurement.
		Capacitance Change	Class Ⅰ	Within±2.5% or ±0.25pF, (Whichever is larger)	
			Class Ⅱ	Within±10%	
		Q	Class Ⅰ	Capacitance ≥ 30pF : Q ≥ 1,000 < 30pF : Q ≥ 400 + 20 × C (C : Capacitance)	
		Tanδ	Class Ⅱ	Rated Voltage ≥ 250V : 0.050 max ≥ 25V : 0.030 max ≥ 16V : 0.050 max ≤ 10V : 0.075 max (X8L : 0.035 max) *1)	
		IR		Rated Voltage ≥ 250V : More than 10,000MΩ or 100MΩ × μF ≤ 200V : More than 10,000MΩ or 500MΩ × μF (Whichever is smaller) *1)	
10	Vibration	Appearance		No abnormal exterior appearance	5g's for 20min., 12cycles each of 3 orientations, Use 8"× 5" PCB 0.031" Thick 7 secure points on one long side and 2 secure points at corners of opposite sides. Parts mounted within 2" from any secure point. Test from 10~2000Hz. Initial Measurement Perform the heat treatment at 150℃ +0/-10℃ for 1 hour and leave the capacitor in ambient condition for 24±2 hours before measurement. Then perform the measurement. Final Measurement Leave the capacitor in ambient condition for 24±2 hours before measurement. Then perform the measurement.
		Capacitance Change	Class Ⅰ	Within±2.5% or ±0.25pF, (Whichever is larger)	
			Class Ⅱ	Within±10%	
		Q	Class Ⅰ	Capacitance ≥ 30pF : Q ≥ 1,000 < 30pF : Q ≥ 400 + 20 × C (C : Capacitance)	
		Tanδ	Class Ⅱ	Rated Voltage ≥ 250V : 0.050 max ≥ 25V : 0.030 max ≥ 16V : 0.050 max ≤ 10V : 0.075 max (X8L : 0.035 max) *1)	
		IR		Rated Voltage ≥ 250V : More than 10,000MΩ or 100MΩ × μF ≤ 200V : More than 10,000MΩ or 500MΩ × μF (Whichever is smaller) *1)	
11	Resistance to Solder Heat	Appearance		No abnormal exterior appearance	Solder pot : 260±5℃, 10±1sec. Initial Measurement Perform the heat treatment at 150℃ +0/-10℃ for 1 hour and leave the capacitor in ambient condition for 24±2 hours before measurement. Then perform the measurement. Final Measurement Leave the capacitor in ambient condition for 24±2 hours before measurement. Then perform the measurement.
		Capacitance Change	Class Ⅰ	Within±2.5% or ±0.25pF, (Whichever is larger)	
			Class Ⅱ	Within±10%	
		Q	Class Ⅰ	Capacitance ≥ 30pF : Q ≥ 1,000 < 30pF : Q ≥ 400 + 20 × C (C : Capacitance)	
		Tanδ	Class Ⅱ	Rated Voltage ≥ 250V : 0.050 max ≥ 25V : 0.025 max ≥ 16V : 0.035 max ≤ 10V : 0.050 max (X8L : 0.035 max) *1)	
		IR		Rated Voltage ≥ 250V : More than 10,000MΩ or 100MΩ × μF ≤ 200V : More than 10,000MΩ or 500MΩ × μF (Whichever is smaller) *1)	
12	ESD	Appearance		No abnormal exterior appearance	AEC - Q200 - 002 Initial Measurement Perform the heat treatment at 150℃ +0 / -10℃ for 1 hour and leave the capacitor in ambient condition for 24±2 hours before measurement. Then perform the measurement. Final Measurement Perform the heat treatment at 150℃ +0 / -10℃ for 1 hour and leave the capacitor in ambient condition for 24±2 hours before measurement. Then perform the measurement.
		Capacitance Change	Class Ⅰ	Within±2.5% or ±0.25pF, (Whichever is larger)	
			Class Ⅱ	Within±10%	
		Q	Class Ⅰ	Capacitance ≥ 30pF : Q ≥ 1,000 < 30pF : Q ≥ 400 + 20 × C (C : Capacitance)	
		Tanδ	Class Ⅱ	Rated Voltage ≥ 250V : 0.050 max ≥ 25V : 0.025 max ≥ 16V : 0.035 max ≤ 10V : 0.050 max (X8L : 0.035 max) *1)	
		IR		Rated Voltage ≥ 250V : More than 10,000MΩ or 100MΩ × μF ≤ 200V : More than 10,000MΩ or 500MΩ × μF (Whichever is smaller) *1)	
13	Solderability			95% of the terminations is to be soldered evenly and continuously	a) Preheat at 155℃ for 4 hrs, Immerse in solder for 5s at 245±5℃ b) Steam aging for 8 hrs, Immerse in solder for 5s at 245±5℃ c) Steam aging for 8 hrs, Immerse in solder for 120s at 260±5℃ solder : a solution ethanol and rosin

※ *1) : Indicates typical specification. Please refer to individual specifications.

Reliability Test Conditions

<table>
<tr><th>No.</th><th colspan="3">Item</th><th>Performance</th><th>Test condition</th></tr>
<tr><td rowspan="9">14</td><td rowspan="9">Electrical Characteri-zation</td><td colspan="2">Capacitance</td><td>Within specified tolerance</td><td rowspan="9">The Capacitance / D.F. should be measured at 25℃.

<table><tr><th>Class</th><th>Capacitance</th><th>Frequency</th><th>Voltage</th></tr><tr><td rowspan="2">Ⅰ</td><td>≤1,000pF</td><td>1㎒±10%</td><td>0.5 ~ 5.0Vrms</td></tr><tr><td>>1,000pF</td><td rowspan="2">1㎑±10%</td><td rowspan="2">1.0±0.2Vrms</td></tr><tr><td rowspan="2">Ⅱ</td><td>≤10μF</td></tr><tr><td>>10μF</td><td>120Hz±20%</td><td>0.5±0.1Vrms</td></tr></table>
I.R. should be measured with a DC voltage not exceeding Rated Voltage @25℃, @125℃ for 60 ~ 120 sec.

Dielectric Strength : 250% of the rated voltage for 1 ~ 5 seconds
The charge / discharge current is less than 50mA.</td></tr>
<tr><td>Q</td><td>Class Ⅰ</td><td>Capacitance ≥ 30pF : Q ≥ 1,000
< 30pF : Q ≥ 400 + 20 × C
(C : Capacitance)</td></tr>
<tr><td>Tanδ</td><td>Class Ⅱ</td><td>Rated Voltage ≥ 25V : 0.025 max
≥ 16V : 0.035 max
≤ 10V : 0.050 max (X8L : 0.035 max) *1)</td></tr>
<tr><td rowspan="2">IR @25℃</td><td>Class Ⅰ</td><td>More than 100,000MΩ or 1,000MΩ × μF
(Whichever is smaller)</td></tr>
<tr><td>Class Ⅱ</td><td>More than 10,000MΩ or 500MΩ × μF
(Whichever is smaller)</td></tr>
<tr><td rowspan="2">IR @Max temp.</td><td>Class Ⅰ</td><td>More than 10,000MΩ or 100MΩ × μF
(Whichever is smaller)</td></tr>
<tr><td>Class Ⅱ</td><td>More than 1,000MΩ or 10MΩ × μF
(*X8L: More than 1,000MΩ or 10MΩ × μF)
(Whichever is smaller)</td></tr>
<tr><td colspan="2">Dielectric Strength</td><td>No dielectric breakdown or mechanica breakdown</td></tr>
<tr><td rowspan="4">15</td><td rowspan="4">Board Flex</td><td colspan="2">Appearance</td><td>No abnormal exterior appearance</td><td rowspan="4">Bending to the limit for 60 seconds.
Limit : Class Ⅰ - 3mm
Class Ⅱ - 3mm *1)
(Substrate for board flex test)

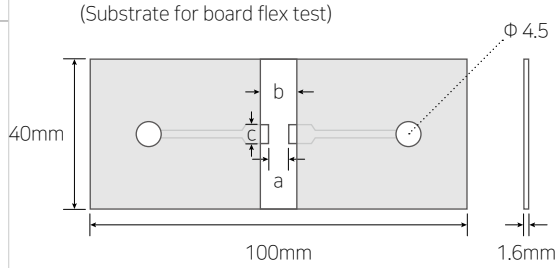

[unit : mm]
<table><tr><th>Code (inch)</th><th>Dimension (mm)</th><th>a</th><th>b</th><th>c</th></tr><tr><td>03 (0201)</td><td>0.6 × 0.3</td><td>0.3</td><td>0.9</td><td>0.3</td></tr><tr><td>05 (0402)</td><td>1.0 × 0.5</td><td>0.5</td><td>1.5</td><td>0.6</td></tr><tr><td>10 (0603)</td><td>1.6 × 0.8</td><td>0.6</td><td>2.2</td><td>0.9</td></tr><tr><td>21 (0805)</td><td>2.0 × 1.25</td><td>0.8</td><td>3.0</td><td>1.3</td></tr><tr><td>31 (1206)</td><td>3.2 × 1.6</td><td>2.0</td><td>4.4</td><td>1.7</td></tr><tr><td>32 (1210)</td><td>3.2 × 2.5</td><td>2.0</td><td>4.4</td><td>2.6</td></tr></table>
Material: Glass epoxy substrate
Thickness: T=1.6㎜, *03(0201), 05(0402) T=0.8㎜

Initial Measurement
Perform the heat treatment at 150℃ +0 / -10℃ for 1 hour and leave the capacitor in ambient condition for 24±2 hours before measurement. Then perform the measurement.

Final Measurement
Leave the capacitor in ambient condition for 24±2 hours before measurement. Then perform the measurement.</td></tr>
<tr><td rowspan="2">Capacitance Change</td><td>Class Ⅰ</td><td>Within±5.0% or ±0.5pF,
(Whichever is larger)</td></tr>
<tr><td>Class Ⅱ</td><td>Within±10%</td></tr>
<tr><td rowspan="4">16</td><td rowspan="4">Terminal Strength (SMD)</td><td colspan="2">Appearance</td><td>No abnormal exterior appearance</td><td rowspan="4">18N, for 60±1 sec.
* 0603(1608) _ 10N, 0402(1005), 0201(0603) _ 2N

Initial Measurement
Perform the heat treatment at 150℃ +0 / -10℃ for 1 hour and leave the capacitor in ambient condition for 24±2 hours before measurement. Then perform the measurement.

Final Measurement
Leave the capacitor in ambient condition for 24±2 hours before measurement. Then perform the measurement.</td></tr>
<tr><td rowspan="2">Capacitance Change</td><td>Class Ⅰ</td><td>Within±2.5% or ±0.25pF,
(Whichever is larger)</td></tr>
<tr><td>Class Ⅱ</td><td>Within±10%</td></tr>
</table>

※ *1) : Indicates typical specification. Please refer to individual specifications.

Reliability Test Conditions

<table>
<tr><th>No.</th><th colspan="3">Item</th><th>Performance</th><th>Test condition</th></tr>
<tr><td>17</td><td colspan="3">Beam Load</td><td>Destruction value should be exceed
Chip Length ≤ 2.5mm
a) Chip Thickness > 0.5mm : 20N
b) Chip Thickness = 0.5mm : 8N
c) Chip Thickness = 0.3mm : 5N

Chip Length ≥ 3.2mm
a) Chip Thickness ≥ 1.25mm : 54.5N
b) Chip Thickness < 1.25mm : 15N</td><td>Beam speed
Chip Length ≤ 2.5mm, 20N, 8N, 0.50±0.05mm / sec.
Chip Length ≤ 2.5mm, 5N, 0.10±0.01mm / sec.
Chip Length ≥ 3.5mm, 2.50±0.25mm / sec.</td></tr>
<tr><td rowspan="2">18</td><td rowspan="2">Capacitance Tempera-ture Character-istics</td><td rowspan="2">Capacitance Change</td><td>Class Ⅰ</td><td>0±30ppm / ℃</td><td rowspan="2">Capacitance shall be measured by the steps shown in the following table.

Step / Temperature (℃)
1 / 25±2
2 / Min. operating temp.±2
3 / 25±2
4 / Max. operating temp.±2
5 / 25±2

■ Class Ⅰ
Temperature Coefficient shall be calculated from the formula as below
Temp. Coefficient = (C2 - C1) / (C1×△T) ×10⁶[ppm /℃]
C_1 : Capacitance at step 3 C_2 : Capacitance at step 4
△T : Temp. at step 4 - Temp. at step 3

■ Class Ⅱ
Capacitance change shall be calculated from the formula as below
△C = (C_2 - C_1) / C_1 ×100 (%)
C_1 : Capacitance at step 3 C_2 : Capacitance at step 2 or step 4</td></tr>
<tr><td>Class Ⅱ</td><td>X*R : ±15%
X*S : ±22%
X*T : +22/-33%
X*L : +15/-40%
X*M : +15/-50%</td></tr>
</table>

※ *1) : Indicates typical specification. Please refer to individual specifications.
If you want more detaiedl imformation, Please Visit Samsung Electro - mechanics website (www.semlcr.com)

Packaging Specifications

Packaging

This specification applies to taping of MLCC.
When customers require, the specification may be changed under the agreement.

1 Figure

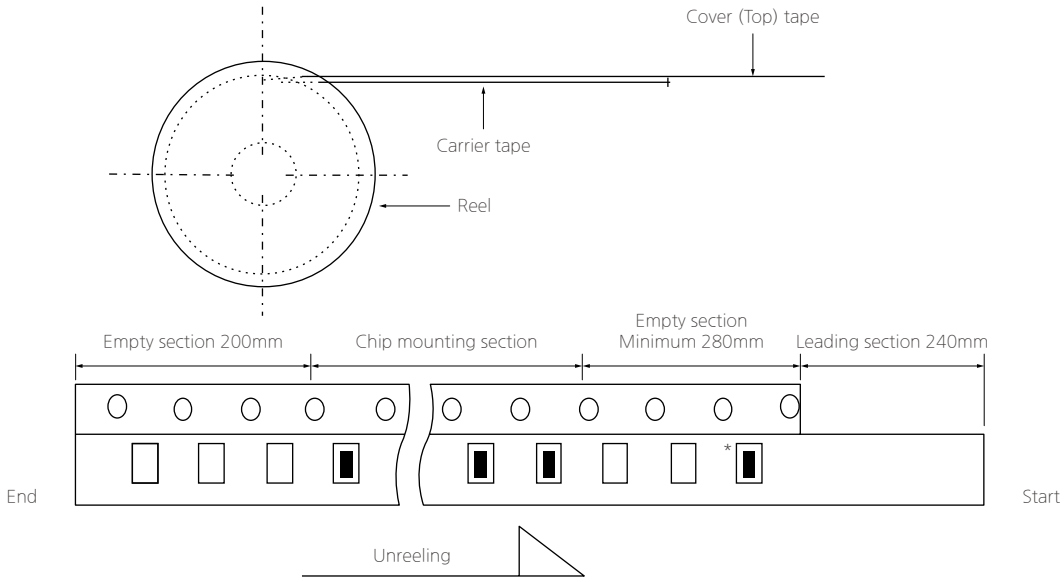

* The chip is only use for identifying the label and packaged products. Please don't use the chip.

2 Quantity

(Unit : pcs)

Type	Size Code (inch/mm)	Chip Thickness (mm)	Taping Type	Pitch (mm)	Plastic 7 inches reel	Plastic 10 inches reel	Plastic 13 inches reel
MLCC	0201/0603	0.3	PAPER	2	10K	-	50K
	0402/1005	0.5	PAPER	2	10K	-	50K
	0603/1608	0.8	PAPER	4	4K	10K	15K/10K
	0805/2012	T ≤ 0.85	PAPER	4	4K	10K	15K/10K
		T ≥ 1.0	EMBOSSED	4	2K	6K	10K
	1206/3216	T ≤ 0.85	PAPER	4	4K	10K	10K
		T ≥ 1.0	EMBOSSED	4	2K	4K	10K
	1210/3225	T ≤ 1.6	EMBOSSED	4	2K	4K	10K
		T ≥ 2.0	EMBOSSED	4	1K	4K	4K

Packaging Specifications

3 Tape Size

Ⅰ. Cardboard(Paper) tape : 4mm pitch

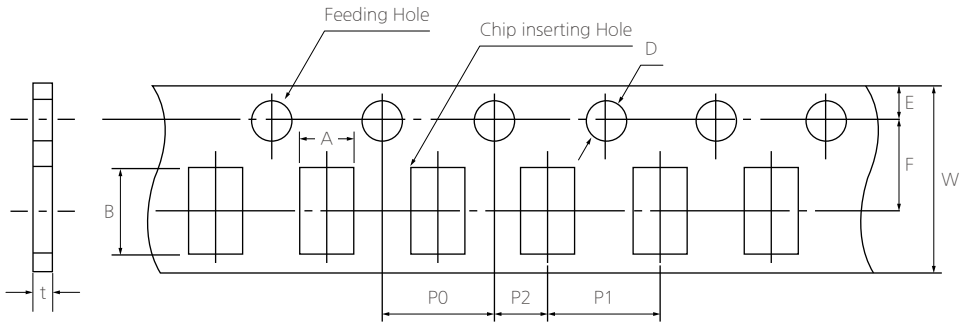

(Unit : mm)

Size Code (inch/mm)	A	B	W	F	E	P1	P2	P0	D	t
0603/ 1608	1.00 ±0.05	1.90 ±0.05	8.00 ±0.30	3.50 ±0.05	1.75 ±0.10	4.00 ±0.10	2.00 ±0.05	4.00 ±0.10	φ1.50 +0.10/-0	1.1 Below
0805/ 2012	1.60 ±0.20	2.40 ±0.20								
1206/ 3216	2.00 ±0.20	3.60 ±0.20								

※ The A, B in the table above are based on normal dimensions. The data may be changed with the special size tolerances.

Ⅱ. Cardboard(Paper) tape : 2mm pitch

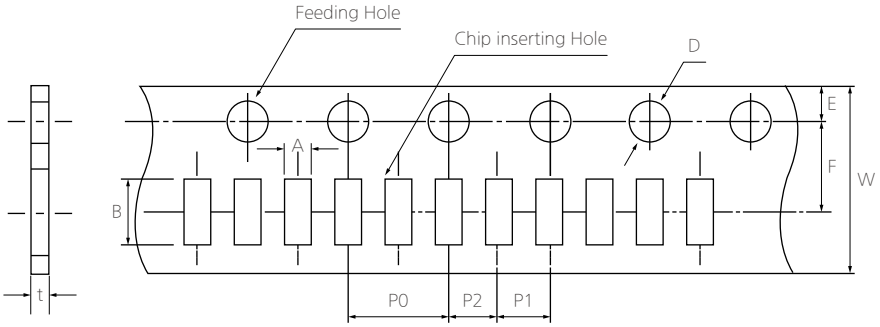

(Unit : mm)

Size Code (inch/mm)	A	B	W	F	E	P1	P2	P0	D	t
01005/ 0402	0.26 ±0.03	0.46 ±0.03	8.00 ±0.30	3.50 ±0.05	1.75 ±0.10	2.00 ±0.05	2.00 ±0.05	4.00 ±0.10	φ1.50 +0.1 /-0.03	0.25 ±0.02
0201/ 0603	0.38 ±0.03	0.68 ±0.03								0.35 ±0.03
0402/ 1005	0.62 ±0.05	1.12 ±0.05								0.60 ±0.05
0204/ 0510	0.62 0.05 /-0.10	1.12 0.05 /-0.10								0.37 ±0.03

※ The A, B in the table above are based on normal dimensions. The data may be changed with the special size tolerances.

Packaging Specifications

III. Embossed (Plastic) tape

(1) Embossed (Plastic) tape (P1: 4mm pitch)

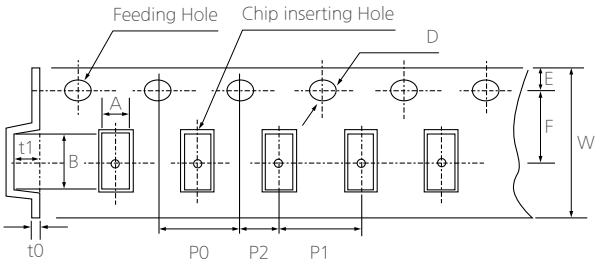

(2) Embossed (Plastic) tape (P1: 1mm/ 2mm pitch)

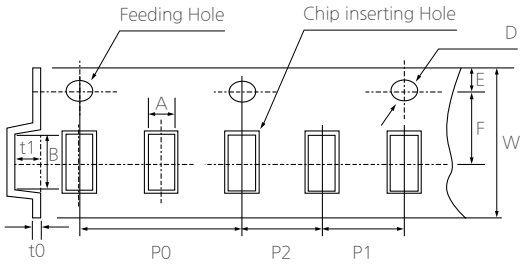

(Unit : mm)

Size (inch/mm)	A	B	W	F	E	P1	P2	P0	D	t1	t0
01005/ 0402	0.23 ±0.02	0.45 ±0.02	4.00 ±0.05	1.80 ±0.02	0.90 ±0.05	1.00 ±0.02	1.00 ±0.02	2.00 ±0.03	φ0.80 ±0.04	0.35 Below	0.50 Below
015008/ 05025	0.32 ±0.03	0.58 ±0.03	8.00 ±0.30	3.50 ±0.05	1.75 ±0.10	2.00 ±0.05	2.00 ±0.05	4.00 ±0.10	φ1.50 0.1/-0.03	2.92 Below	0.60 Below
0603/ 1608	1.05 ±0.15	1.90 ±0.15				4.00 ±0.10			φ1.50 0.1/-0		
0805/ 2012	1.45 ±0.20	2.30 ±0.20									
1206/ 3216	1.90 ±0.20	3.50 ±0.20									
1210/ 3225	2.90 ±0.20	3.70 ±0.20									

IV. Reel Size

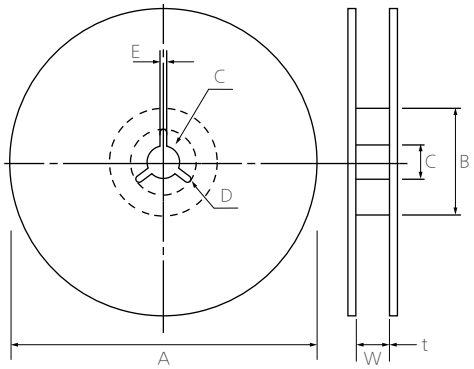

(Unit : mm)

Symbol	Tape Width	A	B	C	D	E	W	t
7"Reel	4mm	φ178±2.0	MINφ50	φ13±0.5	21±0.8	2.0±0.5	5±0.5	1.2±0.2
	8mm	φ178±2.0	MINφ50	φ13±0.5	21±0.8	2.0±0.5	10±1.5	0.9±0.2
	12mm	φ178±2.0	MINφ50	φ13±0.5	21±0.8	2.0±0.5	13±0.5	1.2±0.2
10"Reel	8mm	φ258±2.0	MINφ70	φ13±0.5	21±0.8	2.0±0.5	10±1.5	1.8±0.2
13"Reel	8mm	φ330±2.0	MINφ70	φ13±0.5	21±0.8	2.0±0.5	10±1.5	1.8±0.2
	12mm	φ330±2.0	MINφ70	φ13±0.5	21±0.8	2.0±0.5	13±0.5	2.2±0.2

Packaging Specifications

4 Cover tape peel-off force

Ⅰ. Peel-off force

10 g.f ≤ peel-off force ≤ 70 g.f

Ⅱ. Measurement Method

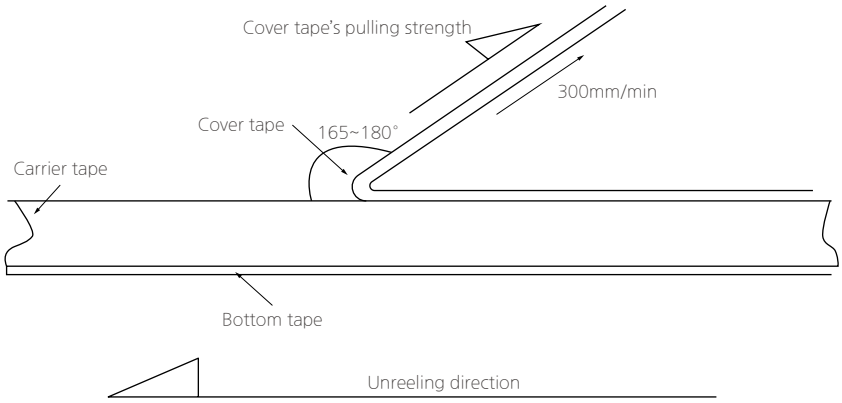

- Taping Packaging design : Packaging design follows IEC 60286-3 standard.
  (IEC 60286-3 Packaging of components for automatic handling - parts 3)

  * If the static electricity of SMT process causes any problems, please contact us.

5 BOX package

Ⅰ. Packaging Label

REEL & Box Type
Label includes the information as below.

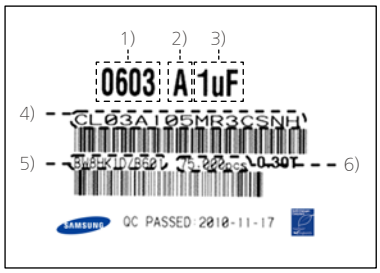

1) Chip size
2) Temperature Characteristics
3) Nominal Capacitance
4) Model Name
5) LOT Number & Reel Number
6) Q'ty

Ⅱ. Box Packaging

1) Double packaging with the paper type of inner box and outer box.
2) Avoid any damages during transportation by car, airplane and ship.
3) Remark information of contents on inner box and outer box

※ If special packaging is required, please contact us.

Packaging Specifications

III. 7" Box packaging

(Unit : mm)

■ Inner Box (7" × 5 REEL)

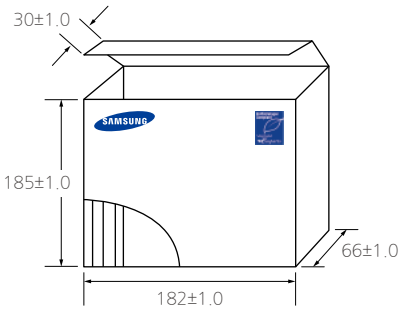

■ Inner Box (7" × 10 REEL)

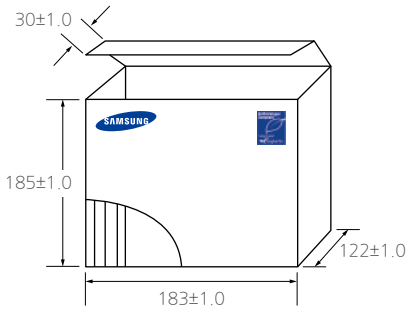

■ Outer Box (7" × 20 REEL)

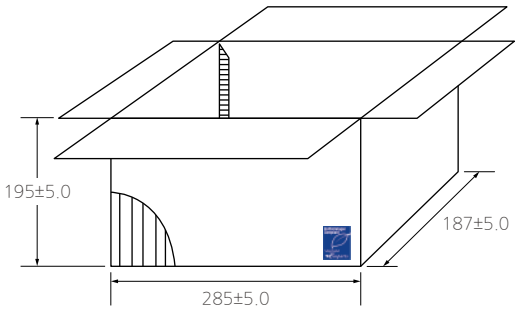

■ Outer Box (7" × 60 REEL)

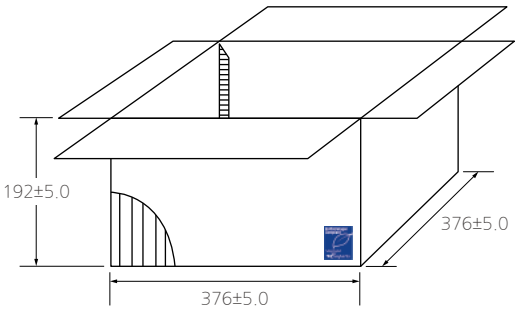

IV. 13" Box packaging

■ Inner Box (13" × 4 REEL)

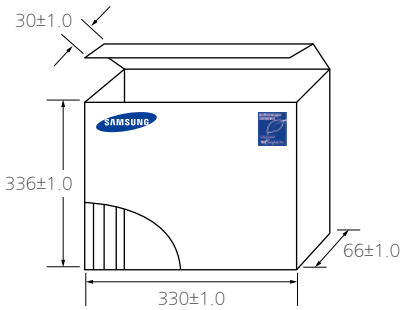

■ Outher Box (13" × 20 REEL)

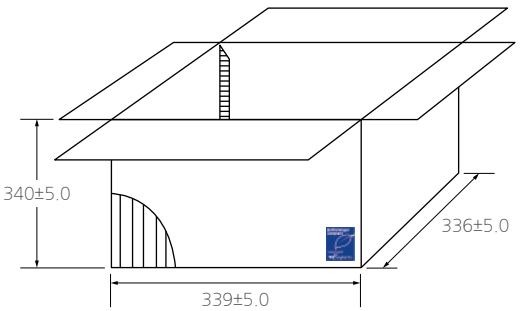

Caution/Notice

Product Characteristic data

1 Capacitance

The capacitance is the ratio of the change in an electric charge according to voltage change. Due to the fact that the capacitance may be subject to change with the measured voltage and frequency, it is highly recommended to measure the capacitance based on the following conditions.

Ⅰ. Measure capacitance with voltage and frequency specified in this document.
Regarding the voltage/frequency condition for capacitance measurement of each MLCC model, please make sure to follow a section “C. Reliability test Condition - Capacitance” in this document.

The following table shows the voltage and frequency condition according to the capacitance range.

[The voltage and frequency condition according to MLCC the capacitance range]

Class Ⅰ

Capacitance	Frequency	Voltage
≤1,000pF	1㎒±10%	0.5~5Vrms
>1,000pF	1㎑±10%	

Class Ⅱ

Capacitance	Frequency	Voltage
≤10μF	1㎑±10%	1.0±0.2Vrms
>10μF	120㎐±20%	0.5±0.1Vrms
Exception	1㎑±10%	0.5±0.1Vrms

※ Capacitance shall be measured after the heat treatment of 150+0/-10℃ for 1hr, leaving at room temperature for 24±2hr. (Class Ⅱ)

Ⅱ. It is recommended to use measurement equipment with the ALC (Auto Level Control) option.
The reason is that when capacitance or measurement frequency is high, the output voltage of measurement equipment can be lower than the setting voltage due to the equipment limitation. Note that when capacitance or measurement frequency is excessively high, the measurement equipment may show ALC off warning and provide a lower output voltage than the setting voltage even with ALC option selected. It is necessary to ensure the output voltage of measurement equipment is the same as the setting voltage before measuring capacitance.

Ⅲ. Capacitance value of high dielectric constant (Class Ⅱ) MLCC changes with applied AC and DC voltage. Therefore, it is necessary to take into account MLCC’s AC voltage characteristics and DC-bias voltage characteristics when applying MLCC to the actual circuit.

Ⅳ. The capacitance is in compliance with the EIA RS-198-1-F-2002.

2 Tan δ (DF)

Ⅰ. An ideal MLCC’s energy loss is zero, but real MLCC has dielectric loss and resistance loss of electrode. DF (Dissipation Factor) is defined as the ratio of loss energy to stored energy and typically being calculated as percentage.

Ⅱ. Quality factor (Q factor) is defined as the ratio of stored energy to loss energy. The equation can be described as 1/DF. Normally the loss characteristic of Class I MLCC is presented in Q, since the DF value is so small whereas the loss characteristic of Class Ⅱ MLCC is presented in DF.

Ⅲ. It is recommended to use Class Ⅰ MLCC for applications to require good linearity and low loss such as coupling circuit, filter circuit and time constant circuit.

Caution/Notice

3 Insulation Resistance

Ceramic dielectric has a low leakage current with DC voltage due to the high insulating properties.
Insulation resistance is defined as the ratio of a leakage current to DC voltage.

Ⅰ. When applying DC voltage to MLCC, a charging current and a leakage current flow together at the initial stage of measurement. While the charging current decreases, and insulation resistance (IR) in MLCC is saturated by time. Therefore, insulation resistance shall be measured 1 minute after applying the rated voltage.

4 Capacitance Aging

The aging characteristic is that the high dielectric (Class Ⅱ) MLCC decreases capacitance value over time. It is also necessary to consider the aging characteristic with voltage and temperature characteristics when Class II MLCC is used in circuitry.

Ⅰ. In general, aging causes capacitance to decrease linearly with the log of time as shown in the following graph. Please check with SEMCO for more details, since the value may vary between different models.

Ⅱ. After heat treatment (150 °C, 1hour), the capacitance decreased by aging is recovered, so aging should be considered again from the time of heat treatment.

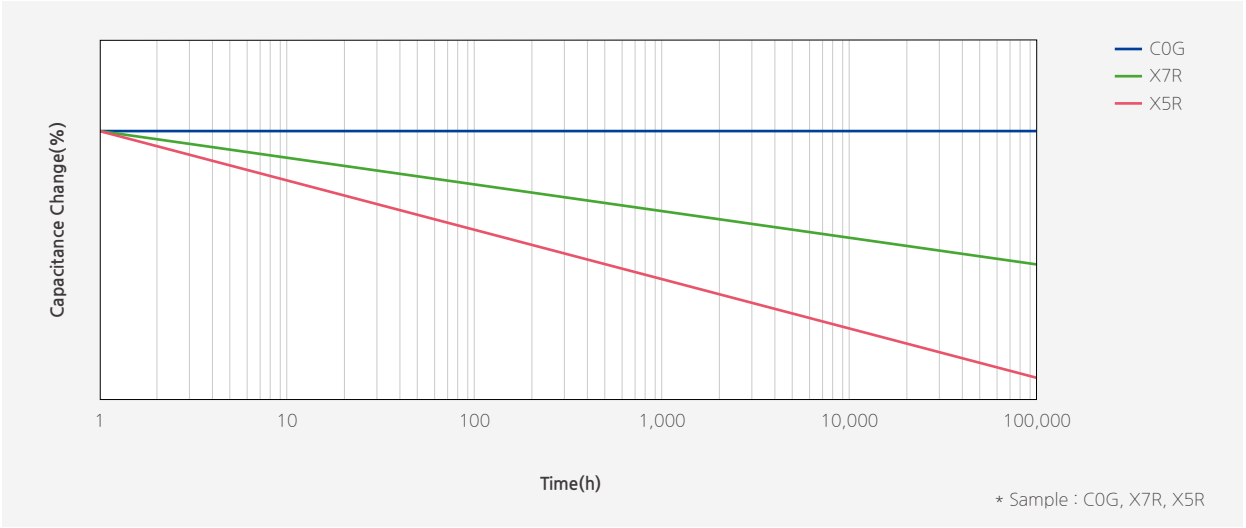

[Example of Capacitance Aging]

Caution/Notice

5 Temperature Characteristics of Capacitance (TCC)

Please consider temperature characteristics of capacitance since the electrical characteristics such as capacitance changes which is caused by a change in ceramic dielectric constant by temperature.

I . It is necessary to check the values specified in section "C. Reliability test Condition-Temperature Characteristics" for the temperature and capacitance change range of MLCC.

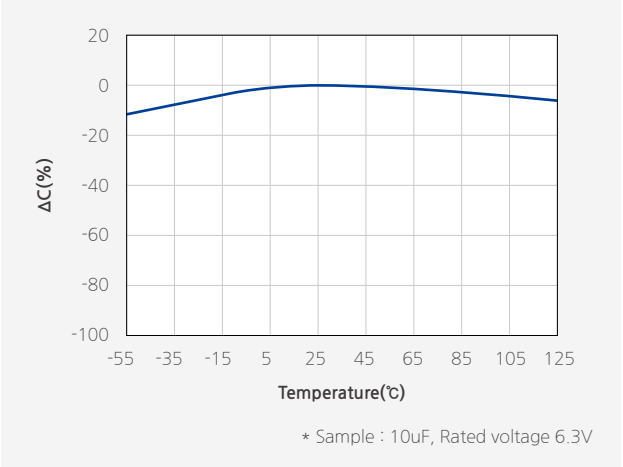

[Example of Temperature Characteristics (X7R)]

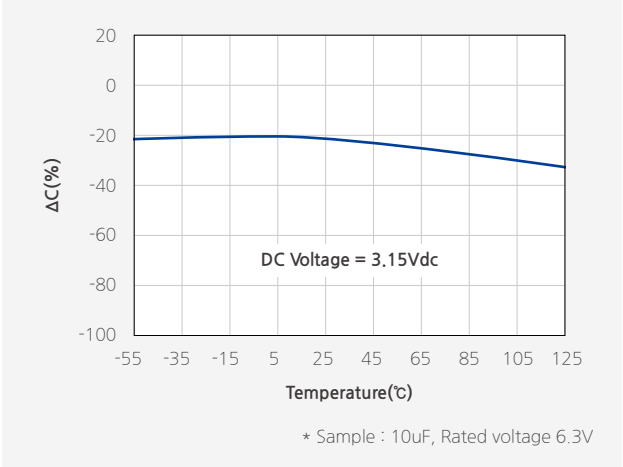

[Example of Bias TCC]

II . When selecting MLCC, it is necessary to consider the heat characteristics of a system, room temperature and TCC of MLCC, since the applied temperature may change the capacitance of MLCC.

III. In addition, Bias TCC of MLCC should be taken into account when DC voltage is applied to MLCC.

6 Self-heating Temperature

It is necessary to design the system, with considering self-heating generated by the ESR (Equivalent Series Resistance) of MLCC when AC voltage or pulse voltage is applied to MLCC.

I . When MLCC is used in an AC voltage or pulse voltage circuit, self-heating is generated when AC or pulse current flows through MLCC. Short-circuit may be occurred by the degradation of MLCC's insulating properties.

II . The reliability of MLCC may be affected by MLCC being used in an AC voltage or pulse voltage circuit, even the AC voltage or the pulse voltage is within the range of rated voltage. Therefore, make sure to check the following conditions.

1) The surface temperature of MLCC must stay within the maximum operating temperature after AC or Pulse voltage is applied.
2) The rise in increase by self-heating of MLCC must not exceed 20℃
(Applicable to Rated Voltage of less than 100Vdc)

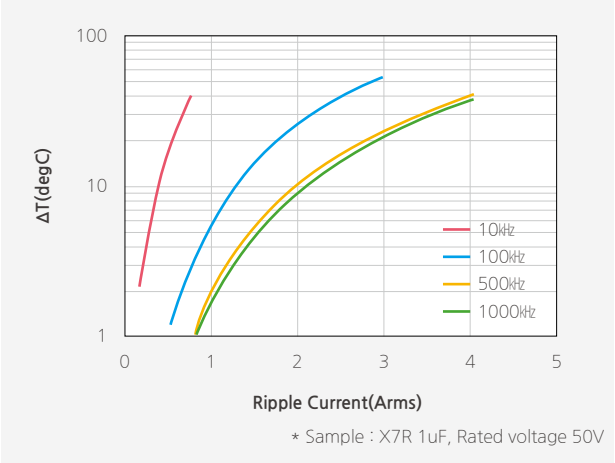

[Example of Ripple current]

Caution/Notice

7 DC & AC Voltage Characteristics

It is required to consider voltage characteristics in the circuit since the capacitance value of high dielectric constant MLCC(ClassⅡ) is changed by applied DC & AC voltage.

Ⅰ. Please ensure the capacitance change is within the allowed operating range of a system. In particular, when high dielectric constant type MLCC (ClassⅡ) is used in circuit with narrow allowed capacitance tolerance, a system should be designed with considering DC voltage, temperature characteristics and aging characteristics of MLCC.

Ⅱ. It is necessary to consider the AC voltage characteristics of MLCC and the AC voltage of a system, since the capacitance value of high dielectric constant type MLCC (ClassⅡ) varies with the applied AC voltage.

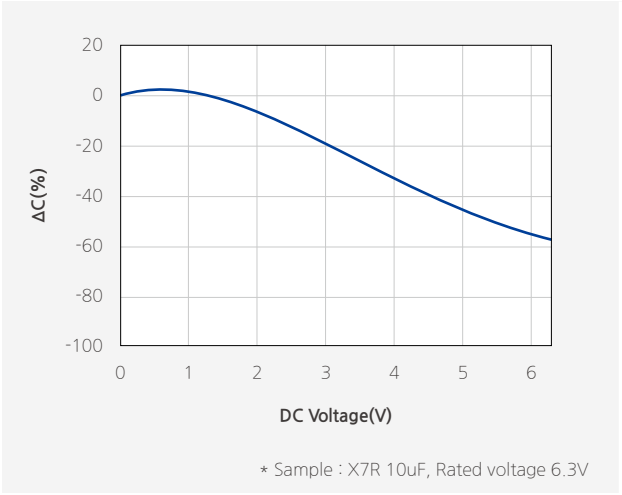

[Example of DC Bias characteristics]

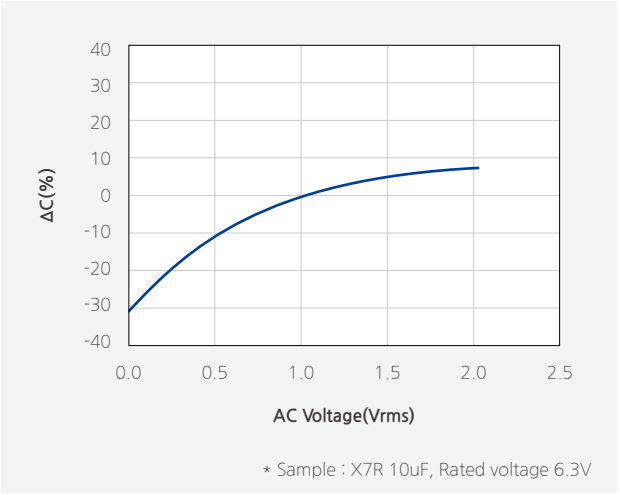

[Example of AC voltage characteristics]

Caution/Notice

8 Impedance Characteristic

Electrical impedance (Z) of MLCC is the measurement of the opposition that MLCC presents to a current (I) when a voltage (V) is applied. It is defined as the ratio of the voltage to the current (Z=V/I). Impedance extends the concept of resistance to AC circuits and is a complex number consisting of the real part of resistance (R) and the imaginary part of reactance (X) as Z=R+jX. Therefore, it is required to design circuit with consideration of the impedance characteristics of MLCC based on the frequency (Z=R+jX)

I. MLCC operates as a capacitor in the low frequency and its reactance (XC) decreases as frequency increases ($X_C=1/j2\pi fC$) where f is frequency and C is capacitance. The resistance (ESR; Equivalent Series Resistance) of MLCC in the low frequency mainly comes from the loss of its dielectric material.

II. MLCC operates as an inductor in the high frequency and the inductance of MLCC is called ESL (Equivalent Series Inductance). The reactance (XL) of MLCC in the high frequency increases as frequency increases ($X_L=j2\pi f \cdot ESL$). The resistance (ESR) of MLCC in the high frequency mainly comes from the loss of its electrode metal.

III. SRF (Self Resonant Frequency) of MLCC is the frequency where its capacitive reactance (XC) and inductive reactance (XL) cancel each other and the impedance of MLCC has only ESR at SRF.

IV. The impedance of MLCC can be measured by a network analyzer or an impedance analyzer. When using the network analyzer, please note that the small-signal input may lead to the impedance of low capacitance caused by the AC voltage characteristic of MLCC.

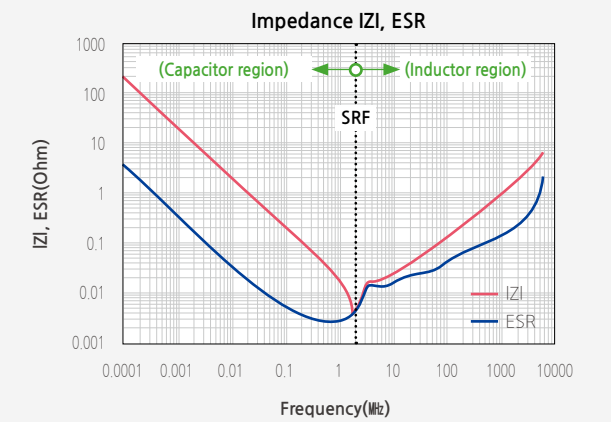

[Example of Impedance characteristics]

Caution/Notice

Electrical & Mechanical Caution

1 Applied Voltage

The actual applied voltage on MLCC should not exceed the rated voltage set in the specifications.

Ⅰ. Cautions by types of voltage applied to MLCC

- For DC voltage or DC+AC voltage, DC voltage or the maximum value of DC + AC voltage should not exceed the rated voltage of MLCC.
- For AC voltage or pulse voltage, the peak-to-peak value of AC voltage or pulse voltage should not exceed the rated voltage of MLCC.
- Abnormal voltage such as surge voltage, static electricity should not exceed the rated voltage of MLCC.

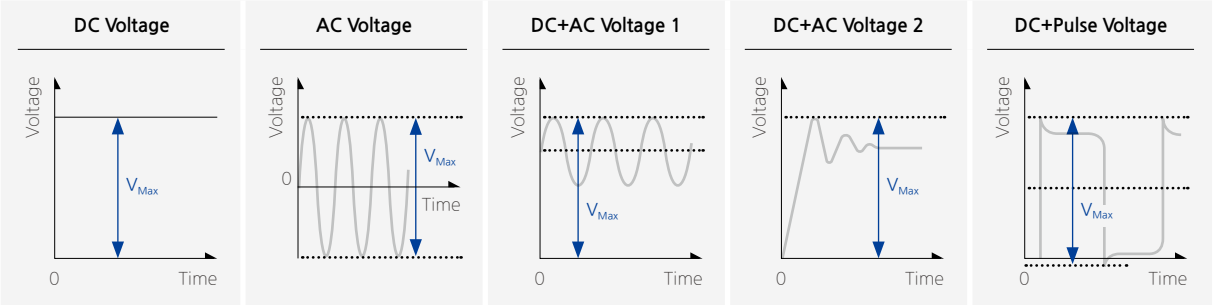

[Types of Voltage Applied to the Capacitor]

Ⅱ. Effect of EOS (Electrical Overstress)

- Electrical Overstress can cause damages to MLCC, resulting in the electrical short failure caused by the dielectric breakdown in MLCC.
- Down time of MLCC is varied with the applied voltage and the room temperature and a dielectric shock caused by EOS can accelerate heating on the dielectric. Therefore, it can bring about a failure of MLCC in a market at the early stage.
- Please use caution not to apply excessive electrical overstress including spike voltage MLCC when preparing MLCC for testing or evaluating.

2 Vibration

Please check the types of vibration and shock, and the status of resonance. Manage MLCC not to generate resonance and avoid any kind of impact to terminals. When MLCC is used in a vibration environment, please make sure to contact us for the situation and consider special MLCC such as Soft-term, etc.

3 Shock

Mechanical stress caused by a drop may cause damages to a dielectric or a crack in MLCC. Do not use a dropped MLCC to avoid any quality and reliability deterioration. When piling up or handling printed circuit boards, do not hit MLCC with the corners of a PCB to prevent cracks or any other damages to the MLCC.

4 Piezo-electric Phenomenon

MLCC may generate a noise due to vibration at specific frequency when using the high dielectric constant MLCC (Class Ⅱ) at AC or Pulse circuits. MLCC may cause a noise if MLCC is affected by any mechanical vibrations or shocks

Caution/Notice

Process of Mounting and Soldering

1 Mounting

Ⅰ. Mounting position

It is recommended to locate the major axis of MLCC in parallel to the direction in which the stress

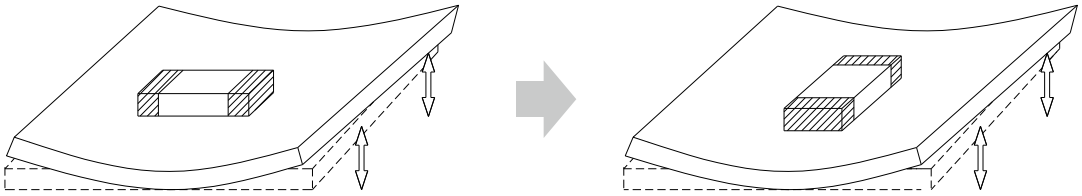

Not recommended　　Recommended

Ⅱ. Cautions during mounting near the cutout

Please take the following measures to effectively reduce the stress generated from the cutting of PCB. Select the mounting location shown below, since the mechanical stress is affected by a location and a direction of MLCC mounted near the cutting line.

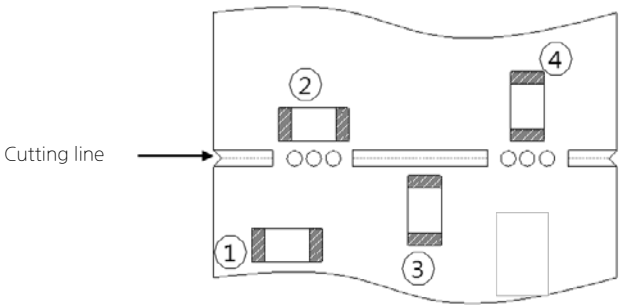

※ Relative mechanical stress
② > ①
③ > ①
④ > ①

Ⅲ. Cautions during mounting near screw

If MLCC is mounted near a screw hole, the board deflection may be occurred by screw torque. Mount MLCC as far from the screw holes as possible.

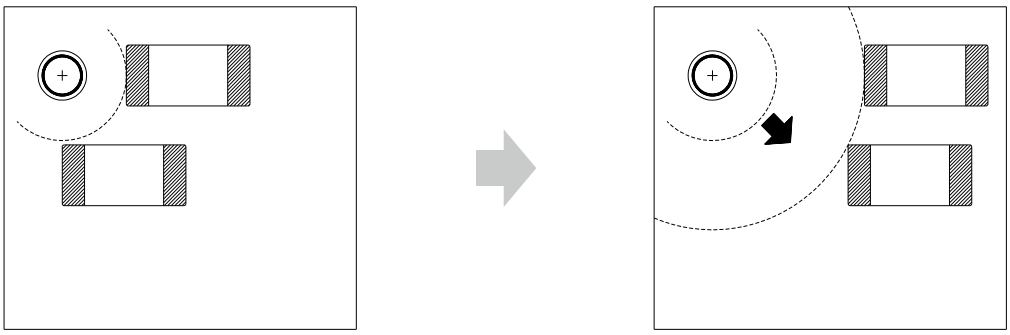

Not recommended　　Recommended

Caution/Notice

2 Caution before Mounting

I. It is recommended to store and use MLCC in a reel. Do not re-use MLCC that was isolated from the reel.

II. Check the capacitance characteristics under actual applied voltage.

III. Check the mechanical stress when actual process and equipment is in use.

IV. Check the rated capacitance, rated voltage and other electrical characteristics before assembly. Heat treatment must be done prior to measurement of capacitance.

V. Check the solderability of MLCC that has passed shelf life before use.

VI. The use of Sn-Zn based solder may deteriorate the reliability of MLCC.

3 Cautions during Mounting with Mounting (pick-and-place) Machines

I. Mounting Head Pressure

Excessive pressure may cause cracks in MLCC. It is recommended to adjust the nozzle pressure within the maximum value of 300g.f. Additional conditions must be set for both thin film and special purpose MLCC.

II. Bending Stress

When using a two-sided substrate, it is required to mount MLCC on one side first before mounting on the other side due to the bending of the substrate caused by the mounting head.

Support the substrate as shown in the picture below when MLCC is mounted on the other side. If the substrate is not supported, bending of the substrate may cause cracks in MLCC.

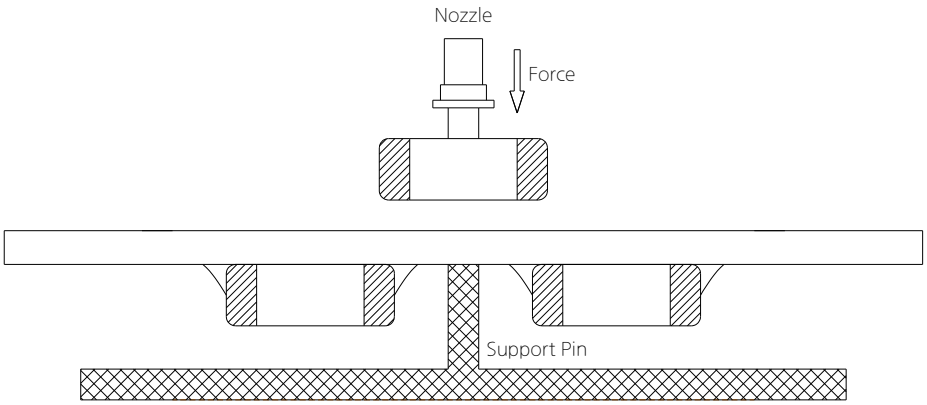

III. Suction nozzle

Dust accumulated in a suction nozzle and suction mechanism can impede a smooth movement of the nozzle. This may cause cracks in MLCC due to the excessive force during mounting. If the mounting claw is worn out, it may cause cracks in MLCC due to the uneven force during positioning. A regular inspection such as maintenance, monitor and replacement for the suction nozzle and mounting claw should be conducted.

Caution/Notice

4 Reflow soldering

MLCC is in a direct contact with the dissolved solder during soldering, which may be exposed to potential mechanical stress caused by the sudden temperature change. Therefore, MLCC may be contaminated by the location movement and flux. For the reason, the mounting process must be closely monitored.

Method		Classification
Reflow soldering	Overall heating	Infrared rays
		Hot plate
		VPS(Vapor phase)
	Local heating	Air heater
		Laser
		Light beam

Ⅰ. Reflow Profile

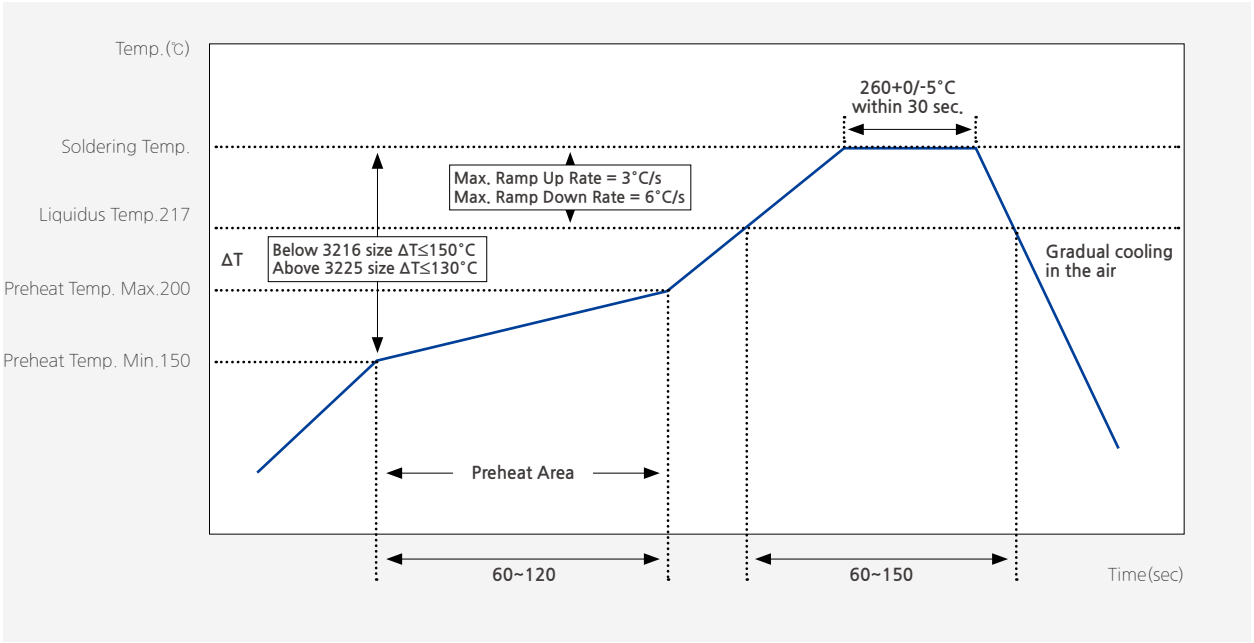

[Reflow Soldering Conditions]

Use caution not to exceed the peak temperature (260℃) and time (30sec) as shown. Pre-heating is necessary for all constituents including the PCB to prevent the mechanical damages on MLCC. The temperature difference between the PCB and the component surface must be kept to the minimum.

As for reflow soldering, it is recommended to keep the number of reflow soldering to less than three times. Please check with us when the number of reflow soldering needs to exceed three times. Care must be exercised especially for the ultra-small size, thin film and high capacitance MLCC as they can be affected by thermal stress more easily.

Caution/Notice

II. Reflow temperature

The following quality problem may occur when MLCC is mounted with a lower temperature than the reflow temperature recommended by a solder manufacturer. The specified peak temperature must be maintained after taking into consideration the factors such as the placement of peripheral constituent and the reflow temperature.

- Drop in solder wettability
- Solder voids
- Potential occurrence of whisker
- Drop in adhesive strength
- Drop in self-alignment properties
- Potential occurrence of tombstones

III. Cooling

Natural cooling with air is recommended.

IV. Optimum solder flux for reflow soldering

- Overly the thick application of solder pastes results in an excessive solder fillet height. This makes MLCC more vulnerable to the mechanical and thermal stress from the board, which may cause cracks in MLCC.
- Too little solder paste results in a lack of the adhesive strength, which may cause MLCC to isolate from PCB
- Check if solder has been applied uniformly after soldering is completed.

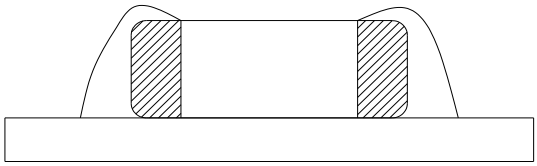

Too Much Solder
large stress may cause cracks

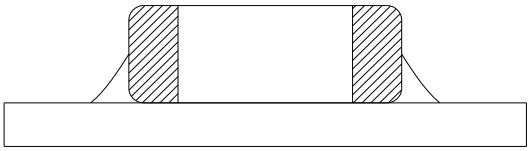

Not enough solder
Weak holding force may cause bad
connections or detaching of the capacitor

- It is required to design a PCB with consideration of a solder land pattern and its size to apply an appropriate amount of solder to MLCC. The amount of the solder at the edge may impact directly on cracks in MLCC.

Caution/Notice

5 Flow soldering

Ⅰ. Flow profile

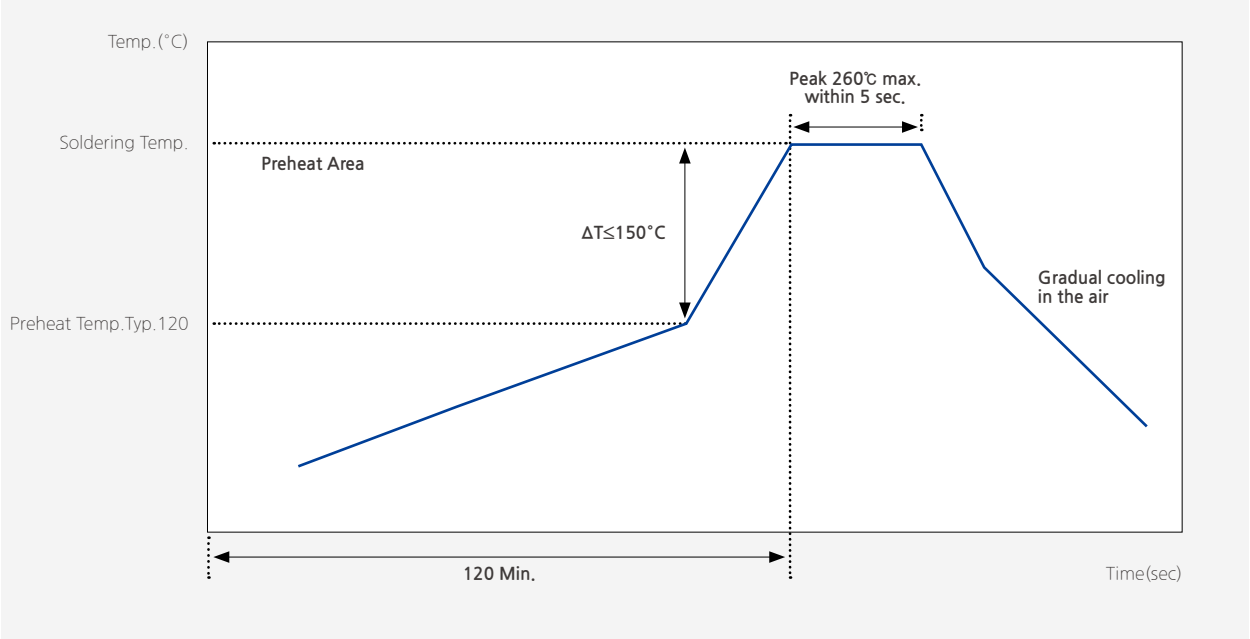

[Flow Soldering Conditions]

Take caution not to exceed peak temperature (260℃) and time (5sec) as shown.
Please contact us before use the type of high capacitance and thin film MLCC for some exceptions that may be caused.

Ⅱ. Caution before Flow soldering

- When a sudden heat is applied to MLCC, the mechanical rigidity of MLCC is deteriorated by the internal deformation of MLCC. Preheating all the constituents including PCB is required to prevent the mechanical damages on MLCC. The temperature difference between the solder and the surface of MLCC must be kept to the minimum.
- If the flow time is too long or the flow temperature is too high, the adhesive strength with PCB may be deteriorated by the leaching phenomenon of the outer termination, or the capacitance value may be dropped by weak adhesion between the internal termination and the outer termination.

Caution/Notice

6 Soldering Iron

Manual soldering can pose a great risk on creating thermal cracks in MLCC. The high temperature soldering iron tip may come into a direct contact with the ceramic body of MLCC due to the carelessness of an operator. Therefore, the soldering iron must be handled carefully, and close attention must be paid to the selection of the soldering iron tip and to temperature control of the tip.

Ⅰ. How to use a soldering Iron

- In order to minimize damages on MLCC, preheating MLCC and PCB is necessary. A hot plate and a hot air type preheater should be used for preheating
- Do not cool down MLCC and PCB rapidly after soldering.
- Keep the contact time between the outer termination of MLCC and the soldering iron as short as possible. Long soldering time may cause problems such as adhesion deterioration by the leaching phenomenon of the outer termination.

Variation of Temp.	Soldering Temp.(℃)	Pre-heating Time(sec)	Soldering Time(sec)	Cooling Time(sec)
ΔT≤130	300±10℃ max	≥60, @150℃	≤4	-

* Control Δ T in the solder iron and preheating temperature.

Condition of Iron facilities		
Wattage	Tip diameter	Soldering time
20W max	3㎜ max	4sec max

* Caution - Iron tip should not contact with ceramic body directly
Lead-free solder: Sn-3.0Ag-0.5CU

Ⅱ. Cautions for re-work

- Too much solder amount will increase the risk of PCB bending or cause other damages.
- Too little solder amount will result in MLCC breaking loose from the PCB due to the inadequate adhesive strength.
- Check if the solder has been applied properly and ensure the solder fillet has a proper shape.

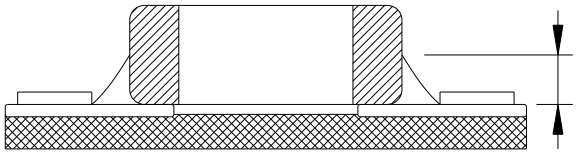

* Soldering wire below ø0.5mm is required for soldering.

7 Cleaning

Ⅰ. In general, cleaning is unnecessary if rosin flux is used.

When acidic flux is used strongly, chlorine in the flux may dissolve into some types of cleaning fluids, thereby affecting the performance of MLCC. This means that the cleansing solution must be carefully selected and should always be new.

Ⅱ. Cautions for cleaning

MLCC or solder joint may be cracked with the vibration of PCB, if ultrasonic vibration is too strong during cleaning. When high pressure cleaning equipment is used, test should be done for the cleaning equipment and its process before the cleaning in order to avoid damages on MLCC.

Caution/Notice

8 Cautions for using electrical measuring probes

- Confirm the position of the support pin or jig when checking the electrical performance of MLCC after mounting on the PCB.
- Watch for PCB bending caused by the pressure of a test-probe or other equipment.
- If the PCB is bent by the force from the test probe, MLCC may be cracked or the solder joint may be damaged.
- Avoid PCB flexing by using the support pin on the back side of the PCB.
- Place equipment with the support pin as close to the test-probe as possible.
- Prevent shock vibrations of the board when the test-probe contacts a PCB.

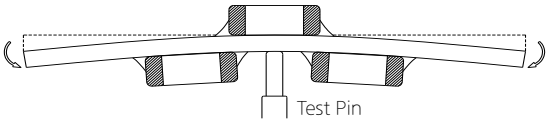

Not recommended

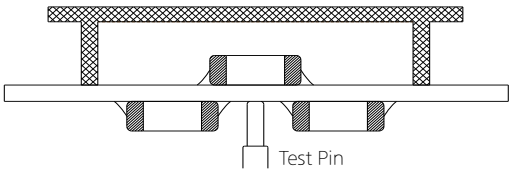

Recommended

9 Printed Circuit Board Cropping

- Do not apply any stress to MLCC such as bending or twisting the board after mounting MLCC on the PCB.
- The stress as shown may cause cracks in MLCC when cutting the board.
- Cracked MLCC may cause degradation to the insulation resistance, thereby causing short circuit.
- Avoid these types of stresses applied to MLCC.

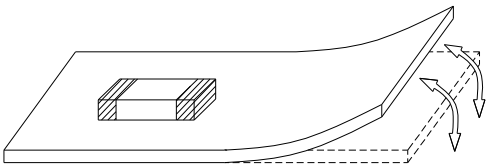

[Bending]

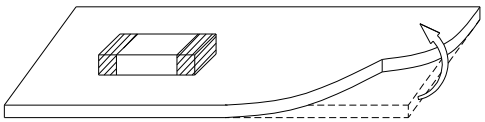

[Twisting]

Ⅰ. Cautions for cutting PCB

Check a cutting method of PCB in advance.

The high density board is separated into many individual boards after the completion of soldering. If the board is bent or deformed during separation, MLCC may be cracked. Carefully select a separation method that minimizes the deformation of the PCB.

Caution/Notice

10 Assembly Handling

Ⅰ. Cautions for PCB handling

Hold the edges of the board mounted with MLCC with both hands since holding with one hand may bend the board. Do not use dropped boards, which may degrade the quality of MLCC.

Ⅱ. Mounting other components

Pay attention to the following conditions when mounting other components on the back side of The board after MLCC has been mounted on the front side. When the suction nozzle is placed too close to the board, board deflection stress may be applied to MLCC on the back side, resulting in cracks in MLCC. Check if proper value is set on each chip mounter for a suction location, a mounting gap and a suction gap by the thickness of components.

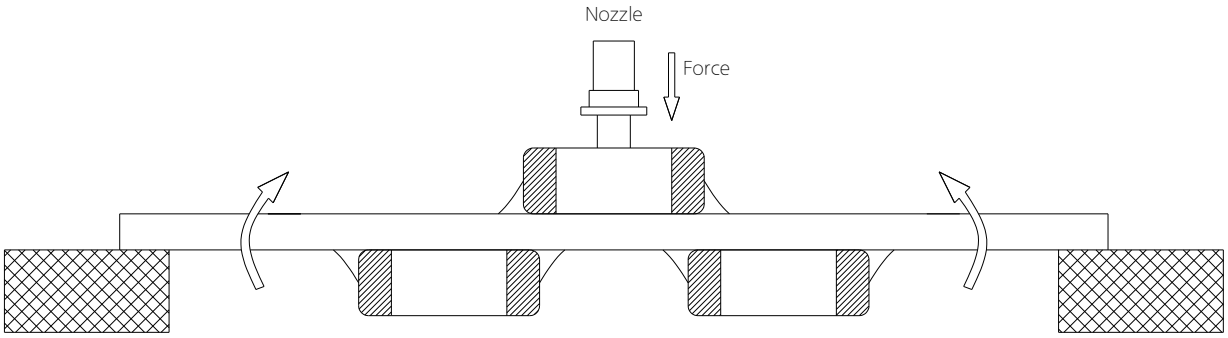

Ⅲ. Board mounting components with leads

If the board is bent when inserting components (transformer, IC, etc.) into it, MLCC or solder joint may be cracked.

Pay attention to the following:

- Reduce the stress on the board during insertion by increasing the size of the lead insertion hole.
- Insert components with leads into the board after fixing the board with support pins or a dedicated jig.
- Support the bottom side of the board to avoid bending the board.
- Check the status of the height of each support pin regularly when the support pins are used.

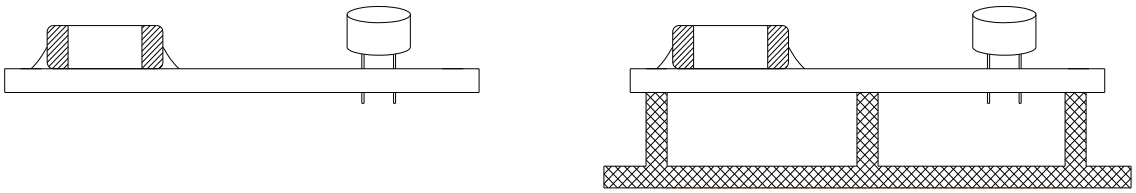

Not recommended

Recommended

Caution/Notice

Ⅳ. Socket and / or connector attach / detach

Since the insertion or removal from sockets and connectors may cause the board to bent, make sure that MLCC mounted on the board should not be damaged in this process.

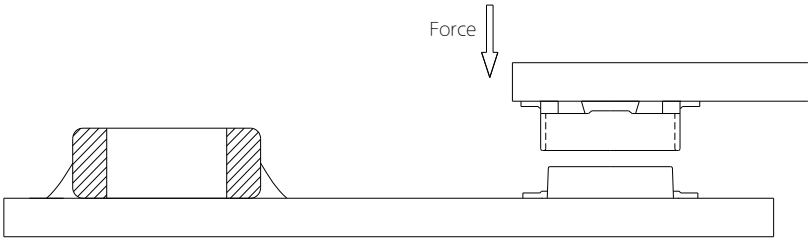

Ⅴ. Fastening screw

When attaching a shield on a board, the board may be bent during a screw tightening work.

Pay attention to the following conditions before performing the work.

- Plan the work to prevent the board from bending.
- Use a torque driver to prevent over-tightening of the screw.
- Since the board may be bent by soldering, use caution in tightening the screw.

11 Adhesive selection

Pay attention to the following if an adhesive is used to position MLCC on the board before soldering.

Ⅰ. Requirements for Adhesives

- They must have enough adhesive strength to prevent MLCC from slipping or moving during the handling the board.
- They must maintain their adhesive strength when exposed to soldering temperatures.
- They should not spread when applied to the PCB.
- They should have a long pot life.
- They should hardened quickly.
- They should not corrode the board or MLCC materials.
- They should be an insulator type that does not affect the characteristic of MLCC.
- They should be non-toxic, not harmful, and particularly safe when workers touch the adhesives.

Caution/Notice

II. Caution before Applying Adhesive

Check the correct application conditions before attaching MLCC to the board with an adhesive. If the dimension of land, the type of adhesives, the amount of coating, the contact surface areas, the curing temperature, or other conditions are not appropriate, it may degrade the MLCC performance.

III. Cautions for selecting Adhesive

Depending on the type of the chosen adhesive, MLCC insulation resistance may be degraded. In addition, MLCC may be cracked by the difference in contractile stress caused by the different contraction rate between MLCC and the adhesive.

IV. Cautions for the amount of applied adhesive and curing temperature

- The inappropriate amount of the adhesive cause the weak adhesive strength, resulting in the mounting defect in MLCC.
- Excessive use of the adhesive may cause a soldering defect, loss of electrical connection, incorrect curing, or slippage of a mounting position, thereby an inflow of the adhesive onto the land section should be avoided.
- If the curing temperature is too high or the curing time is too long, the adhesive strength will be degraded. In addition, oxidation both on the outer termination (Sn) of MLCC and the surface of the board may deteriorate the solderability.

12 Flux

I. The excessive amount of flux generates excessive flux gases which may deteriorate solderability. Therefore, apply the flux thin and evenly as a whole.

II. Flux with a high ratio of halogen may oxidize the outer termination of MLCC, if cleaning is not done properly. Therefore, use flux with a halogen content of 0.1% max.

III. Strong acidic flux can degrade the MLCC performance.

IV. Check the solder quality of MLCC and the amount of remaining flux surrounding MLCC after the mounting process.

13 Coating

I. Crack caused by Coating

A crack may be caused in the MLCC due to amount of the resin and stress of thermal contraction of the resin during coating process. During the coating process, the amount of resin and the stress of thermal contraction of the resin may cause cracks in MLCC. The difference of thermal expansion coefficient between the coating, or a molding resin may cause destruction, deterioration of insulation resistance or dielectric breakdown of MLCC such as cracks or detachment, etc.

II. Recommended Coating material

- A thermal expansion coefficient should be as close to that of MLCC as possible.
- A silicone resin can be used as an under-coating to buffer the stress.
- The resin should have a minimum curing contraction rate.
- The resin should have a minimum sensitivity (ex. Epoxy resin).
- The insulation resistance of MLCC can be deteriorated if a high hygroscopic property resin is used in a high humidity condition.
- Do not use strong acid substances due to the fact that coating materials inducing a family of halogen substances and organic acid may corrode MLCC.

Caution/Notice

Design

1 Circuit design

When the board is dropped or bent, MLCC mounted on the board may be short-circuited by the drop in insulation resistance. Therefore, it is required to install safety equipment such as a fuse to prevent additional accidents when MLCC is short-circuited, otherwise, electric short and fire may occur. This product is not a safety guaranteed product.

2 PCB Design

I. Unlike lead type components, SMD type components that are designed to be mounted directly on the board are fragile to the stress. In addition, they are more sensitive to mechanical and thermal stress than lead type components.

II. MLCC crack by PCB material type

A great difference of the thermal expansion coefficient between PCB and MLCC causes thermal expansion and contraction, resulting in cracks in MLCC. Even though MLCC is mounted on a board with a fluorine resin or on a single-layered glass epoxy, cracks in MLCC may occur.

3 Design system evaluation

I. Evaluate the actual design with MLCC to make sure there is no functional issue or violation of specifications of the finished goods.

II. Please note that the capacitance may differ based on the operating condition of the actual system since Class 2 MLCC capacitance varies with applied voltage and temperature.

III. Surge resistance must be evaluated since the excessive surge caused by the inductance of the actual system may apply to MLCC.

IV. Note the actual MLCC size and the termination shape.

4 Land dimension

The recommended land dimension is determined by evaluating the actual SET and a board.

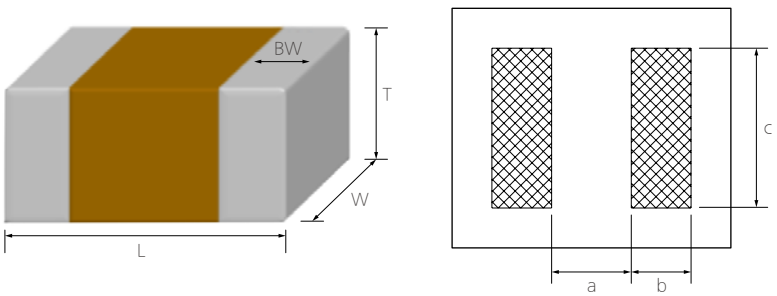

Caution/Notice

Reflow Footprint

Chip Size (mm)	Chip Tol. (mm)	a (mm)	b (mm)	c (mm)	(a+2b) min	(a+2b) max
0201	± 0.013	0.07~0.08	0.09~0.14	0.125~0.135	0.25	0.36
	± 0.03	0.07~0.09	0.10~0.15	0.135~0.145	0.27	0.39
0402	± 0.02	0.14~0.18	0.19~0.23	0.20~0.24	0.52	0.64
	± 0.05	0.15~0.19	0.20~0.24	0.23~0.27	0.55	0.67
05025	± 0.025	0.18~0.22	0.24~0.28	0.25~0.29	0.66	0.78
0603	± 0.03	0.22~0.28	0.31~0.37	0.30~0.36	0.84	1.02
	± 0.05	0.23~0.29	0.32~0.38	0.32~0.38	0.87	1.05
	± 0.07	0.24~0.30	0.32~0.38	0.35~0.40	0.88	1.06
	± 0.09	0.25~0.31	0.33~0.39	0.36~0.42	0.91	1.09
1005	± 0.05	0.36~0.44	0.49~0.57	0.51~0.59	1.34	1.58
	± 0.07	0.37~0.45	0.49~0.57	0.53~0.61	1.35	1.59
	± 0.10	0.38~0.46	0.50~0.58	0.56~0.64	1.38	1.62
	± 0.15	0.40~0.48	0.52~0.60	0.61~0.69	1.44	1.68
	± 0.20	0.42~0.50	0.53~0.61	0.66~0.74	1.48	1.72
	± 0.25	0.44~0.52	0.55~0.63	0.71~0.79	1.54	1.78
	± 0.30	0.45~0.53	0.56~0.64	0.76~0.84	1.57	1.81
	± 0.40	0.49~0.57	0.59~0.67	0.86~0.94	1.67	1.91
1608	± 0.10	0.63~0.73	0.71~0.81	0.80~0.90	2.05	2.35
	± 0.15	0.65~0.75	0.73~0.83	0.90~1.00	2.11	2.41
	± 0.20	0.67~0.77	0.74~0.84	0.95~1.05	2.15	2.45
	± 0.25	0.69~0.79	0.76~0.86	1.00~1.10	2.21	2.51
	± 0.30	0.71~0.81	0.77~0.87	1.05~1.15	2.25	2.55
2012	±0.10	0.79~0.89	0.88~0.98	1.25~1.35	2.55	2.85
	±0.15	0.81~0.91	0.90~1.00	1.30~1.40	2.61	2.91
	±0.20	0.83~0.93	0.91~1.01	1.35~1.45	2.65	2.95
	±0.25	0.85~0.95	0.93~1.03	1.40~1.50	2.71	3.01
	±0.30	0.89~0.97	0.94~1.04	1.45~1.55	2.75	3.05
3216	±0.20	1.64~1.76	1.19~1.31	1.74~1.86	4.02	4.38
	±0.30	1.69~1.81	1.22~1.34	1.84~1.96	4.13	4.49
3225	±0.20	1.64~1.76	1.29~1.41	2.64~2.76	4.22	4.58
	±0.30	1.69~1.81	1.32~1.44	2.74~2.86	4.33	4.69
4532	±0.40	2.17~2.33	1.75~1.91	3.42~3.58	5.67	6.15
5750	±0.40	2.75~2.95	2.03~2.23	5.30~5.50	6.81	7.41

Caution/Notice

Flow Footprint

Chip Size (mm)	Chip Tol. (mm)	a (mm)	b (mm)	c (mm)	(a+2b) min	(a+2b) max	Wmin	Wmax
1005	± 0.05	0.55~0.65	0.70~0.80	0.55~0.65	1.95	2.25	0.55	0.65
	± 0.07	0.55~0.65	0.70~0.80	0.55~0.65	1.95	2.25	0.55	0.65
	± 0.10	0.55~0.65	0.70~0.80	0.60~0.70	1.95	2.25	0.60	0.70
	± 0.15	0.55~0.65	0.70~0.80	0.60~0.70	1.95	2.25	0.60	0.70
	± 0.20	0.60~0.70	0.70~0.80	0.65~0.75	2.00	2.30	0.65	0.75
	± 0.25	0.60~0.70	0.70~0.80	0.65~0.75	2.00	2.30	0.65	0.75
1608	± 0.10	0.90~1.00	0.80~0.90	0.90~1.00	2.50	2.80	0.90	1.00
	± 0.15	0.90~1.00	0.85~0.95	0.90~1.00	2.60	2.90	0.90	1.00
	± 0.20	0.90~1.00	0.85~0.95	0.95~1.05	2.60	2.90	0.95	1.05
	± 0.25	0.95~1.05	0.85~0.95	0.95~1.05	2.65	2.95	0.95	1.05
	± 0.30	0.95~1.05	0.85~0.95	1.00~1.10	2.65	2.95	1.00	1.10
2012	± 0.10	1.00~1.10	1.05~1.15	1.30~1.40	3.10	3.40	1.30	1.40
	± 0.15	1.05~1.15	1.05~1.15	1.30~1.40	3.15	3.45	1.30	1.40
	± 0.20	1.05~1.15	1.05~1.15	1.35~1.45	3.15	3.45	1.35	1.45
	± 0.25	1.05~1.15	1.10~1.20	1.35~1.45	3.25	3.55	1.35	1.45
	± 0.30	1.05~1.15	1.10~1.20	1.40~1.50	3.25	3.55	1.40	1.50
	± 0.35	1.05~1.15	1.10~1.20	1.40~1.50	3.25	3.55	1.40	1.50
3216	± 0.15	2.00~2.10	1.40~1.50	1.70~1.80	4.80	5.10	1.70	1.80
	± 0.20	2.00~2.10	1.40~1.50	1.75~1.85	4.80	5.10	1.75	1.85
	± 0.30	2.05~2.15	1.40~1.50	1.80~1.90	4.85	5.15	1.80	1.90
3225	± 0.30	1.90~2.00	1.55~1.65	2.70~2.80	5.00	5.30	2.70	2.80
	± 0.40	1.95~2.05	1.55~1.65	2.75~2.85	5.05	5.35	2.75	2.85

Caution/Notice

Others

1 Storage environment

Ⅰ. Recommendation for temperature/humidity

Even taping and packaging materials are designed to endure a long-term storage, they should be stored with a temperature of 0~40˚C and an RH of 0~70% otherwise, too high temperatures or humidity may deteriorate the quality of the product rapidly.

As oxidization is accelerated when relative humidity is above 70%RH, the lower the humidity is, the better the solderability is. As the temperature difference may cause dew condensation during the storage of the product, it is a must to maintain a temperature control environment

Ⅱ. Shelf Life

An allowable storage period should be within 6 months from the outgoing date of delivery in consideration of solderability. As for products in storage over 6 months, please check solderability before use.

2 Caution for corrosive environment

As corrosive gases may deteriorate the solderability of MLCC outer termination, it is a must to store MLCC in an environment without gases. MLCC that is exposed to corrosive gases may cause its quality issues due to the corrosion of plating layers and the penetration of moisture.

3 Equipment in operation

Ⅰ. Do not touch MLCC directly with bare hands to prevent an electric shock or damage.

Ⅱ. The termination of MLCC shall not be contacted with a conductive object (short -circuit). Do not expose MLCC to conductive liquid containing acidic or alkaline material.

Ⅲ. Do not use the equipment in the following conditions.

(1) Exposure to water or oil
(2) Exposure to direct sunlight
(3) Exposure to Ozone or ultra-violet radiation.
(4) Exposure to corrosive gas (e.g. hydrogen sulfide, sulfur dioxide, chlorine, ammonia gas)
(5) Exposure to vibration or mechanical shock exceeding specified limit
(6) Exposure to high humidity

Ⅳ. If the equipment starts generating any smoke, fire or smell, immediately switch it off or unplug from the power source. If the equipment is not switched off or unplugged, serious damage may occur due to the continuous power supply. Please be careful with the high temperature in this condition.

4 Waste treatment

In case of scrapping MLCC, it is incinerated or buried by a licensed industrial waste company. When scrapping MLCC, it is recommended to incinerate or bury the scrappage by a licensed industrial waste company.

Caution/Notice

5 Operating temperature

The operating temperature limit is determined by the specification of each models.

I. Do not use MLCC over the maximum operating temperature. Pay attention to equipment's temperature distribution and the seasonal fluctuation of ambient temperature.

II. The surface temperature of MLCC cannot exceed the maximum operating temperature including self-heating effects.

6 Transportation

The performance of MLCC may be affected by transportation conditions.

I. MLCC shall be protected from excessive temperature, humidity and a mechanical force during transportation. During transportation, the cartons shall not be deformed and the inner packaging shall be protected from excessive external forces.

II. Do not apply excessive vibrations, shocks or excessive forces to MLCC.

- If excessive mechanical shock or stress are applied, MLCC's ceramic body may crack.
- When the surface of MLCC is hit with the sharp edge of an air driver, a soldering iron, or a tweezer, etc, MLCC may crack or become short-circuited.

III. MLCC may crack and become non-functional due to the excessive shocks or dropping during transportation.

7 Notice

Some special products are excluded from this document. Please be advised that this is a standard product specification for a reference only. We may change, modify or discontinue the product specifications without notice at any time. So, you need to approve the product specifications before placing an order. Should you have any question regarding the product specifications, please contact our sales personnel or application engineers.

Caution/Notice

Caution of Application

Disclaimer

All product specifications, statements, information and data (collectively, the “Information”) in this spec sheet or made available on the website are subject to change.

The customer is responsible for checking and verifying the extent to which the Information contained in this publication is applicable to an order at the time the order is placed.

All Information given herein is believed to be accurate and reliable, but it is presented without guarantee, warranty, or responsibility of any kind, expressed or implied.

ANY USE OF PRODUCT OUTSIDE OF SPECIFICATIONS OR ANY STORAGE OR INSTALLATION INCONSISTENT WITH PRODUCT GUIDANCE VOIDS ANY WARRANTY.

Although Samsung Electro-Mechanics designs and manufactures its products to the most stringent quality and safety standards, given the current state of the art, isolated component failures may still occur.

Accordingly, customer applications which require a high degree of reliability or safety should employ suitable designs or other safeguards (such as installation of protective circuitry or redundancies)

in order to ensure that the failure of an electrical component does not result in a risk of personal injury or property damage. Although all product-related warnings, cautions and notes must be observed, the customer should not assume that all safety measures are indicted or that other measures may not be required.

Limitation

Please contact us with usage environment information such as voltage, current, temperature, or other special conditions before using our products for the applications listed below. The below application conditions require especially high reliability products to prevent defects that may directly cause damages or loss to third party’s life, body or property.

If you have any questions regarding this ‘Limitation’, you should first contact our sales personnel or application engineers.

① Aerospace/Aviation equipment
② Military equipment
③ Atomic energy-related equipment
④ Undersea equipment
⑤ Medical equipment
⑥ Disaster prevention/crime prevention equipment
⑦ Power plant control equipment
⑧ Traffic signal equipment
⑨ Data-processing equipment
⑩ Electric heating apparatus, burning equipment
⑪ Safety equipment
⑫ Any other applications with the same as or similar complexity or reliability to the applications

Component Sales Offices

Head Office

150, Maeyeong-ro, Yeongtong-gu, Suwon-si, Gyeonggi-do, Republic of Korea
Tel +82-31-210-5114 (Main Number)

America

San Jose
Samsung Electro Mechanics America Inc. (HQ)
3655 N 1st street, San Jose CA 95134, U.S.A.
Tel +1-408-544-5454

San Diego
Samsung Electro Mechanics America Inc.(San Diego office)
5405 Morehouse Drive, Suite #220 San Diego CA 92121 USA
Tel +1-858-766-9863

Phoenix
Samsung Electro Mechanics America Inc.(Phoenix Office)
4505 E Chandler Blvd suite #105, Phoenix, AZ, 85048, U.S.A.
Tel +1-480-592-0184

Detroit
Samsung Electro Mechanics America Inc.(Detroit Office)
27777 Franklin Road Suite 1040 Southfield, MI 48034 USA
Tel +1-248-499-8830

Austin
Samsung Electro Mechanics America Inc.(Austin Office)
710 Hesters Crossing Road Suite 180 Round Rock, TX 78681 USA
Tel +1-480-216-4432

Europe

Frankfurt
Samsung Electro-Mechanics GmbH. (HQ)
Koelner Str. 12, 65760 Eschborn, Germany.
Tel +49-6196-66-3300

Munich
Samsung Electro-Mechanics GmbH. (Munich Office)
Reichenbachstrasse 2, 85737 Ismaning, Germany.
Tel +49-6196-66-7237

Stuttgart
Samsung Electro-Mechanics GmbH. (Stuttgart Office)
Leitzstrasse 45, 70469 Stuttgart, Germany.
Tel +49-7114-906-6281

Helsinki
Samsung Electro-Mechanics GmbH. (Helsinki Office)
Keilaranta 1, 02150 Espoo, Finland.
Tel +35-898-53-1132

Asia

Shenzhen
Samsung Electro-Mechanics (ShenZhen) Co.,Ltd.(HQ)
14F, Tower A, SCC Building, Junction of Houhai Blvd. and Haide 1st Rd., Nanshan Dist., Shenzhen City, China.
Tel +86-755-8608-5589

Shanghai
Samsung Electro-Mechanics Co.,Ltd. (Shanghai Branch)
13F Room 1301-1302, Tower B, SOHO Zhongshan Building, No.1065 Zhongshan West Rd., Changning Dist., Shanghai City, China.
Tel +86-21-2501-5803

Beijing
Samsung Electro-Mechanics Co.,Ltd. (Beijing Branch)
21F 2101-3, Samsung Tower, Building 1,Yard31, Jinghui Street,Chaoyang Dist, Beijing City, China.
Tel +86-10-5092-8701

Taipei
Samsung Electro-Mechanics Co.,Ltd. (Taipei Branch)
9F-1, No.399 Rueykuang Rd., Neihu Dist., Taipei City, Taiwan.
Tel +886-2-2656-8351

Singapore
Samsung Electro-Mechanics Private Limited(HQ)
3 Church Street Samsung Hub #23-01 Singapore.
Tel +65-6933-2600

Penang
Samsung Electro-Mechanics Private Limited(Penang Office)
Unit 9-06, Menara Boustead, 39 Jalan Sultan Ahmad Shah, 10050, Georgetown, Penang, Malaysia.
Tel +60-12-803-7001

New Delhi
Samsung Electro-Mechanics Private Limited(New Delhi Office)
Unit No. 606, DLF Tower A, District Center Jasola, New Delhi-110025, India
Tel +91-956-005-0310

Tokyo
Samsung Electro-Mechanics Japan Co., Ltd(HQ)
Shinagawa Grand Central Tower 9F, 2-16-4, Kounan, Minato-ku, Tokyo, Japan.
Tel +81-3-6369-6461

Manufacturing Sites

Busan Plant
333, Noksansaneopjung-ro, Gangseo-gu,
Busan, Republic of Korea
Tel +82-31-210-5114 (Main Number)

China Tianjin
No.80&96, Xiaqing Road, The west zone of
TEDA Tianjin, China 300462
Tel +86-22-6686-3333

Philippines
BLK 5&6 Calamba Premiere International Park
Brgy. Batino Calamba, Laguna Philippines
Tel +63-49-508-8300

* Suwon (R&D)

SAMSUNG
ELECTRO-MECHANICS



Mouser Electronics

Authorized Distributor

Click to View Pricing, Inventory, Delivery & Lifecycle Information:

Samsung Electro-Mechanics:

CL05B682KA5VPNC CL10B221KB8WPNC CL21C221JC61PNC CL21C682JBF1PNE CL10C060DB81PNC
CL10C080DB81PNC CL05B104KP5VPNC CL05C010CC51PNC CL05C1R8CC51PNC CL05C3R9CC51PNC
CL05C8R2DC51PNC CL10B333KC8WPNC CL10C8R2DC81PNC CL31B335KOHVPNE CL32B156KOJVPNE
CL32B226KPJVPJE CL03B102KOSVPNC CL03B102KPSVPNC CL03B102KQSVPNC CL03B103KOSVPNC
CL03B222KASVPNC CL03B332KPSVPNC CL03B332KQSVPNC CL03B472KASVPNC CL03B472KQSVPNC
CL03Y683KQSVPNC CL05B471KC5VPNC CL05B682KC5VPNC CL05B683KA54PNC CL05G101JB51PNC
CL05G4R7CB51PNC CL05Y474KP5VPJC CL10B103KO8WPNC CL10B105KB9VPJC CL10B152KC8WPJC
CL10B153KO8WPNC CL10B222KB8WPJC CL10B223KO8WPNC CL10B331KB8WPNC CL10B333KC8VPJC
CL10B333KO8WPNC CL10B474KA8VPJC CL10B474KO8VPJC CL10B683KC8VPJC CL10C5R6DB81PNC
CL10C7R5DB81PNC CL10E104KC8VPNC CL10E224KA84PNC CL10G100JC81PNC CL10G220JC81PNC
CL10G221JC81PNC CL10G470JC81PNC CL10G681JB81PNC CL10G681JC81PNC CL10Y225KA96PNC
CL10Y225KO96PJC CL10Y475KP96PJC CL10Y475KP96PNC CL10Y475KQ96PNC CL21B102KECXPNC
CL21B106KPY6PJE CL21B106KQY6PJE CL21B153KEFXPNE CL21B222KECXPNC CL21B474KCFVPJE
CL21B475KAB6PJE CL21B475KLB6PJE CL21B475KQQVPJE CL21B684KOFVPNC CL21C100JHC3PNC
CL21C101JHC3PNC CL21C220JHC3PNC CL21C221JHC3PNC CL21C471JHC1PNC CL21C561JEF1PNE
CL21C561JHF1PNE CL21E474KAF4PNE CL21E475KLBVPJE CL21G152JCC1PNC CL21G472JBC1PNC
CL21G681JBC1PNC CL21G682JBF1PNC CL21G821JCC1PNC CL21M106KOBVPJE CL21Y475KABVPJE
CL21Y475KPBVPJE CL21Z226MRYVPJF CL21Z226MRYVPNE CL31B152KHFXPNE CL31B222KHFXPNE
CL31B223KEFXPNE CL31B224KCHVPJE CL31B332KHHXPNE CL31B332KIHXPNE CL31B682KHFXPNE
CL31B683KEHVPNE CL31C100JEF3PNE CL31C100JHF3PNE CL31C100JIF3PNE CL31C151JHF1PNE